SONY

VIDEOCORDER

BVH-2000PS
BVH-2180PS

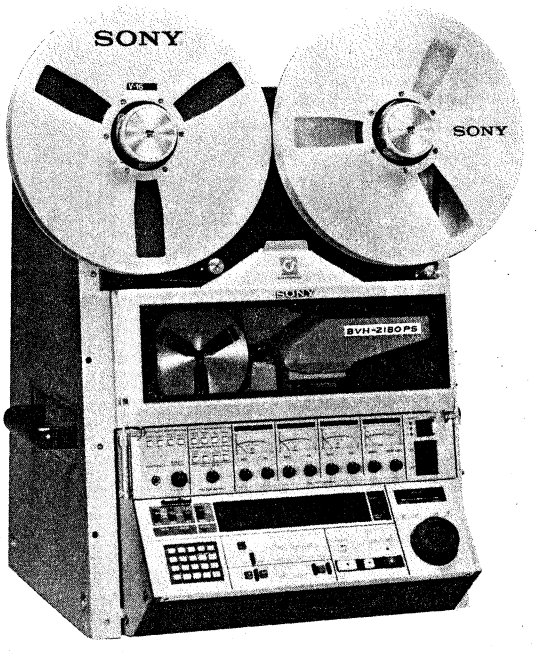

BVH-2000PS

The function control panel, side panels and handles in this photograph shown are optionally available.

Le panneau de contrôle des fonction, les panneaux latéraux et les poignées présentés sur cette photographie sont disponibles comme équipements en option.

Das hier abgebildete Bedienungspult, die Seitenteile und die Griffe sind gesondert lieferbares Zubehör.

OPERATION AND MAINTENANCE MANUAL

Volume 2 3rd Edition (Revised 9)

BVH-2000PS Serial No. 33401 and Higher

BVH-2180PS Serial No. 10001 and Higher

TABLE OF CONTENTS

Volume 1

1. OPERATION
1. FONCTIONNEMENT
1. BETRIEB
2. INSTALLATION
3. PERIODIC CHECK & MAINTENANCE
4. SERVICE INFORMATION
5. THEORY OF OPERATION
6. REPLACEMENT
7. GENERAL INFORMATION FOR ALIGNMENT
8. PREPARATION FOR ALIGNMENT
9. POWER SUPPLY ALIGNMENT
10. TAPE PATH SYSTEM ALIGNMENT
11. SERVO SYSTEM ALIGNMENT
12. AUDIO SIGNAL SYSTEM ALIGNMENT
13. VIDEO SIGNAL SYSTEM ALIGNMENT
14. DT SYSTEM ALIGNMENT

Volume 2

A. BLOCK DIAGRAMS

Audio-1 & 2 Signal System A-4
AU-27/AP/LA-02/VR/MS Boards
Audio-3 Signal System (00/02) A-7
AE-03/AP/LA-02/VR Boards
Audio-3 & 4 Signal System (04) ..... A-9(5/7)
AE-03/AP/LA-02/VR Boards
Bias/Erase A-10
BE-02/03/04 Boards

Video Signal System Overall Block Diagram (02/04) . A-13
Video Signal System Overall Block Diagram (00) ... A-16
MD-14 Board; Video Modulator A-19
DQ-02 Board; Video PB Equalizer A-25
DM-25 Board; Video Demodulator A-28
DT-05 Board; DT Control A-31

Servo System Overall Block Diagram A-37
SV-43 Board; Servo CPU A-40
RL-12 Board; Reel Servo A-43
CD-17 Board; Capstan/Drum Servo A-45
SR-15 Board; Servo Ref. Signal Generator A-47
DA-07 Board; Drum Motor Driver A-49
CA-09 Board; Capstan Motor Driver A-51
RA-05 Board; Reel Motor Driver A-53

LG-02 (A) Board; Logic A-55
SY-79 Board; System Control CPU-1 ..... A-57
SY-80 Board; System Control CPU-2 ..... A-59

Power Supply (1/2) A-61
AC-39/FV-01 Boards
Power Supply (2/2) A-63
VV-02/FV-02/PS-14 Boards

B. SEMICONDUCTOR PIN ASSIGNMENTS

Semiconductor Index B-1
Diode B-5
Transistor B-5
IC B-7
PROM B-45

C. SCHEMATIC DIAGRAMS & BOARD LAYOUT

CARD RACK

AU-27 Board; Audio-1, 2 REC EQ/PB Amp ... C-4
AE-03 Board; Audio-3 REC EQ/PB Amplifier .. C-10
EQ-02 Board; Video PB Equalizer C-16
DM-25 Board; Video Demodulator C-22
MD-14 Board; Video Modulator C-28
LG-02 Board; Logic C-34
SY-79 Board; System Control CPU-1 ..... C-40
SY-80 Board; System Control CPU-2 ..... C-52
SV-43 Board; Servo CPU C-58
RL-12 Board; Reel Servo C-65
CD-17 Board; Capstan/Drum Servo C-78
SR-15 Board, Servo Ref. Signal Generator C-90
DT-05 Board; DT Control C-96
MB-14A Board; Mother Board C-105
Frame Wiring; Card Rack C-111

TAPE TRANSPORT

AP-12 Board; Audio/CTL REC/PB Preamplifier . C-115
BE-02 Board; Audio Bias/Erase Oscillator C-122
BE-03 Board; Audio Bias Amplifier C-128
BE-04 Board; Audio Bias Level Adj. C-128
Head Drum (02/04) C-133
DR-13 Board; Video/Sync PB Amp (Play Head)
DR-14 Board; Rotary Head Relaying
DR-15 Board; Rotary Head Relaying
DR-16 Board; Rotary Head Relaying
SL-07 Board; Slip Ring Relaying
SL-08 Board; Slip Ring Relaying
SL-09 Board; Slip Ring Relaying
Head Drum (00) ..... C-136(2/5)
DR-14 Board; Rotary Head Relaying
DR-15 Board; Rotary Head Relaying
DR-16 Board; Rotary Head Relaying
DR-20 Board; Rotary Head Relaying
RP-09 Board; Video R/P Amp (R/P Head) C-137
DD-03 Board; DT Driver C-141
DA-07 Board; Drum Motor Driver C-144
CA-09 Board; Capstan Motor Driver C-147
RA-05 Board; Reel Motor Driver C-151
TT-01 Board; TTP AUX C-156
RS-17 Board; Reel Size Sensor (for BVH-2180) . C-161
Frame Wiring; Tape Transport C-163
HM-05 Board; Head Hours Meter
TM-16 Board; Running/Op Hours Meter
TD-05 Board; Tape Detector
TH-03 Board; Threading Motor
MOTOR Board; IP Roller Motor Driver
TR-07 Board; Timer Roller Sensor
HD-06 Board; Video/Sync Erase Head
CEH-2 Board; Audio/CTL Erase Head
HD-07 Board; Audio/CTL R/P, Monitor Head
HD-08 Board; Audio/CTL R/P, Monitor Head
RS-18 Board; Reel Size Sensor (for BVH-2180)

LEVEL CONTROL PANEL

VR-05 Board; Level Control/Indicator C-169
VR-07 Board; Level Control/Indicator ..... C-172(2/5)
Frame Wiring; Level Control Panel C-173
ML-02 Board; Meter Lamp
MS-07 Board; Monitor Select
ML-03 Board; Meter Lamp
MS-08 Board; Monitor Select

POWER SUPPLY

AC-39 Board; Primary Rectifier C-178
FV-02 Board; Switching Regulator C-183
VV-01 Board; Switching Regulator C-187
FV-01 Board; Switching Regulator C-191
PS-14 Board; Series Regulator C-195
Frame Wiring; Power Supply C-207
CN-54 Board; Fan Motor Relaying

CONNECTOR PANEL

LA-02 Board; Audio Line IN/OUT Amplifier .. C-214
VM-01 Board; Video Buffer/Monitor Select ... C-220
Frame Wiring; Audio/Video CN Panel C-225
CN-37 Board; Video Connector Panel
Frame Wiring; Remote Connector Panel C-230
CN-49 Board; Remote Connector Panel

D. REPLACEABLE PARTS & OPTIONAL FIXTURE

Front Panel Assy D-2
Power Supply Assy D-5
Connector Panel Assy D-8
Card Rack Assy D-11
Level Control Panel Assy D-14
Reel Table Assy D-17
Tension Arm & Timer Roller Assy D-20
Head Drum Assy D-23
Movable Guide Assy D-26
Capstan & Mini Tension Arm Assy D-29
Stationary Head Assy D-31
PC Board & Panel Bracket on Front D-33
Tape Transport Rear Assy D-35

CARD RACK

AU-27 Board D-39
AE-03 Board D-41
EQ-02 Board D-48
EQ-11 Board D-51
DM-25 Board D-52
MD-14 Board D-55
LG-02(A) Board D-59
SY-79 Board D-60
SY-80 Board D-62
SV-43 Board D-63
RL-12 Board D-65
CD-17 Board D-68
SR-15 Board . . . . . D-71(5/5)
DT-05 Board (For 02/04 Model) D-75
MB-14A Board D-77

TAPE TRANSPORT

AP-12 Board D-78
BE-02 Board D-84
BE-03 Board D-87
BE-04 Board D-90
DR-13 Board (For 02/04 Model) D-90
DR-20 Board (For 00 Model) D-90
SL-07 Board (For 02/04 Model) D-91
SL-08 Board (For 02/04 Model) D-91
SL-09 Board (For 02/04 Model) D-91
RP-09 Board D-91
DD-03 Board (For 02/04 Model) D-93
DA-07 Board D-93
CA-09 Board D-95
RA-05 Board D-98
TT-01 Board D-101
RS-17 Board (For BVH-2180PS) D-103
RS-18 Board (For BVH-2180PS) D-103
TM-16 Board D-103
HM-05 Board D-104
MOTOR Board D-104
TD-05 Board D-104
TH-03 Board D-104
TR-07 Board D-105
HD-06 Board D-105
CEH-2 Board D-105
HD-07 Board (For 00/02 Model) D-105
HD-08 Board (For 04 Model) D-105

LEVEL CONTROL PANEL

VR-05 Board (For 00/02 Model) D-105
VR-07 Board (For 04 Model) D-106
ML-02 Board (For 00/02 Model) D-107
ML-03 Board (For 04 Model) D-108
MS-07 Board (For 00/02 Model) D-108
MS-08 Board (For 04 Model) D-108

POWER SUPPLY

AC-39 Board D-108
FV-02 Board D-110
VV-01 Board D-112
FV-01 Board D-113
PS-14 Board D-116
CN-54 Board D-119

CONNECTOR PANEL

LA-02 Board D-119
VM-01 Board D-125
CN-37 Board D-127
CN-49 Board D-128

Frame D-128
Accessories Supplied D-132
Optional Fixture D-133

E. CHANGED PARTS

AU-27, AP, LA-02, VR, MS
BLOCK DIAGRAM
AUDIO-1 & 2 SIGNAL SYSTEM
AUDIO-1

AUDIO-1 & 2 SIGNAL SYSTEM

- AU-27 BOARD
- AP BOARD
- LA-02 BOARD
- VR BOARD
- MS BOARD

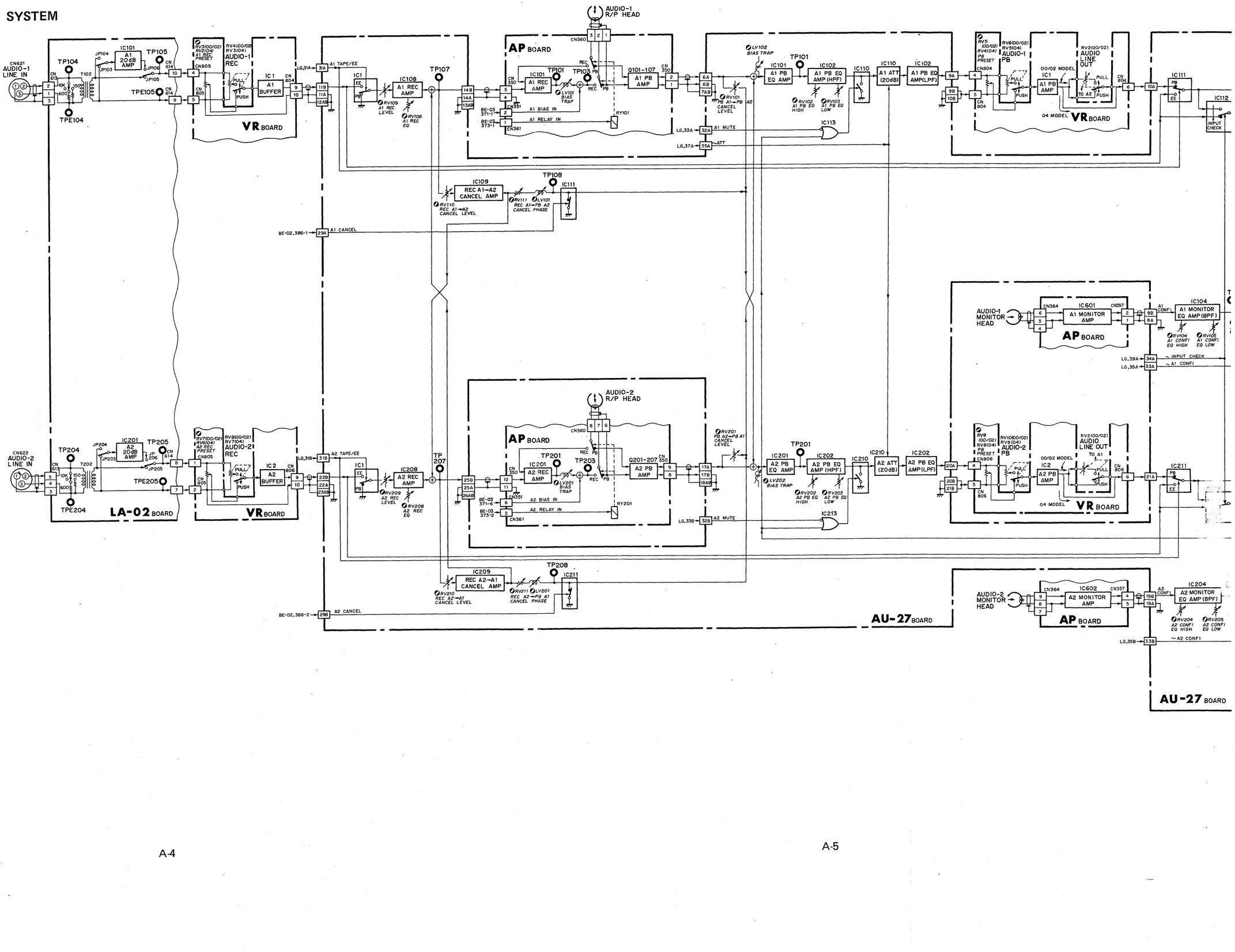

AUDIO-1 & 2 SIGNAL SYSTEM
AU-27, AP, LA-02, VR, MS
BLOCK DIAGRAM

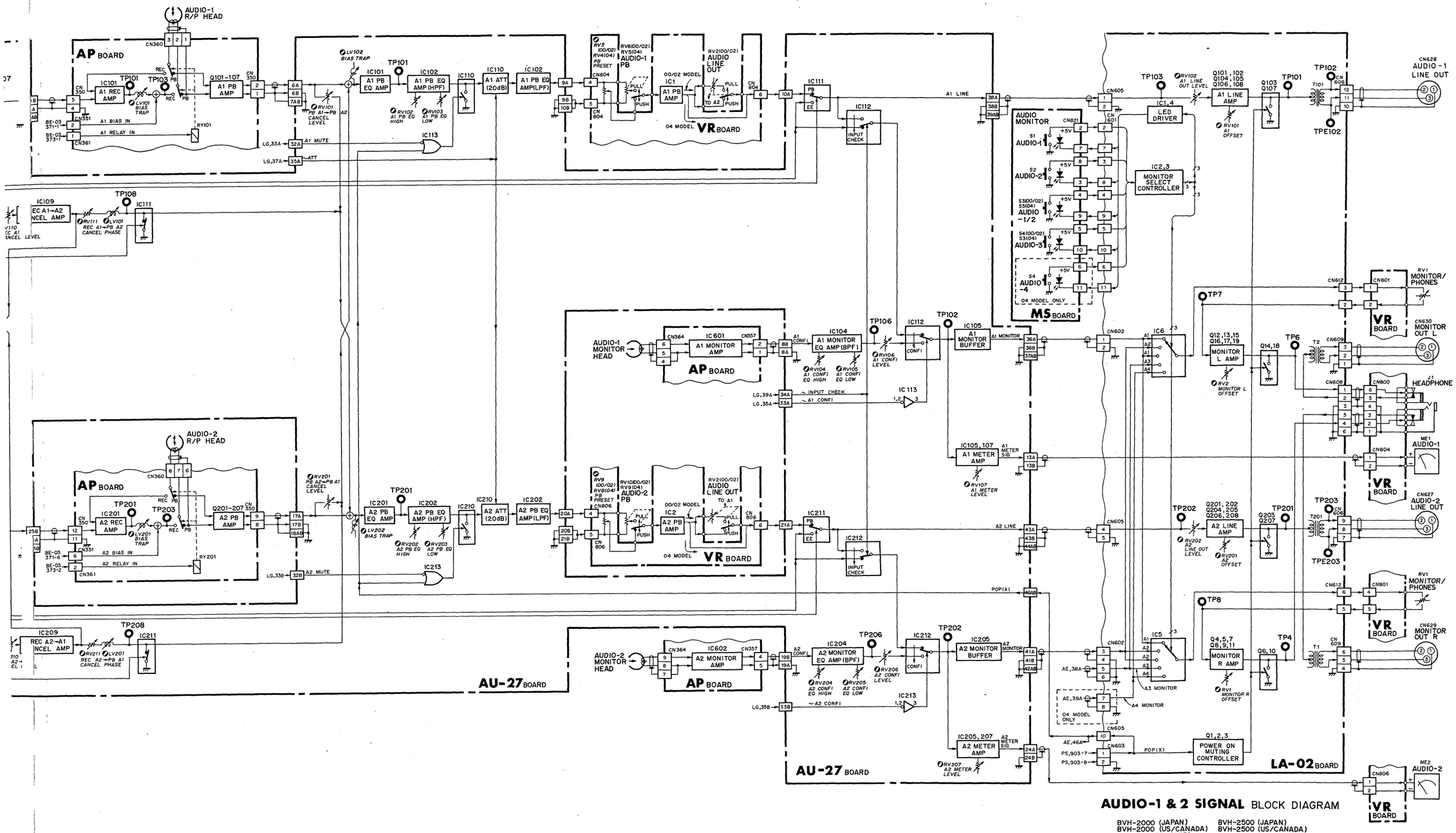

AUDIO-1 & 2 SIGNAL BLOCK DIAGRAM

BVH-2000 (JAPAN)
BVH-2000 (US/CANADA)
BVH-2000PS (AEP)
BVH-2000PM (BRZ)
BVH-2180 (JAPAN)
BVH-2180 (US/CANADA)
BVH-2180PS (AEP)
BVH-2180PM (BRZ)

BVH-2500 (JAPAN)
BVH-2500 (US/CANADA)
BVH-2500P(AEP)

AUDIO-3 SIGNAL SYSTEM (FOR 00/10/02/12)
AE-03, AP, LA-02, VR
BLOCK DIAGRAM

AUDIO-3 SIGNAL SYSTEM

- AE-03 BOARD
- AP BOARD
- LA-02 BOARD
- VR BOARD

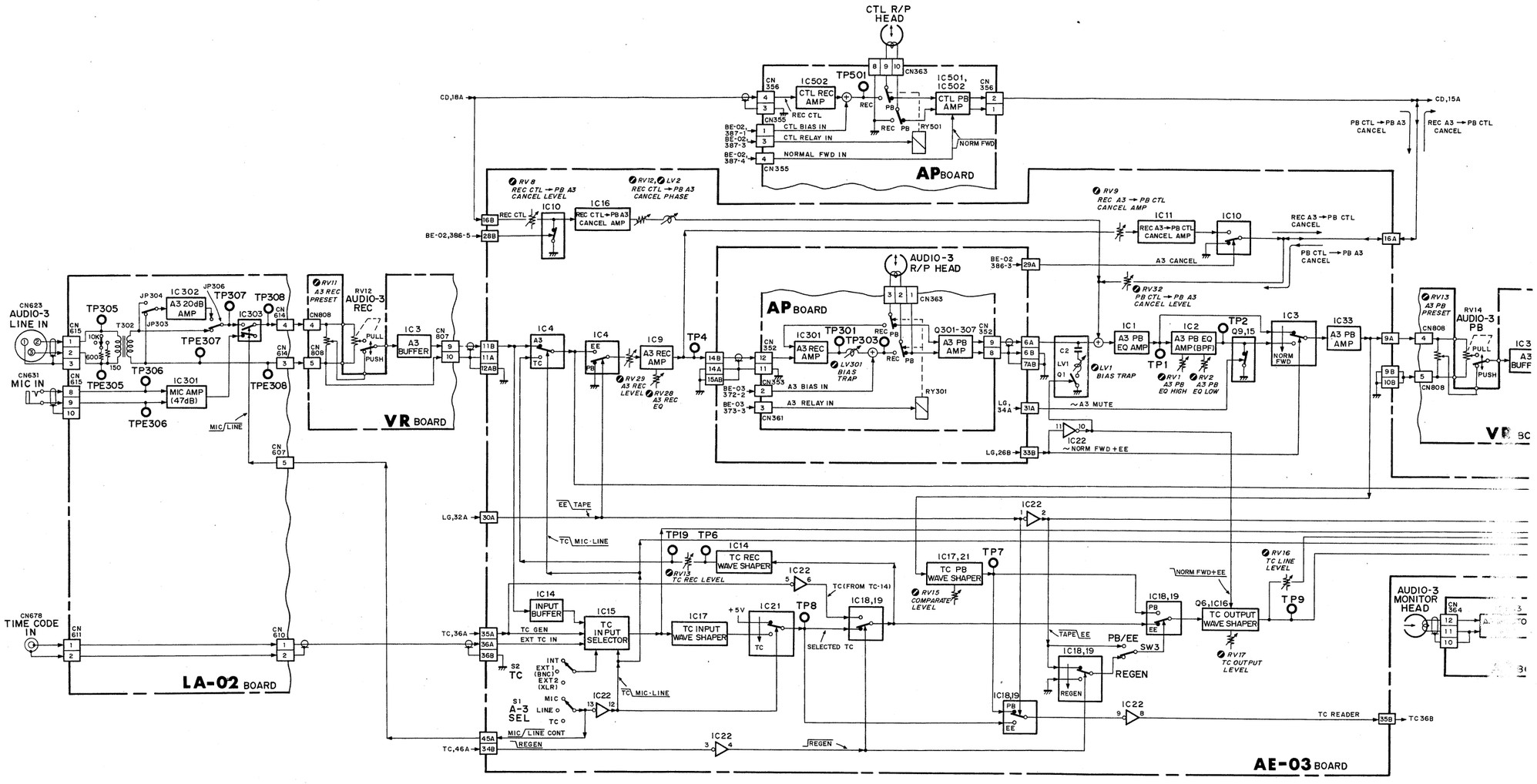

AE-03, AP, LA-02, VR BLOCK DIAGRAM AUDIO-3 SIGNAL SYSTEM (FOR 00/10/02/12)

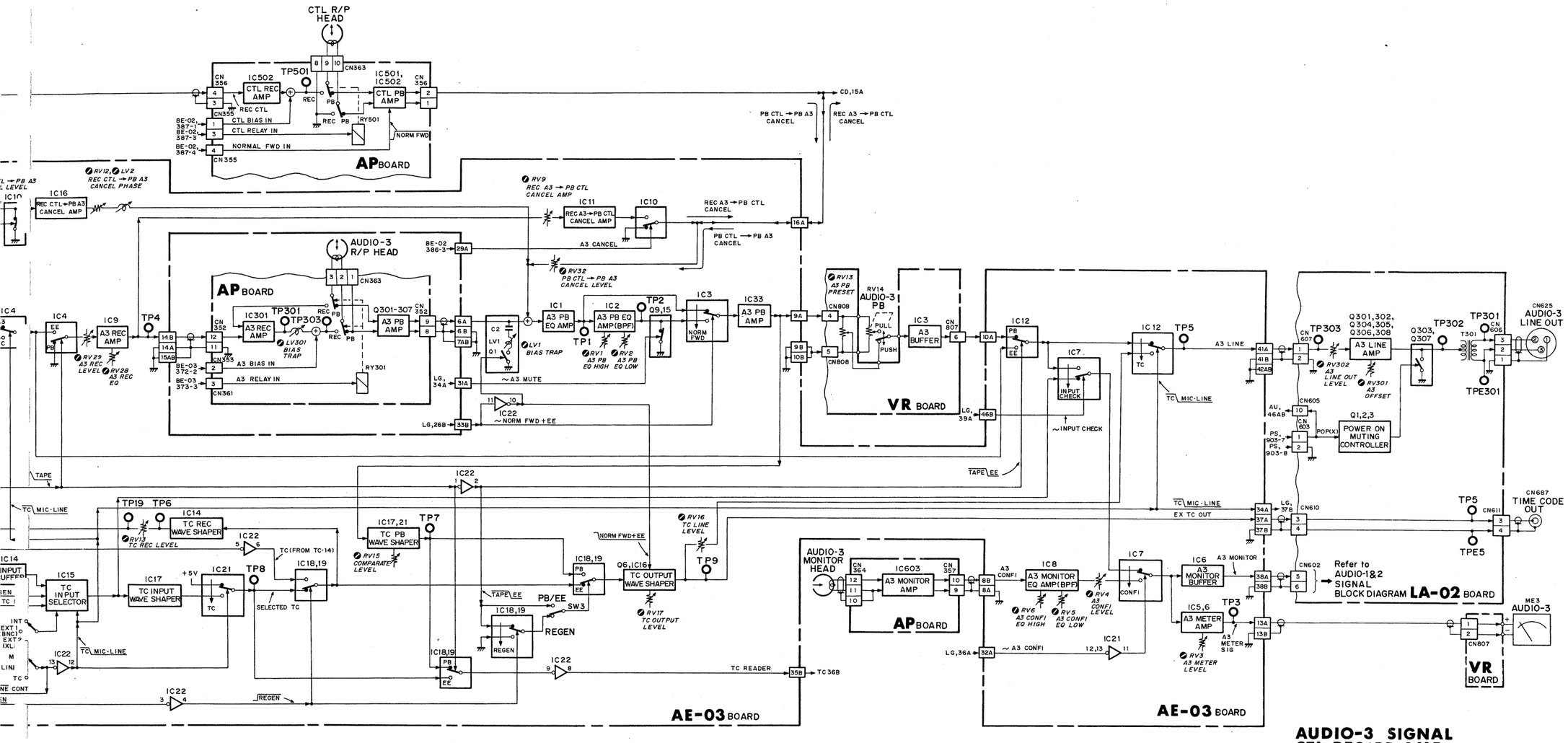

AUDIO-3 SIGNAL CTL REC/PB AMP TC SELECT

BLOCK DIAGRAM (00/10/02/12 MODEL)

BVH-2000(J) ;# 10501-	BVH-2500(J) ;# 10001-
BVH-2000(U/C) ;# 10501-	BVH-2500(U/C) ;# 10001-
BVH-2000PS ;# 10301-	BVH-2500P ;# 10001-
BVH-2000PM ;# 10001-	
BVH-2180(J) ;# 10001-	
BVH-2180(U/C) ;# 10001-	
BVH-2180PS ;# 10001-	
BVH-2180PM ;# 10001-	

AUDIO-3 & 4 SIGNAL SYSTEM (FOR 04/14)
AE-03, AP-12, LA-02, VR
BLOCK DIAGRAM

AUDIO-3 & 4 SIGNAL SYSTEM

AE-03 BOARD
AP-12 BOARD
LA-02 BOARD
VR BOARD

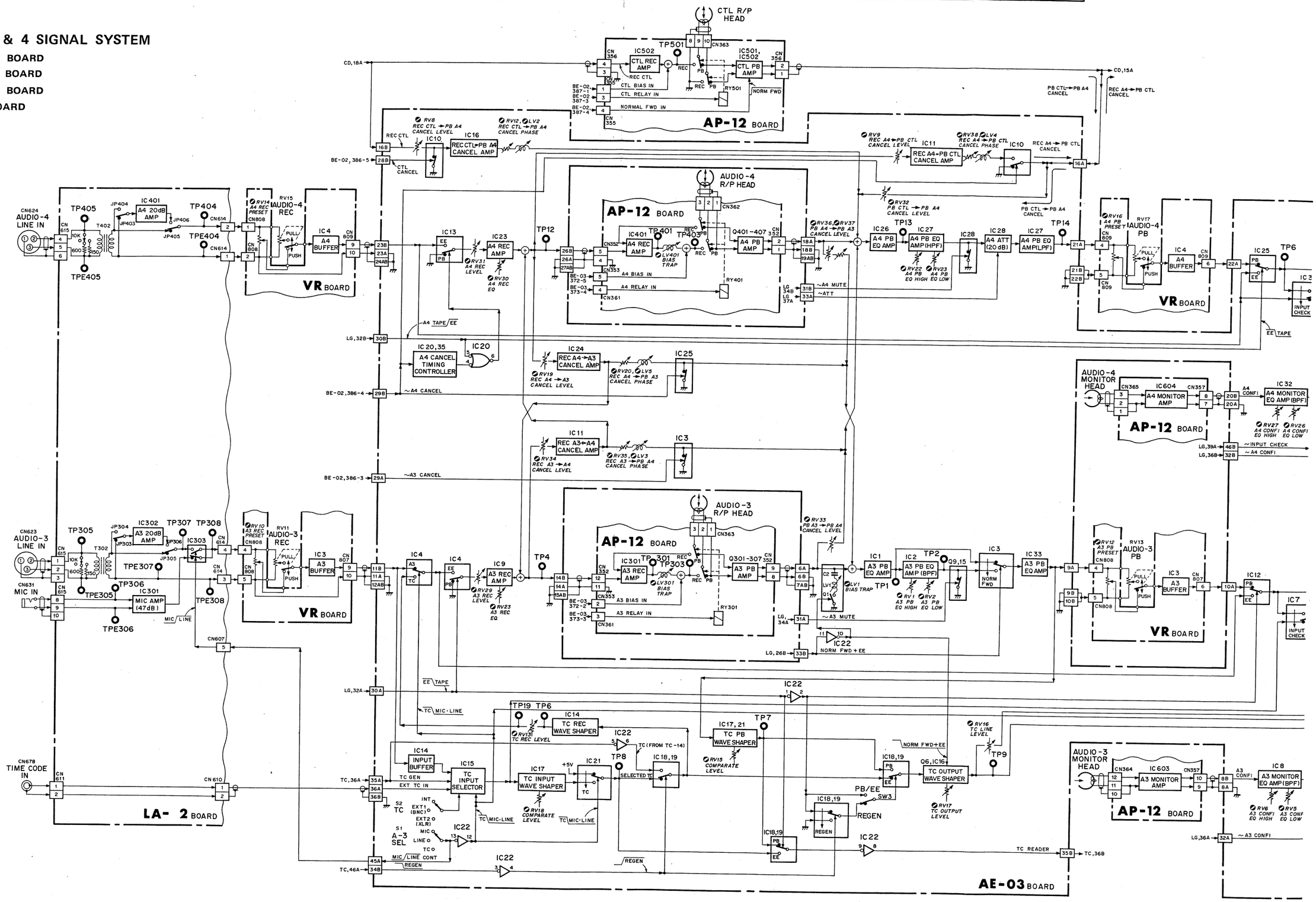

A-9(5/7)

A-9(6/7)

AE-03, AP-12, LA-02, VR
BLOCK DIAGRAM
AUDIO-3 & 4 SIGNAL SYSTEM (FOR 04/14)

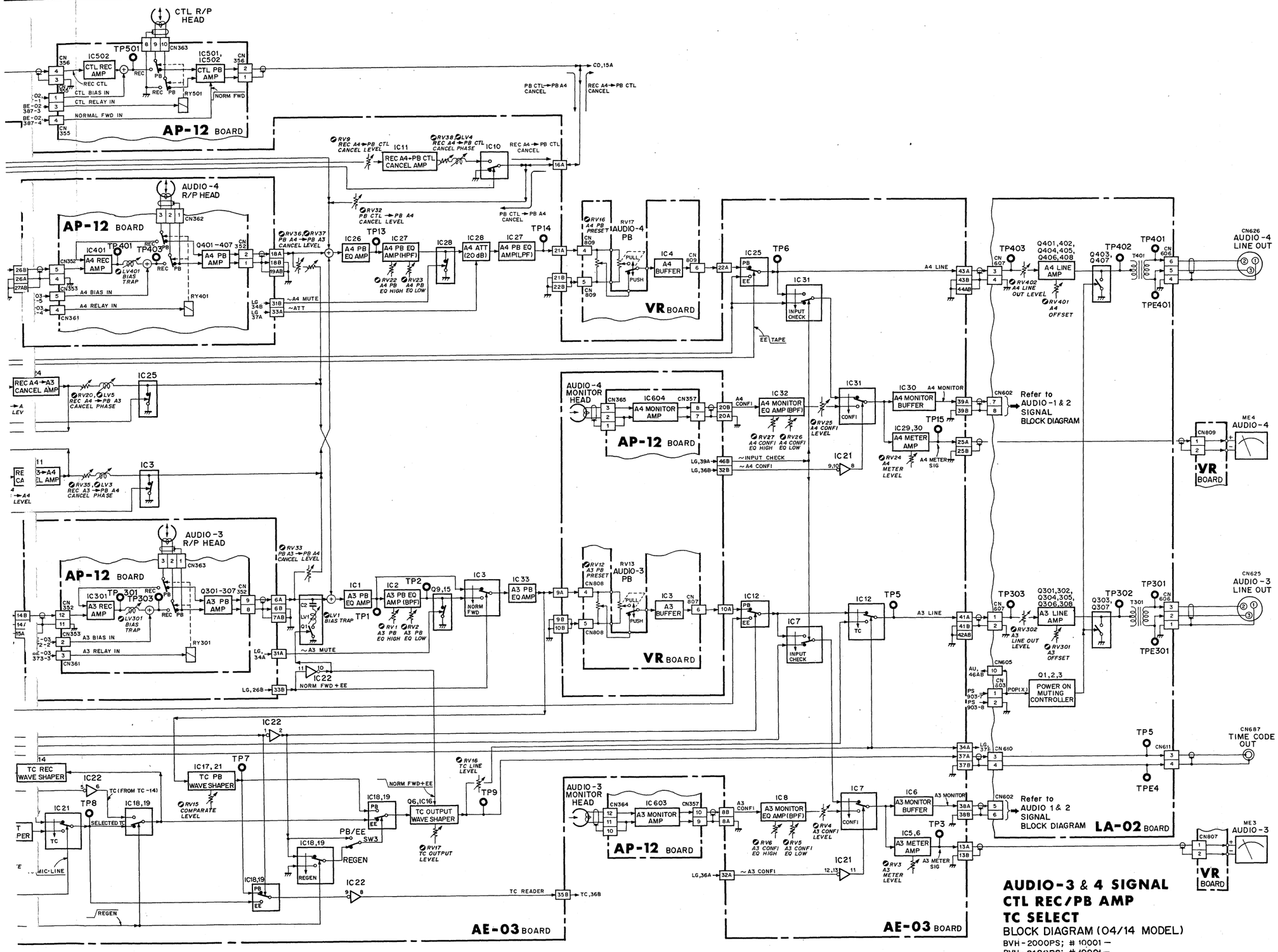

AUDIO-3 & 4 SIGNAL CTL REC/PB AMP TC SELECT

BLOCK DIAGRAM (04/14 MODEL)

BVH-2000PS; # 10001 —
BVH-2180PS; # 10001 —

BIAS/ERASE

BE-02 BOARD
BE-03 BOARD
BE-04 BOARD

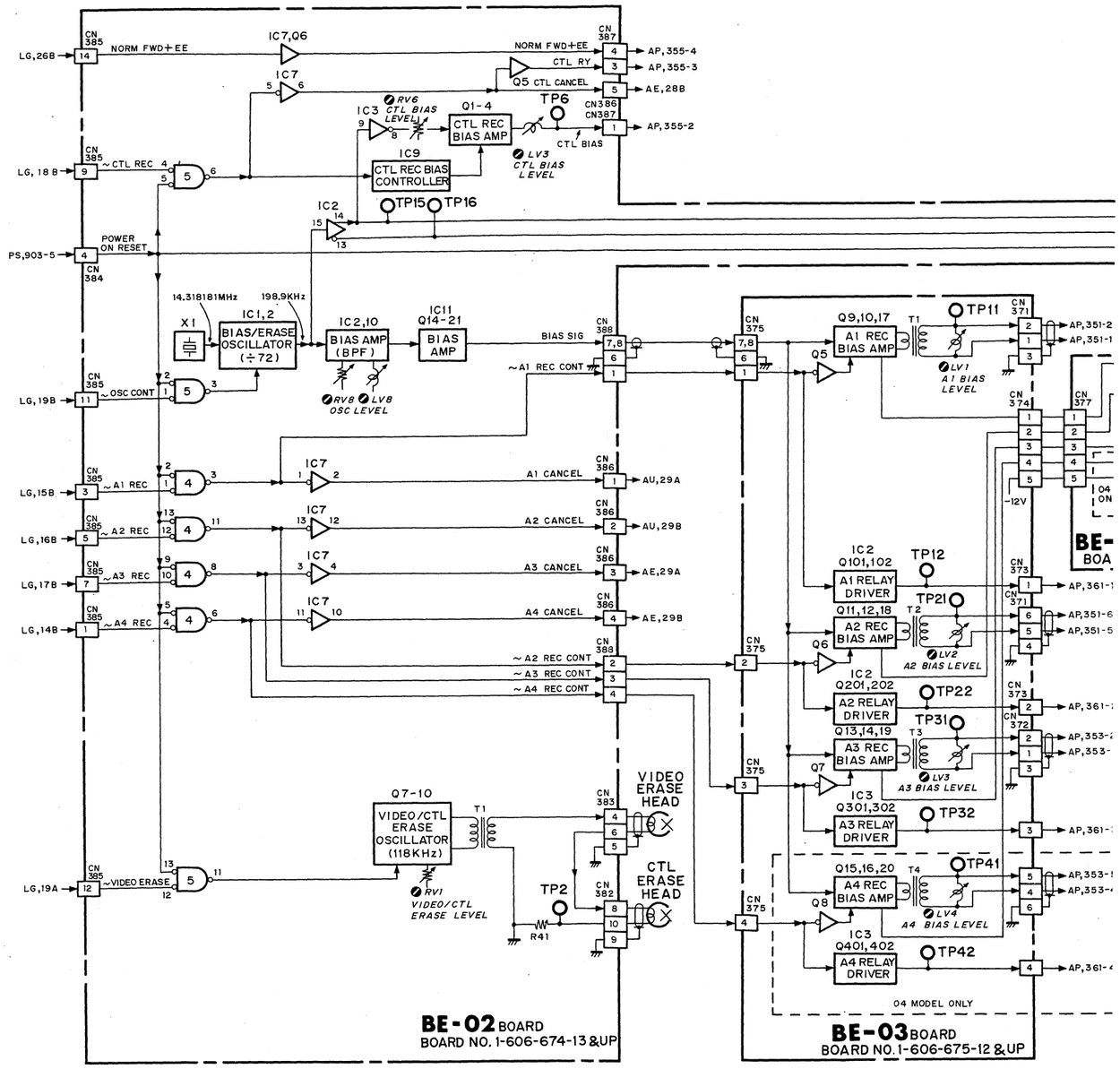

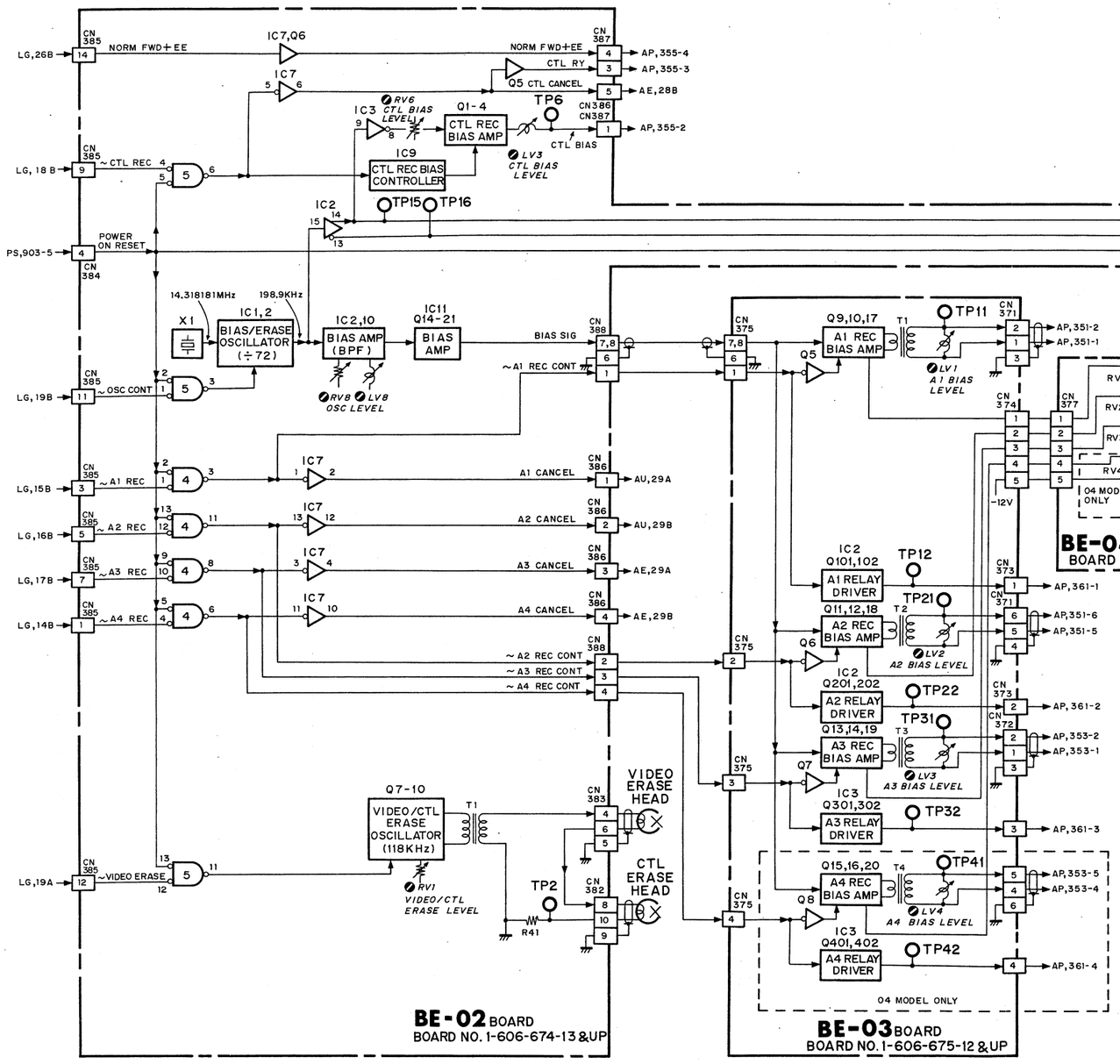

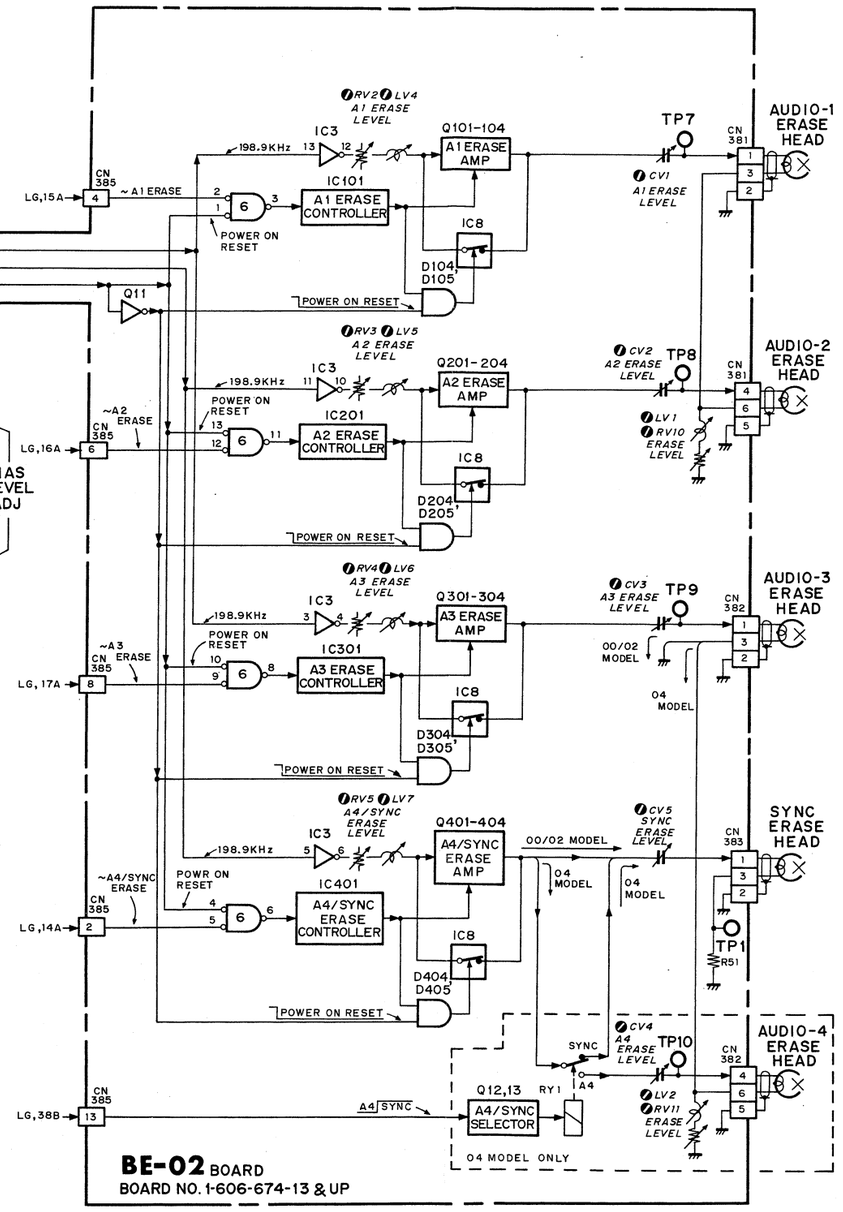

AUDIO BIAS/ERASE AMP
VIDEO ERASE AMP

BLOCK DIAGRAM

BVH-2000(J) ;# 10501-
BVH-2000(U/C) ;# 10501-
BVH-2000PS ;# 10301-
BVH-2000PM ;# 10001-
BVH-2180(J) ;# 10001-
BVH-2180(U/C) ;# 10001-
BVH-2180PS ;# 10001-
BVH-2180PM ;# 10001-

BVH-2500(J) ;# 10001 –
BVH-2500(U/C) ;# 10001 –
BVH-2500P ;# 10001-

VIDEO SYSTEM OVERALL (FOR 02/12/04/14) BLOCK DIAGRAM

VIDEO SIGNAL SYSTEM OVERALL BLOCK DIAGRAM

FOR 02/12/04/14 MODELS

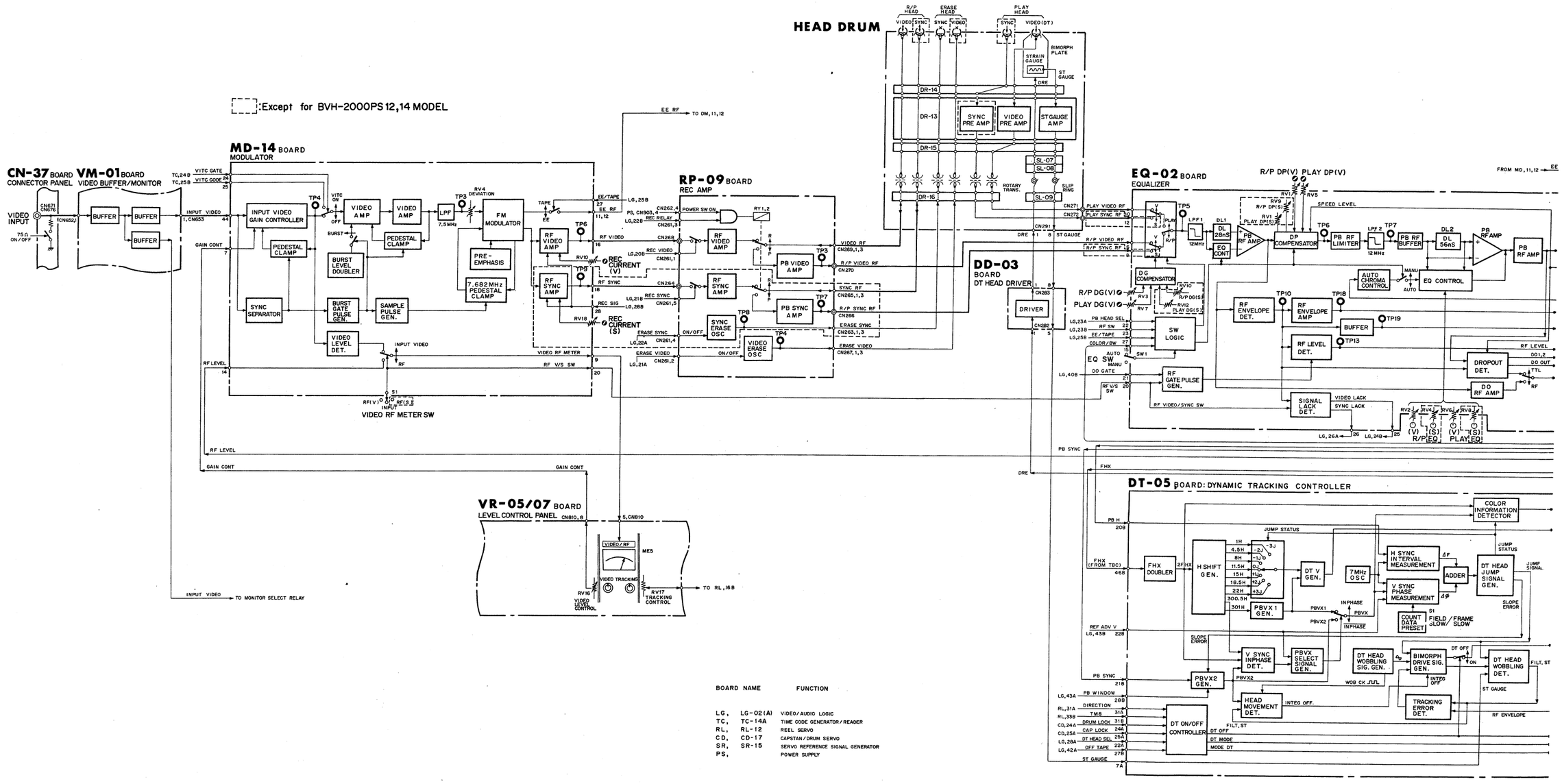

BOARD NAME		FUNCTION
LG,	LG-02(A)	VIDEO/AUDIO LOGIC
TC,	TC-14A	TIME CODE GENERATOR/READER
RL,	RL-12	REEL SERVO
CD,	CD-17	CAPSTAN/DRUM SERVO
SR,	SR-15	SERVO REFERENCE SIGNAL GENERATOR
PS,		POWER SUPPLY

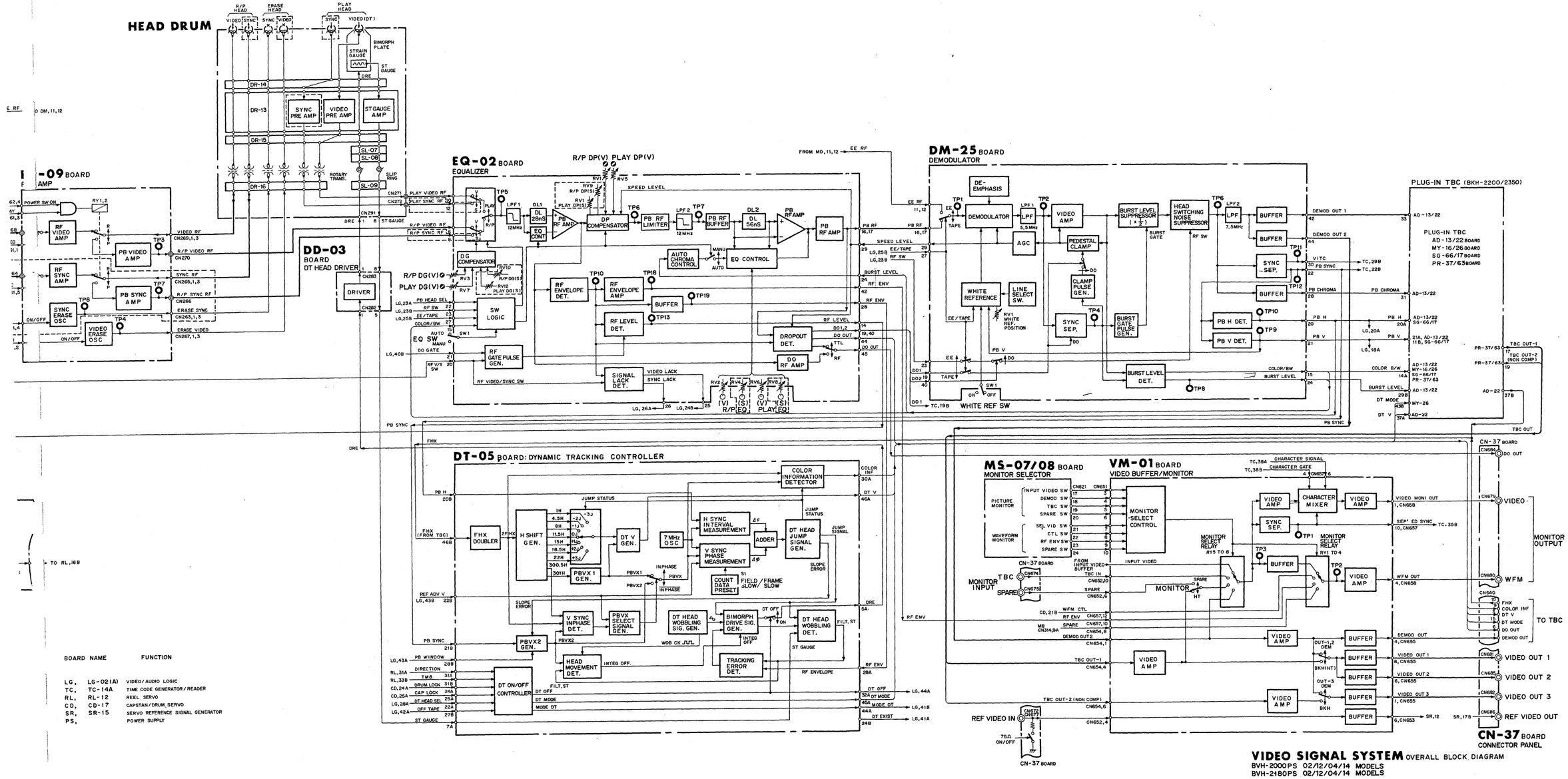

BOARD NAME		FUNCTION
LG,	LG-02(A)	VIDEO/AUDIO LOGIC
TC,	TC-14A	TIME CODE GENERATOR/READER
RL,	RL-12	REEL SERVO
CD,	CD-17	CAPSTAN/DRUM, SERVO
SR,	SR-15	SERVO REFERENCE SIGNAL GENERATOR
PS,		POWER SUPPLY

VIDEO SIGNAL SYSTEM OVERALL BLOCK DIAGRAM
BVH-2000PS 02/12/04/14 MODELS
BVH-2180PS 02/12/04/14 MODELS

VIDEO SIGNAL SYSTEM OVERALL BLOCK DIAGRAM; FOR 00/10 MODEL

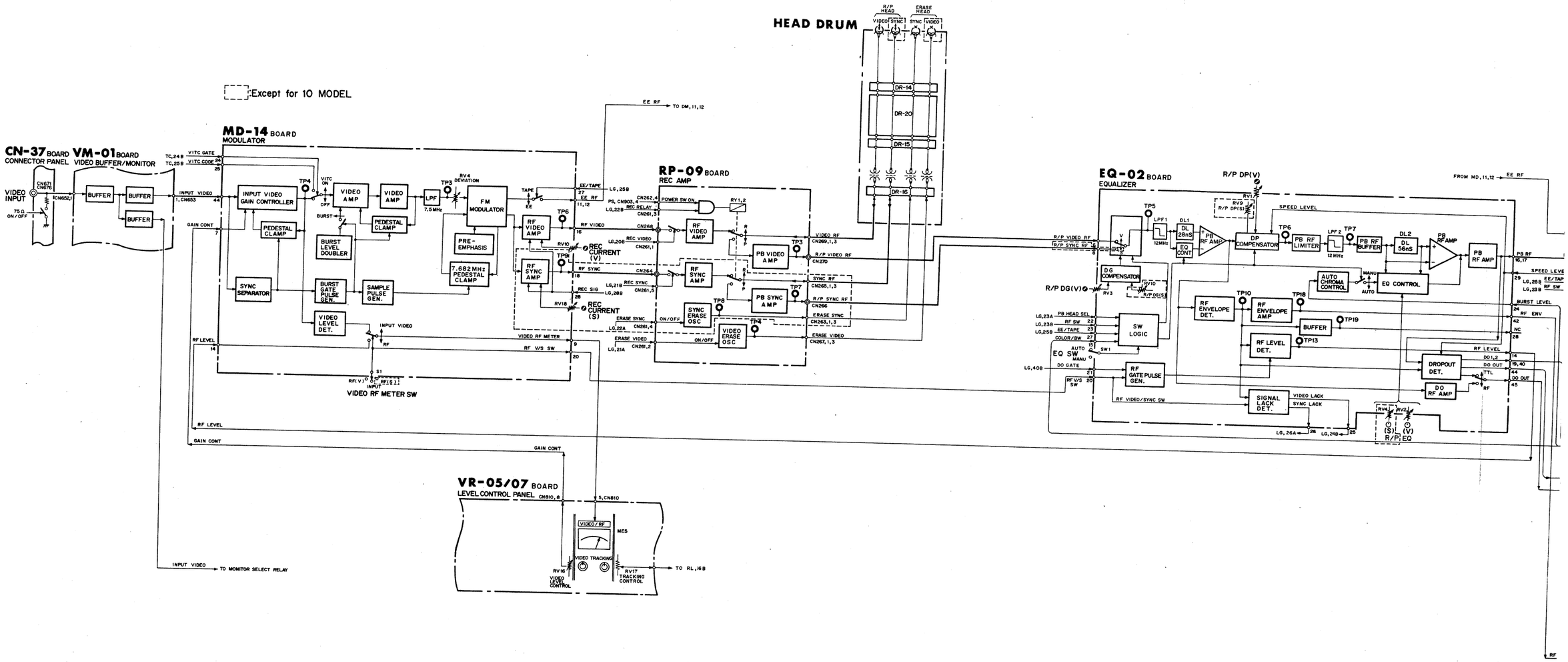

BOARD NAME		FUNCTION
LG,	LG-02(A)	VIDEO/AUDIO LOGIC
TC,	TC-14A	TIME CODE GENERATOR/READER
RL,	RL-12	REEL SERVO
CD,	CD-17	CAPSTAN/DRUM SERVO
SR,	SR-15	SERVO REFERENCE SIGNAL GENERATOR
PS,		POWER SUPPLY

VIDEO SIGNAL SYSTEM OVERALL (FOR 00/10) BLOCK DIAGRAM

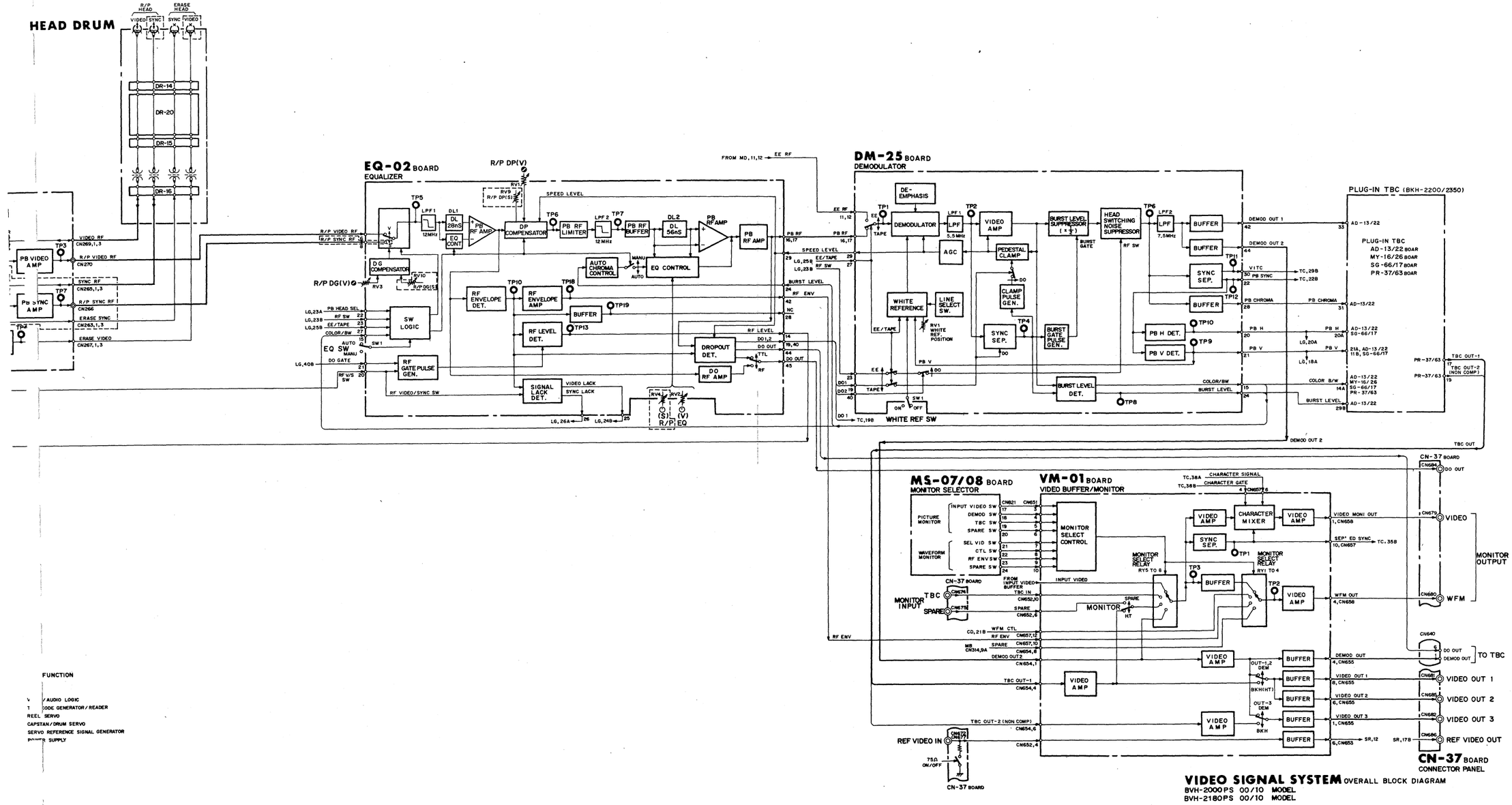

VIDEO SIGNAL SYSTEM OVERALL BLOCK DIAGRAM
BVH-2000PS 00/10 MODEL
BVH-2180PS 00/10 MODEL

FUNCTION

/ AUDIO LOGIC
CODE GENERATOR / READER
REEL SERVO
CAPSTAN / DRUM SERVO
SERVO REFERENCE SIGNAL GENERATOR
POWER SUPPLY

MD-14 BOARD

Video Modulator

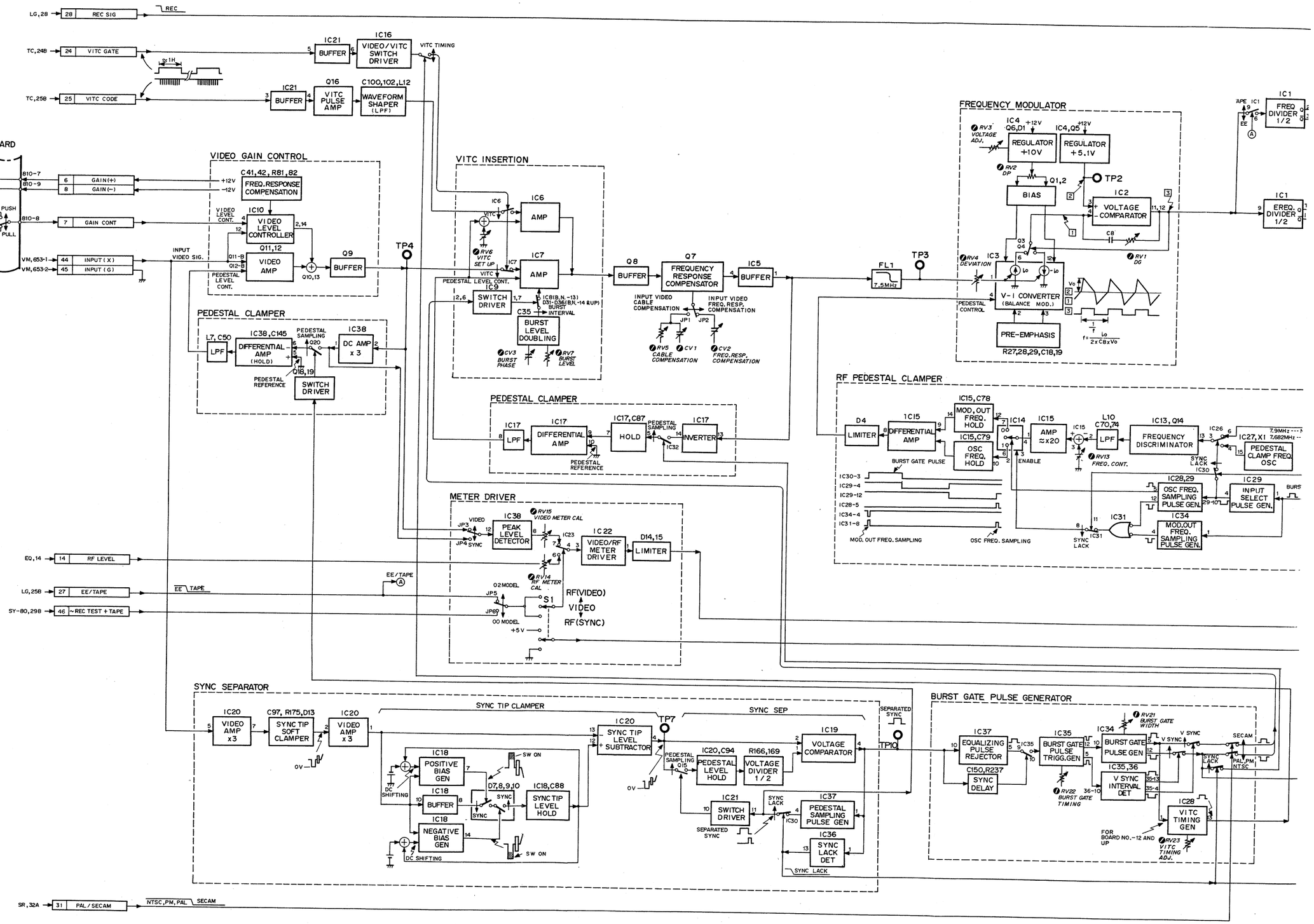

FREQUENCY MODULATOR

RF PEDESTAL CLAMPER

BURST GATE PULSE GENERATOR

VIDEO CHANNEL RF AMP

SYNC CHANNEL RF AMP

□□□ : Except for 10,12,14 MODEL

VR BOARD

MD-14 BOARD BLOCK DIAGRAM

BOARD NO.1-606-11,12,13 AND UP
BVH-2000(J/U/C)
BVH-2000PS(AEP)
BVH-2000PM(BRZ)
BVH-2180(J/U/C)
BVH-2180PS(AEP)
BVH-2180PM(BRZ)

EQ-02 BOARD

Video/Sync PB Equalizer

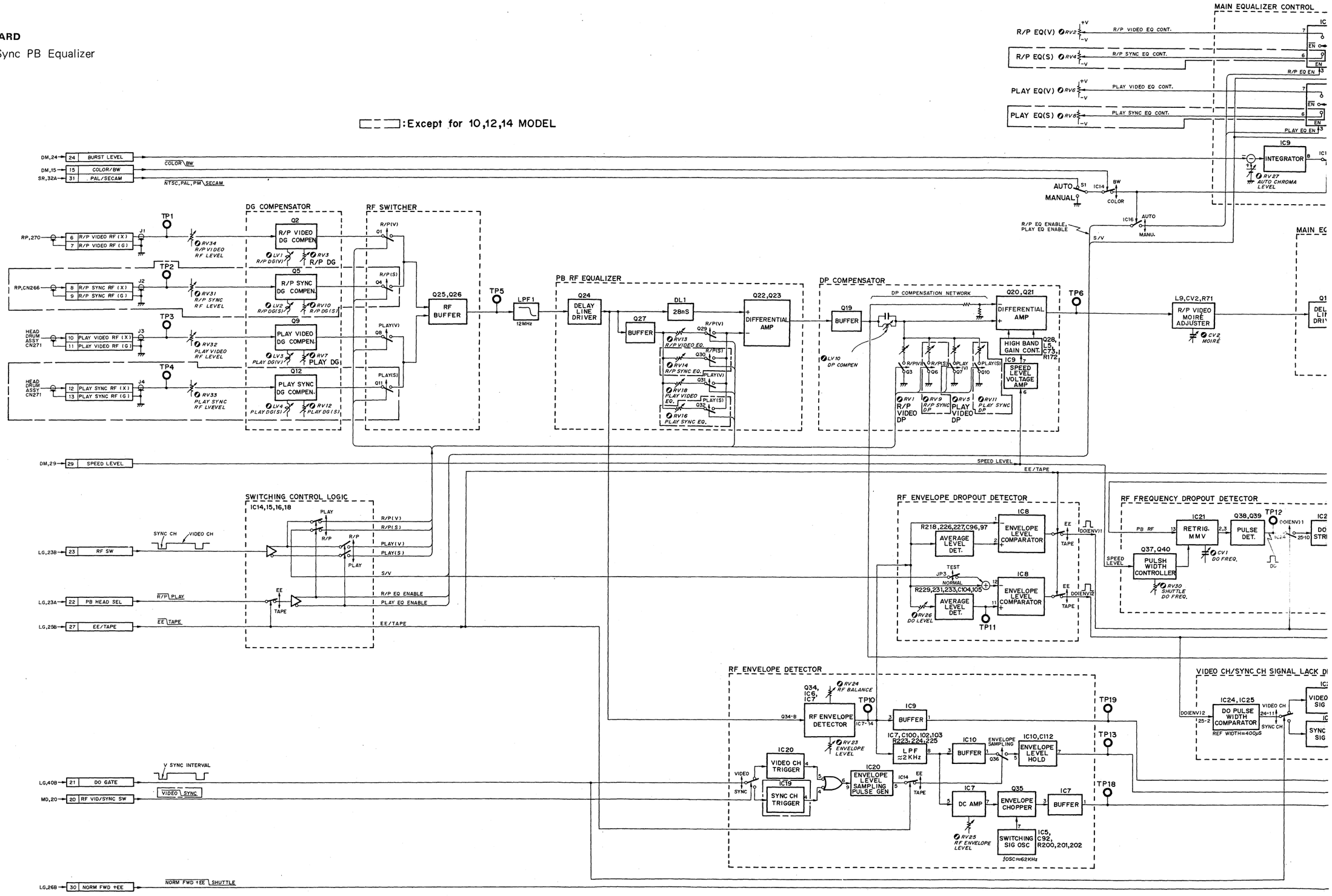

MAIN EQUALIZER CONTROL

R/P EQ(V) RV2 +V −V — R/P VIDEO EQ CONT. — IC12
R/P EQ(S) RV4 +V −V — R/P SYNC EQ CONT. — IC12
R/P EQ EN — IC12
PLAY EQ(V) RV6 +V −V — PLAY VIDEO EQ CONT. — IC11
PLAY EQ(S) RV8 +V −V — PLAY SYNC EQ CONT. — IC11
PLAY EQ EN — IC11
IC9 DC AMP — IC9 CLIPPER — D2,D3
RV28 EQ CONT.
IC9 INTEGRATOR — IC13 AUTO / MANU.
RV27 AUTO CHROMA LEVEL
AUTO / MANUAL S1 — IC14 BW COLOR
R/P EQ ENABLE, PLAY EQ ENABLE — IC16 AUTO / MANU. — S/V

MAIN EQUALIZER

IC3 MULTIPLIER — K CONT.
Q15 DELAY LINE DRIVER — DL2 56nS — Q17 BUFFER — Q16 BUFFER — Q18,Q41 DIFFERENTIAL AMP
RV21 RF EQ CONT
TP8 — RV35 MOIRÉ — IC4 PB RF LIMITER — EE / TAPE

PB RF (X) 16 → DM,16
PB RF (Y) 17 → DM,17
GND 18 → DM,18

B RF EQUALIZER

Q24 DELAY LINE DRIVER — DL1 28nS — Q22,Q23 DIFFERENTIAL AMP
Q27 BUFFER
R/P(V) Q29 — RV13 R/P VIDEO EQ.
R/P(S) Q30 — RV14 R/P SYNC EQ.
PLAY(V) Q31 — RV18 PLAY VIDEO EQ.
PLAY(S) Q32 — RV16 PLAY SYNC EQ.

DP COMPENSATOR

Q19 BUFFER — DP COMPENSATION NETWORK — Q20,Q21 DIFFERENTIAL AMP
LV10 DP COMPEN
R/P(V) Q3 — RV1 R/P VIDEO DP
R/P(S) Q6 — RV9 R/P SYNC DP
PLAY(V) Q7 — RV5 PLAY VIDEO DP
PLAY(S) Q10 — RV11 PLAY SYNC DP
HIGH BAND GAIN CONT. — Q28, L5, C73, R172
IC9 SPEED LEVEL VOLTAGE AMP

TP6 — L9,CV2,R71 R/P VIDEO MOIRÉ ADJUSTER — CV2 MOIRÉ

SPEED LEVEL
EE/TAPE

RF ENVELOPE DROPOUT DETECTOR

R218,226,227,C96,97 — AVERAGE LEVEL DET. — IC8 ENVELOPE LEVEL COMPARATOR — EE / TAPE — DO(ENV)1
TEST JP3 NORMAL
R229,231,233,C104,105 — AVERAGE LEVEL DET. — IC8 ENVELOPE LEVEL COMPARATOR — EE / TAPE — DO(ENV)2
RV26 DO LEVEL
TP11

RF FREQUENCY DROPOUT DETECTOR

PB RF — IC21 RETRIG. MMV — Q38,Q39 PULSE DET. — TP12 DO(ENV)1 — IC24,IC25 DO PULSE STRETCHER — DO(FR)
SPEED LEVEL — Q37,Q40 PULSH WIDTH CONTROLLER
CV1 DO FREQ.
RV30 SHUTTLE DO FREQ.
DO

SHUTTLE IC22 — NORM.FWD +EE
JP2 TTL / JP1 RF

DO(FR)+DO(ENV)2 — TP15 — DROPOUT (TBC) 44 → TO TBC CN640-6
DO(FR)+DO(ENV)1 — TP14 — DROPOUT-1 19 → DM,19
DO(FR)+DO(ENV)2 — TP17 — DROPOUT-2 40 → DM,40 AD,27B
DO(FR)+DO(ENV)2 — TP16 — DO SIG OUT 45 → CN684 DO SIG (CN PANEL)

TTL / RF — DO

Q33 DO RF AMP
RV22 DO RF LEVEL

RF ENVELOPE DETECTOR

Q34, IC6, IC7 RF ENVELOPE DETECTOR — RV24 RF BALANCE — RV23 ENVELOPE LEVEL — TP10 — IC9 BUFFER — TP19
IC7, C100,102,103 R223,224,225 LPF ≈2 KHz — IC10 BUFFER — ENVELOPE SAMPLING Q36 — IC10,C112 ENVELOPE LEVEL HOLD — TP13
IC20 VIDEO CH TRIGGER
IC19 SYNC CH TRIGGER
VIDEO / SYNC
IC20 ENVELOPE LEVEL SAMPLING PULSE GEN — IC14 EE / TAPE
IC7 DC AMP — RV25 RF ENVELOPE LEVEL — Q35 ENVELOPE CHOPPER — IC7 BUFFER — TP18
IC5, C92, R200,201,202 SWITCHING SIG OSC — fOSC≈62KHz

VIDEO CH/SYNC CH SIGNAL LACK DETECTOR

DO(ENV)2 — IC24,IC25 DO PULSE WIDTH COMPARATOR — REF WIDTH=400μS — VIDEO CH / SYNC CH
IC26 VIDEO LACK SIG GEN — VIDEO LACK 25 → LG,24B
IC26 SYNC LACK SIG GEN — SYNC LACK 26 → LG,26A

RF ENVELOPE 28 → DT,28A
RF LEVEL 14 → MD,14
RF ENVELOPE (X) 42 → VM,657-10
RF ENVELOPE (G) 43

EQ-02 BOARD BLOCK DIAGRAM

BOARD NO. 1-606-659-12,13,14 AND UP

BVH-2000(J/U/C) BVH-2180(J/U/C) BVH-2500(J/U/C)
BVH-2000PS(AEP) BVH-2180PS(AEP) BVH-2500P
BVH-2000PM(BRZ) BVH-2180PM(BRZ)

DM-25 BOARD

Video Demodulator

EQ,16 — 16 PB RF(X)
EQ,17 — 17 PB RF(Y)
EQ,18 — 18 GND
MD,11 — 11 EE RF(X)
MD,12 — 12 EE RF(Y)
MD,13 — 13 GND

IC6 ECL TO TTL

IC5 TAPE / EE

TP1

FM DEMODULATOR

IC4,Q3,Q4,Q5,Q6,Q15 FREQUENCY DISCRIMINATOR
RV4 SECOND ORDER MOIRE
GAIN CONT. (PULSE WIDTH CONT.)
C60,R66 DE-EMPHASIS
RV7 LOW BAND FREQ. RESP.
IC1 BUFFER AMP
LPF1 NTSC, PM 4.5MHz PAL, SECAM 5.5MHz

TP2

IC3 AGC
TP5
SPEED LEVEL ≒+8V / 0V / ≒−8V — REV / FWD
RV10 AGC LEVEL

IC2 X1 WHITE REFERENCE SIG. OSC
NTSC, PM 10MHz PAL, SECAM 8.9MHz
OSC ON
WHITE REFERENCE ON

INSERTION LINE SELECTION BY SW1 AND SW2A

SW1	ON CHANNEL OF SW2A	INSERTION LINE NTSC	PAL/SECAM	PAL-M
ON	1	10,11	6, 7,319,320	7, 8,270,271
	2	12,13	8, 9,321,322	9,10,272,273
	3	14,15	10,11,323,324	11,12,274,275
	4	16,17	12,13,325,326	13,14,276,277
	5	18,19	14,15,327,328	15,16,278,279
	6	20,21	16,17,329,330	17,18,280,281
	7	22,23	18,19,331,332	19,20,282,283
	8	24,25	20,21,333,334	21,22,284,285
OFF	Don't care.	Not Inserted		

WHITE REFERENCE INSERTION LINE SELECTOR

* REFER TO THE ABOVE TABLE FOR THE SW2A SETTING.

WHITE REFERENCE ON OFF SW1 +5V

IC2E WHITE REFERENCE "ON" SIG. GEN. LATCH

LINE SELECTOR
SW2A
IC2B
INSERTION
INH
2H UNIT ON OFF
H SYNC ENABLE
9, 10, 11
3-BIT BINARY DATA

TAPE EE

PBV

IC4B INSERTION START SIG GEN.
RV1 WHITE REF. INSERTION START LINE SET.

16H ENABLE

IC2D COUNT ENABLE SIG GEN.

IC2C SWITCH CONTROL SIG GEN. (16 COUNTER)
COUNT END

IC3A INSERTION ENABLE SIG. TRIGGER
IC3A INSERTION ENABLE SIG. GEN.
RV12 WHITE REFERENCE WIDTH
H SYNC ENABLE ON

IC6 ECL TO TTL

IC5 WHITE REFERENCE ON

IC12 VIDEO AMP
PEDESTAL CONTROL
RV16 HIGH BAND FREQ. RESP.

IC13 VIDEO AMP
RV15 VIDEO GAIN
RV14 FREQ. RESP.

PEDESTAL CLAMPER

L10,C110 LPF
IC11 INTEGRATOR
PEDESTAL SAMPLING
IC11 SUBTRACTOR
RV18 PEDESTAL CLAMP LEVEL
IC5D PEDESTAL SAMPLING PULSE GEN.
D01
SYNC LACK
Q9,Q10 SWITCH DRIVER
IC3D SYNC LACK DET

SYNC SEPARATOR

IC3F VIDEO AMP x3
IC3F SYNC CH/DO INTERVAL DC SHIFTER
D01 RF SW
IC3F INVERTING AMP x3

SYNC TIP CLAMPER
IC2F SYNC TIP SUBTRACTOR
TP3
SYNC SEP
IC1E VOLTAGE COMPARATOR
TP4 SEPARATED SYNC
0V

IC2F POSITIVE BIAS GEN.
SW ON
DC SHIFTING
IC2F BUFFER
D2,3,4,5 SYNC
IC2F,C24 SYNC TIP LEVEL HOLD
IC3F NEGATIVE BIAS GEN.
SW ON

PBH/PBV SYNC SEPARATOR

IC4D,4E EQUALIZING PULSE DET.
IC4D EQUALIZING PULSE WINDOW GEN
WINDOW IC5B
IC5B INHIBIT SIGNAL GEN.
C40,R54 DELAY
IC4B 3rd EQ PULSE WINDOW GEN.
WINDOW IC4A 3rd EQ PULSE GATE SIG. GEN.
GATE ON IC4A PBV GEN.
3rd EQ PULSE
IC4C PBH GEN.

H SYNC DET
IC4D HALF H REJECTOR
V SYNC INTERVAL
H SYNC
IC3B
PBH
BACK PORCH OR DO
IC1A
IC5A,5B BACK PORCH/DO GATE PULSE GEN.
D02

LG,26B — 26 NORM FWD+EE
SR,32A — 31 PAL/SECAM
TO BURST LEVEL/NOISE SUPPRESSOR
LG,25B — 27 EE/TAPE
EQ,19 TC,19B — 19 DROPOUT-1
LG,23 — 23 RF SW
EQ,40 — 40 DROPOUT-2

CONTROL LOGIC
EE TAPE
EE TAPE

DM-25 BLOCK DIAGRAM

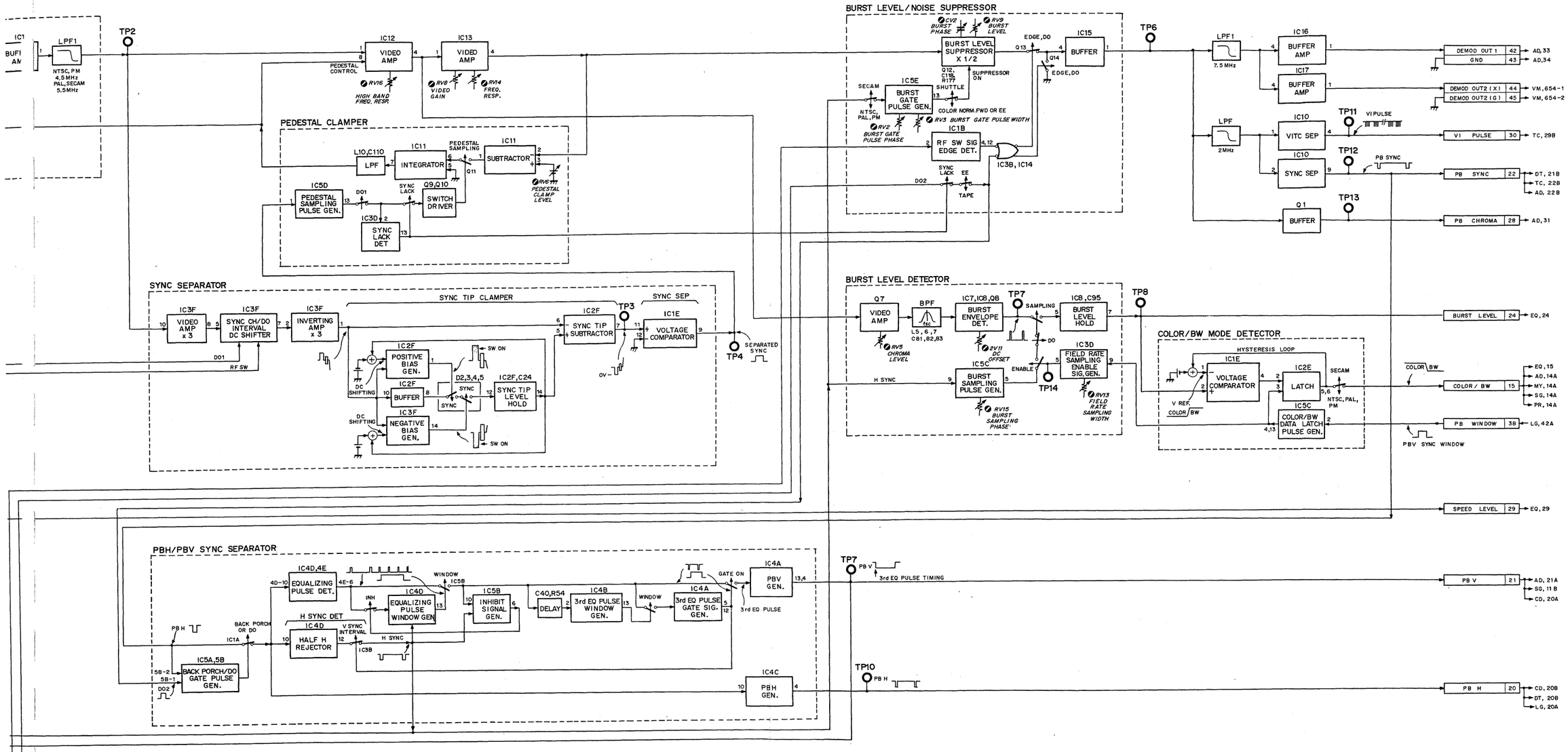

DM-25 BOARD BLOCK DIAGRAM

BOARD NO.1-606-661-11,12,13 AND UP

BVH-2000(J/U/C)	BVH-2180(J/U/C)
BVH-2000PS(AEP)	BVH-2180PS(AEP)
BVH-2000PM(BRZ)	BVH-2180PM(BRZ)

DT-05 BOARD; FOR 02/12/04/14 MODEL

DT Control

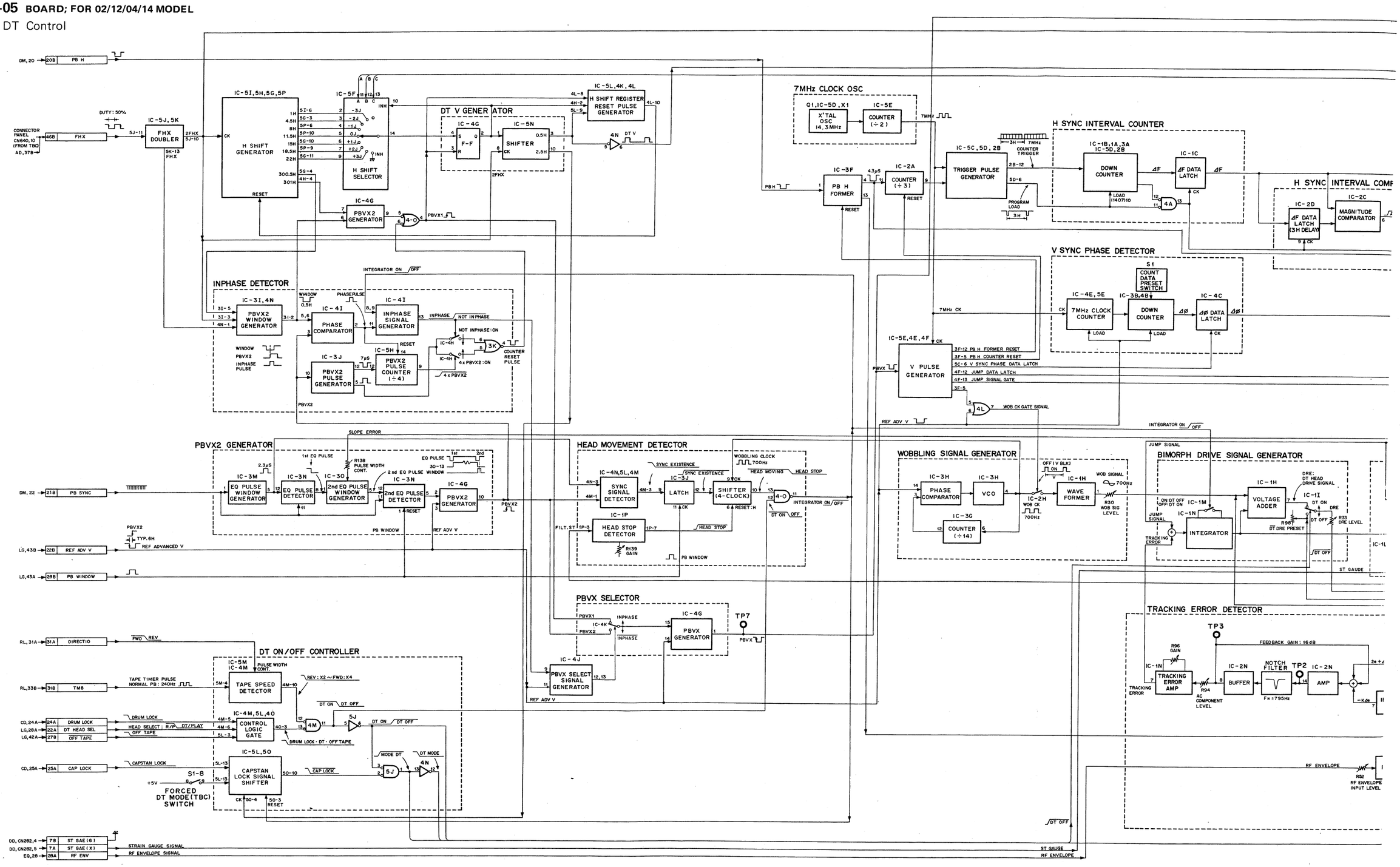

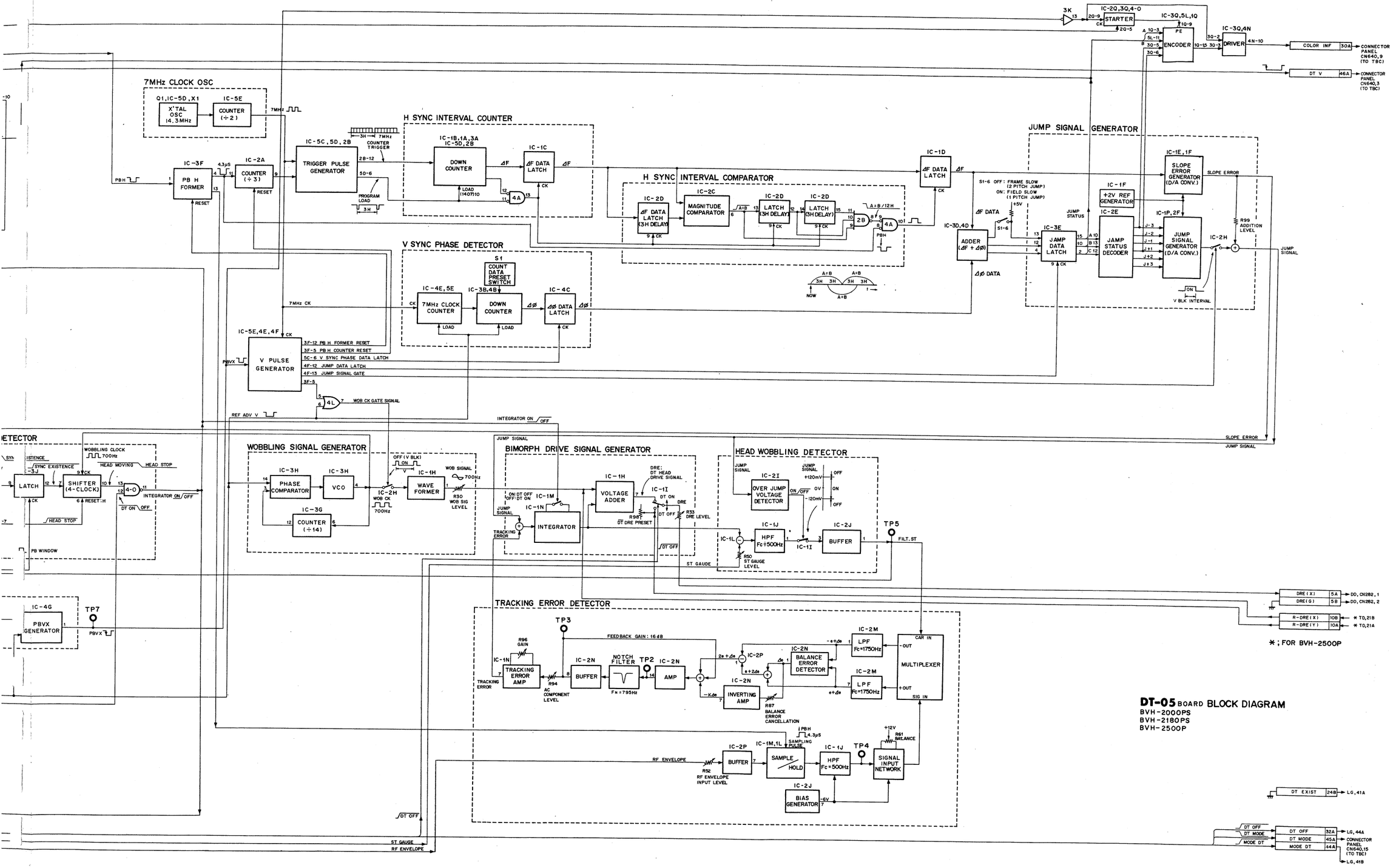

DT-05 BOARD BLOCK DIAGRAM
BVH-2000PS
BVH-2180PS
BVH-2500P

SERVO SYSTEM OVERALL BLOCK DIAGRAM

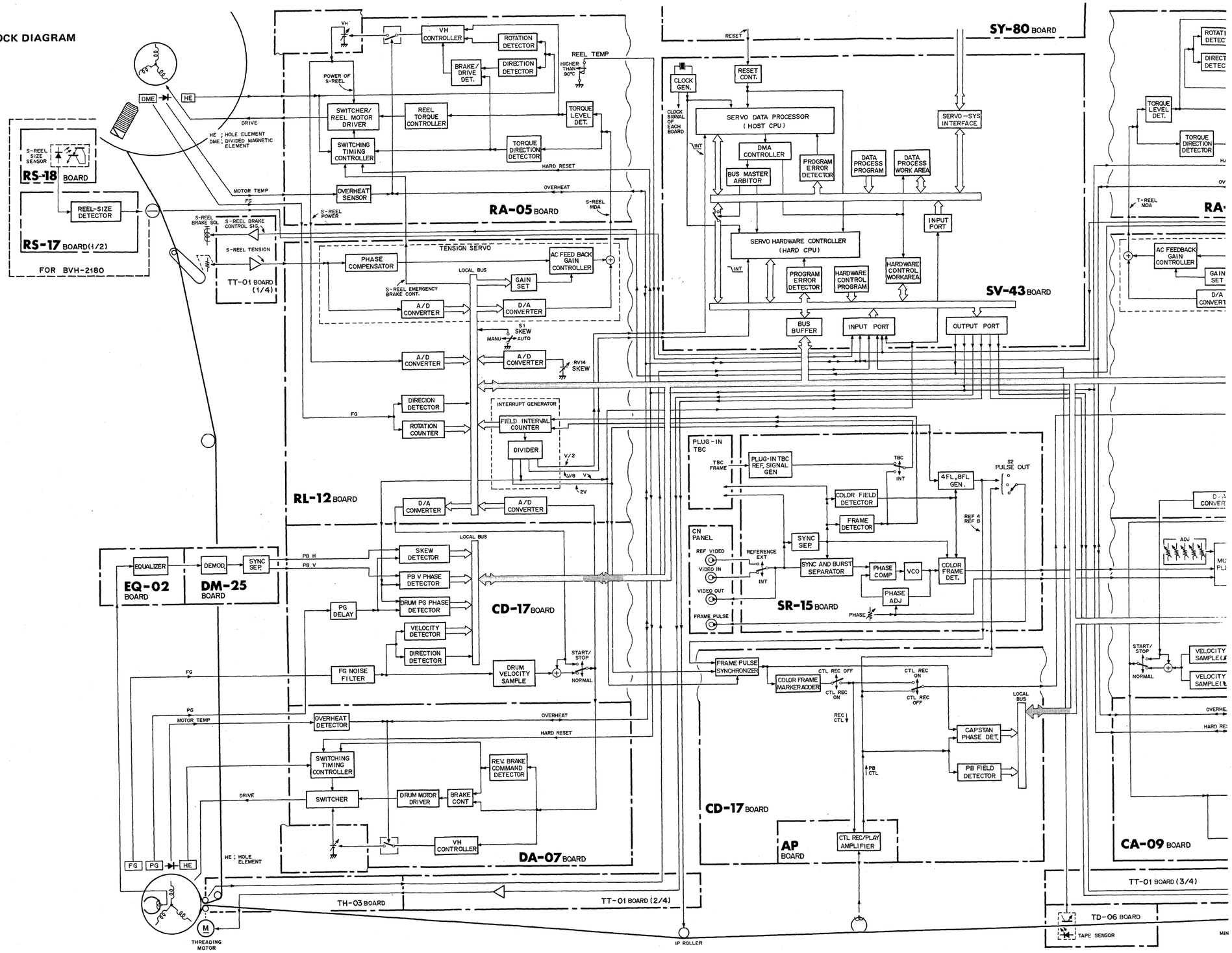

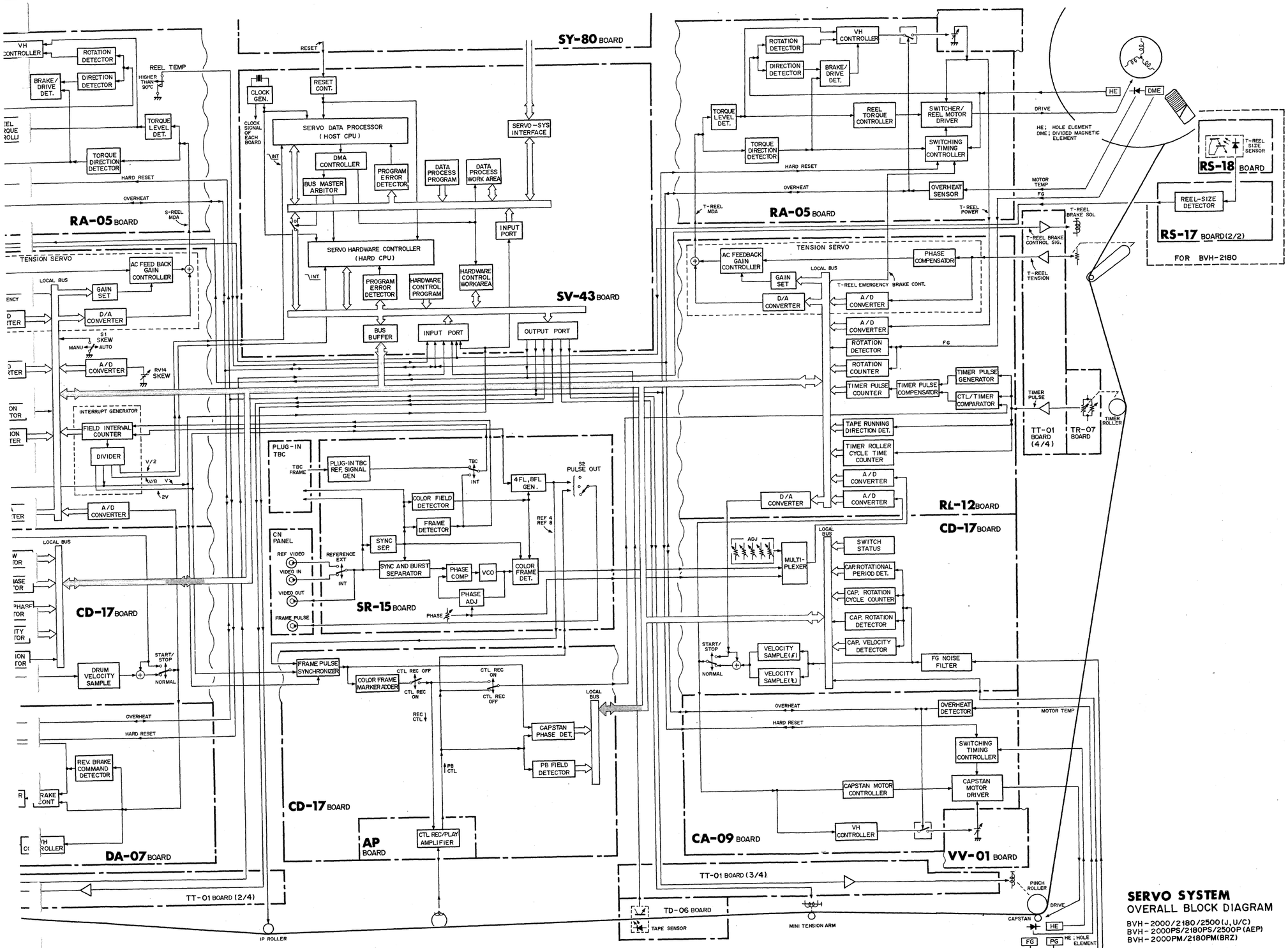

SERVO SYSTEM
OVERALL BLOCK DIAGRAM

BVH-2000/2180/2500(J,U/C)
BVH-2000PS/2180PS/2500P(AEP)
BVH-2000PM/2180PM(BRZ)

SV-43 BOARD

Servo CPU

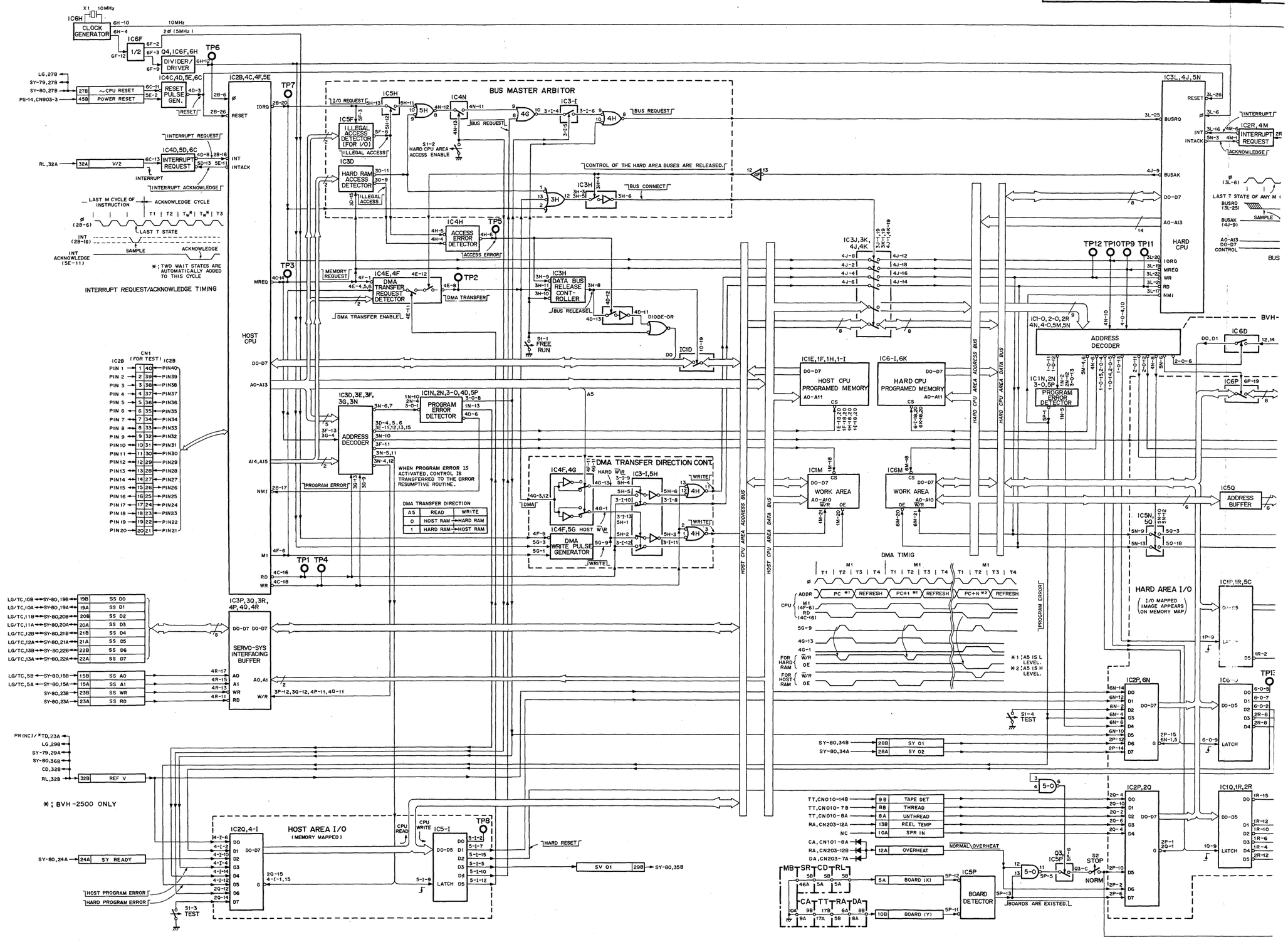

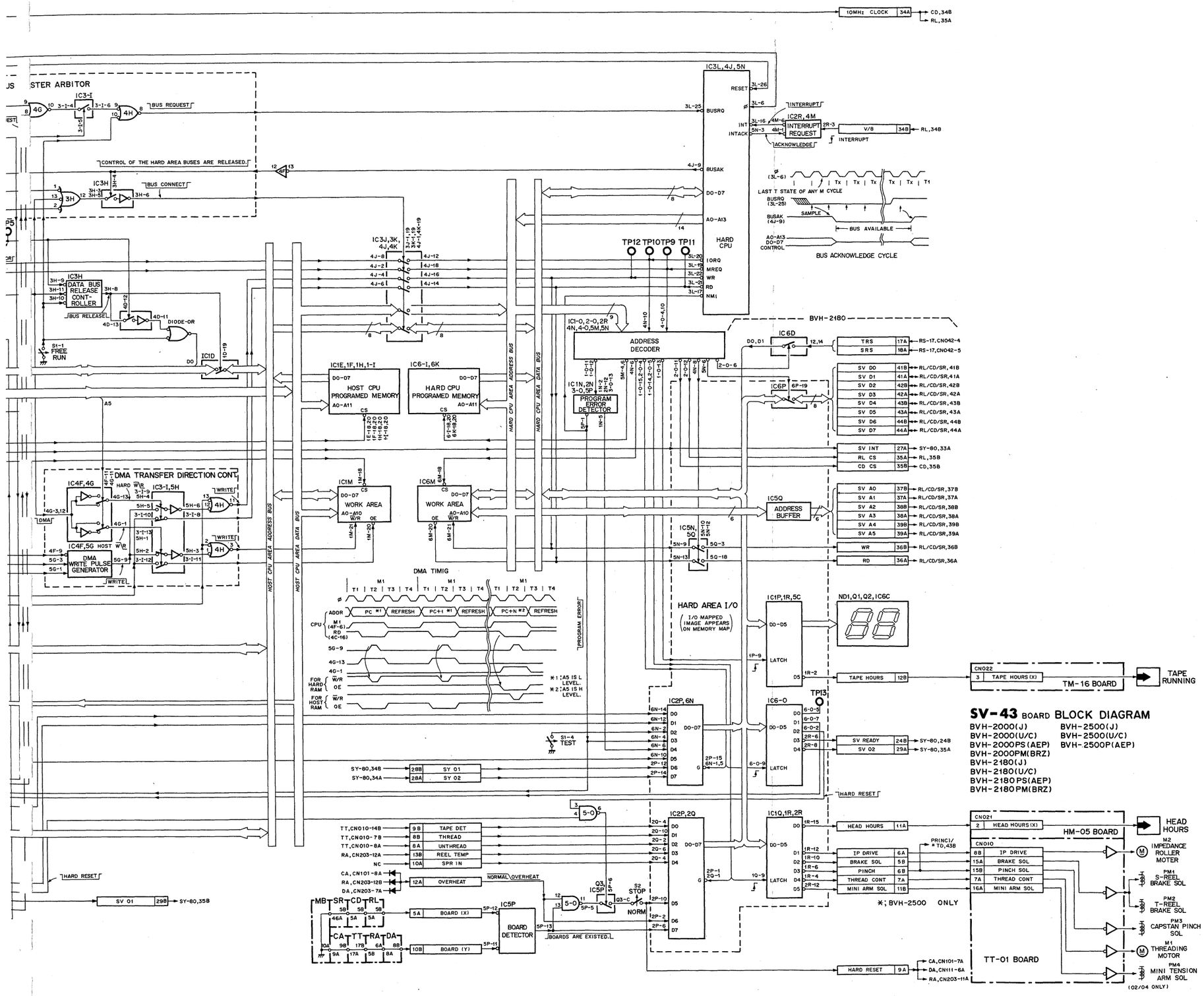

SV-43 BOARD BLOCK DIAGRAM

BVH-2000(J)
BVH-2000(U/C)
BVH-2000PS(AEP)
BVH-2000PM(BRZ)
BVH-2180(J)
BVH-2180(U/C)
BVH-2180PS(AEP)
BVH-2180PM(BRZ)
BVH-2500(J)
BVH-2500(U/C)
BVH-2500P(AEP)

RL-12 BOARD

Reel Servo

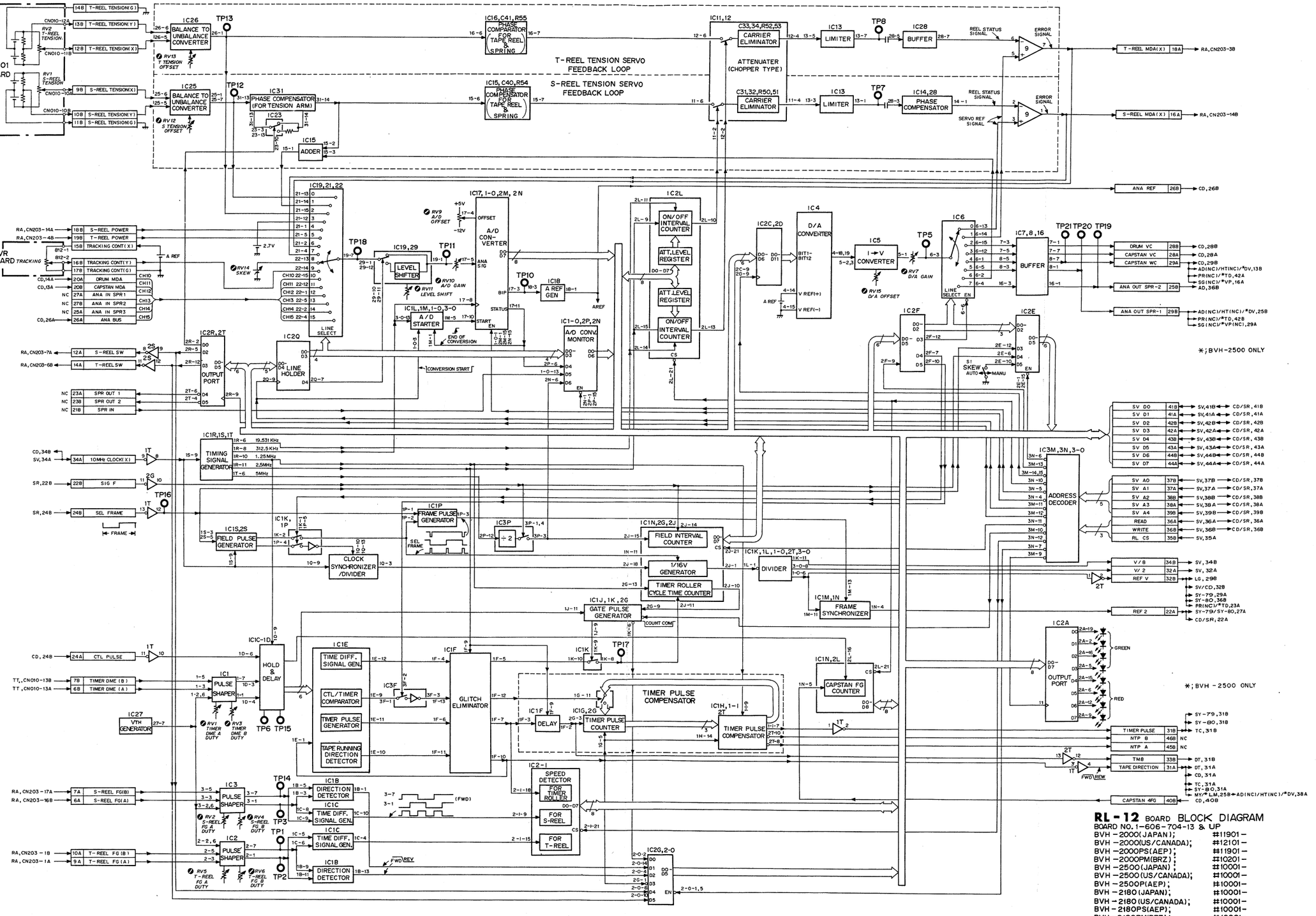

RL-12 BOARD BLOCK DIAGRAM

BOARD NO. 1-606-704-13 & UP

BVH-2000(JAPAN);	#11901-
BVH-2000(US/CANADA);	#12101-
BVH-2000PS(AEP);	#11901-
BVH-2000PM(BRZ);	#10201-
BVH-2500(JAPAN);	#10001-
BVH-2500(US/CANADA);	#10001-
BVH-2500P(AEP);	#10001-
BVH-2180(JAPAN);	#10001-
BVH-2180(US/CANADA);	#10001-
BVH-2180PS(AEP);	#10001-
BVH-2180PM(BRZ);	#10001-

CD-17 BOARD

Capstan/Drum Servo

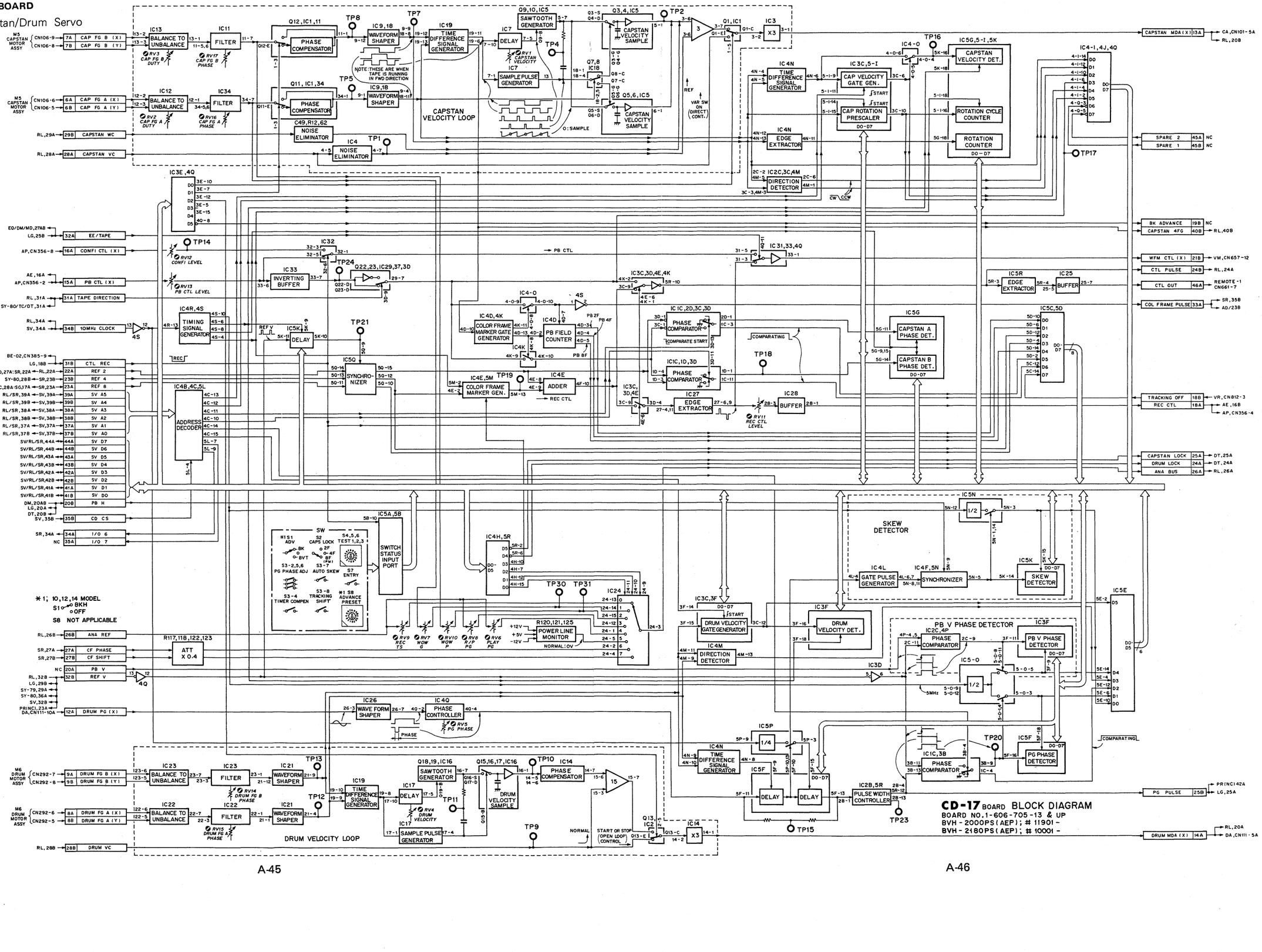

SR-15 BOARD

Servo Ref. Signal Generator

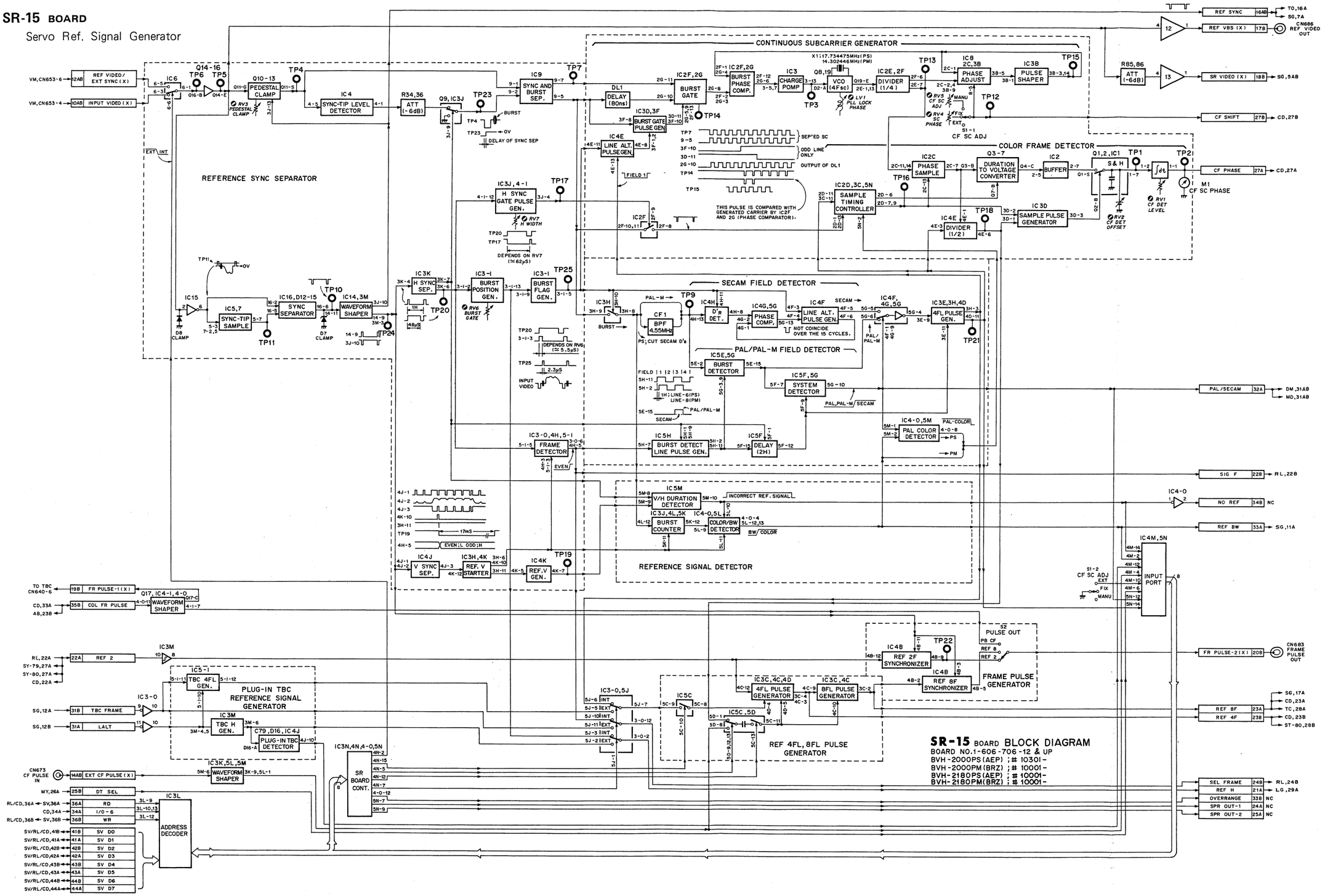

DA-07 BOARD

Drum Motor Driver

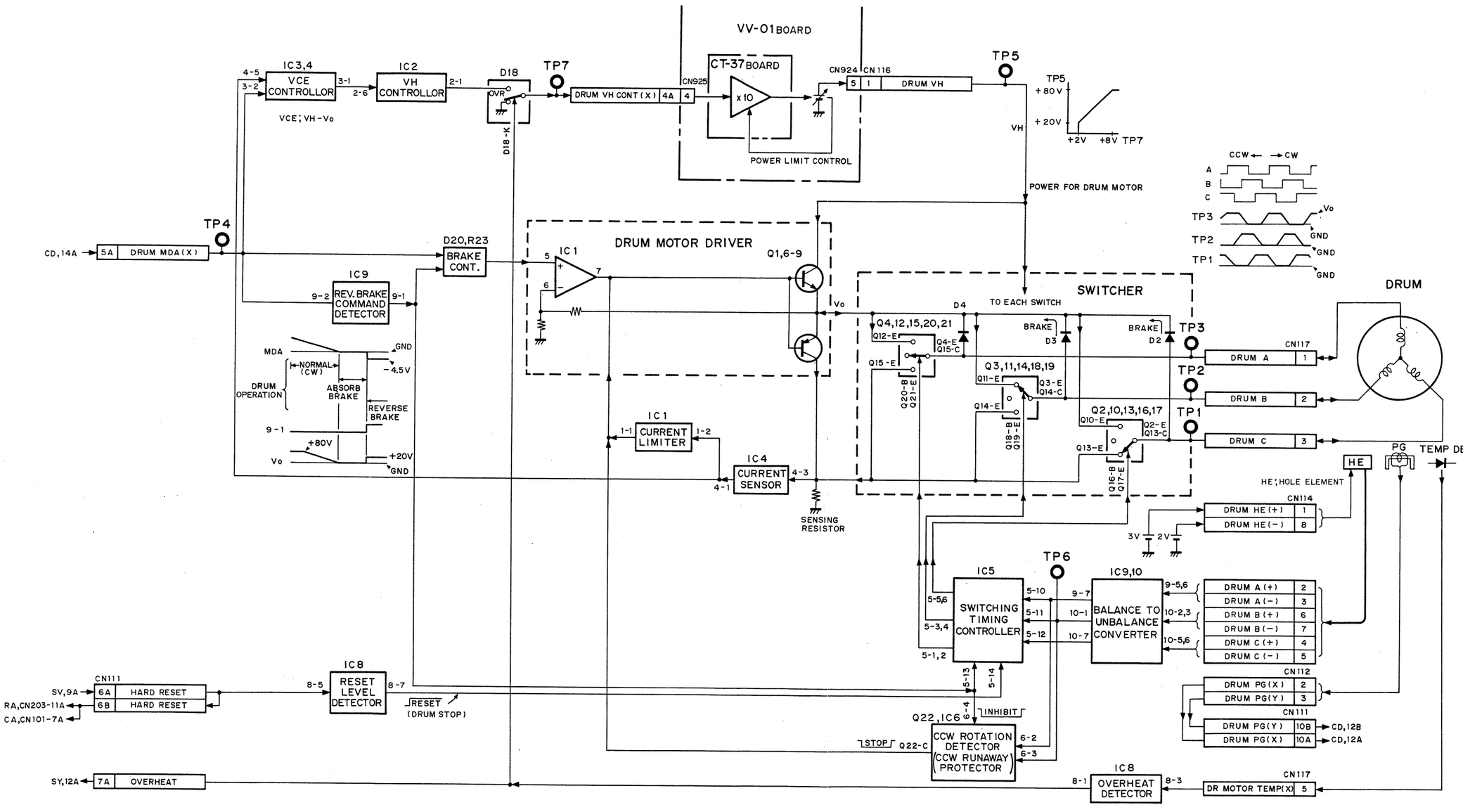

DA-07 BOARD BLOCK DIAGRAM

BVH-2000(JAPAN)
BVH-2000(US/CANADA)
BVH-2000PS(AEP)
BVH-2000PM(BRZ)
BVH-2500(JAPAN)
BVH-2500(US/CANADA)
BVH-2500P(AEP)
BVH-2180(JAPAN)
BVH-2180(US/CANADA)
BVH-2180PS(AEP)
BVH-2180PM(BRZ)

CA-09 BOARD

Capstan Motor Driver

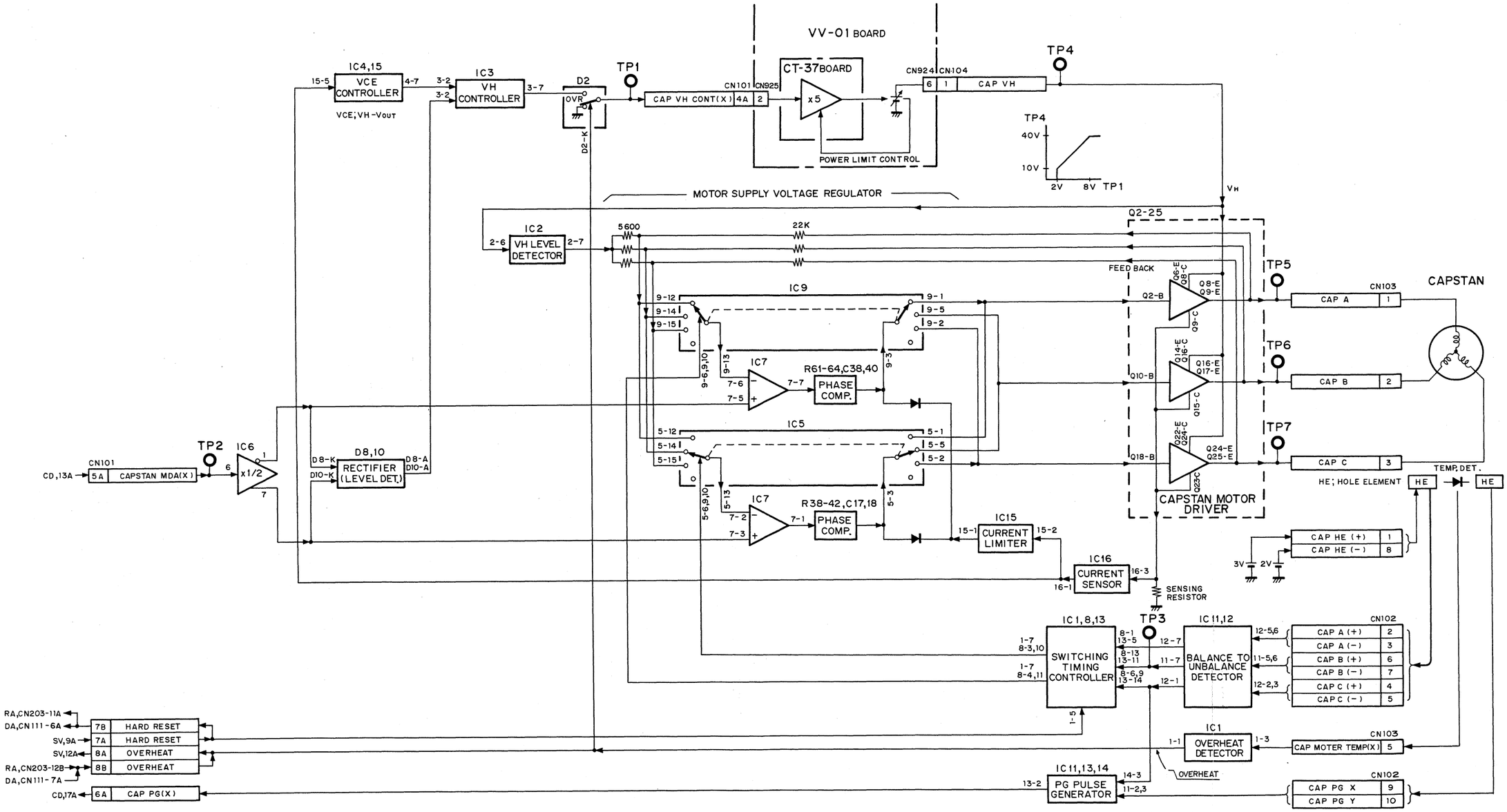

CA-09 BOARD BLOCK DIAGRAM

BVH-2000(JAPAN)
BVH-2000(US/CANADA)
BVH-2000PS(AEP)
BVH-2000PM(BRZ)
BVH-2500(JAPAN)
BVH-2500(US/CANADA)
BVH-2500P(AEP)
BVH-2180(JAPAN)
BVH-2180(US/CANADA)
BVH-2180PS(AEP)
BVH-2180PM(BRZ)

RA-05 BOARD

Reel Motor Driver

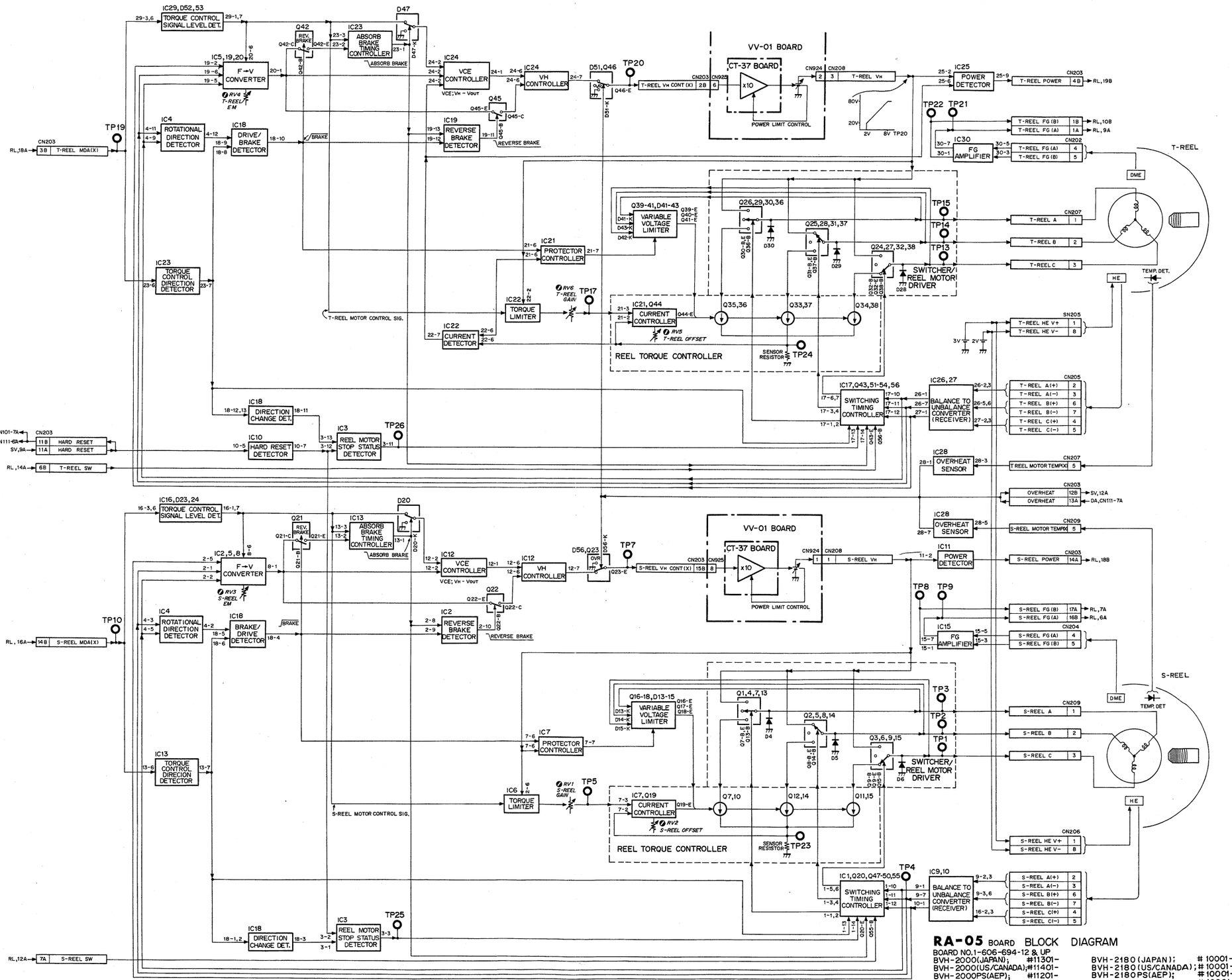

RA-05 BOARD BLOCK DIAGRAM

BOARD NO.1-606-694-12 & UP

BVH-2000(JAPAN);	#11301-
BVH-2000(US/CANADA);	#11401-
BVH-2000PS(AEP);	#11201-
BVH-2000PM(BRZ);	#10201-
BVH-2500(JAPAN);	#10001-
BVH-2500(US/CANADA);	#10001-
BVH-2500P(AEP);	#10001-
BVH-2180(JAPAN);	#10001-
BVH-2180(US/CANADA);	#10001-
BVH-2180PS(AEP);	#10001-
BVH-2180PM(BRZ);	#10001-

LG-02(A) BOARD

Logic

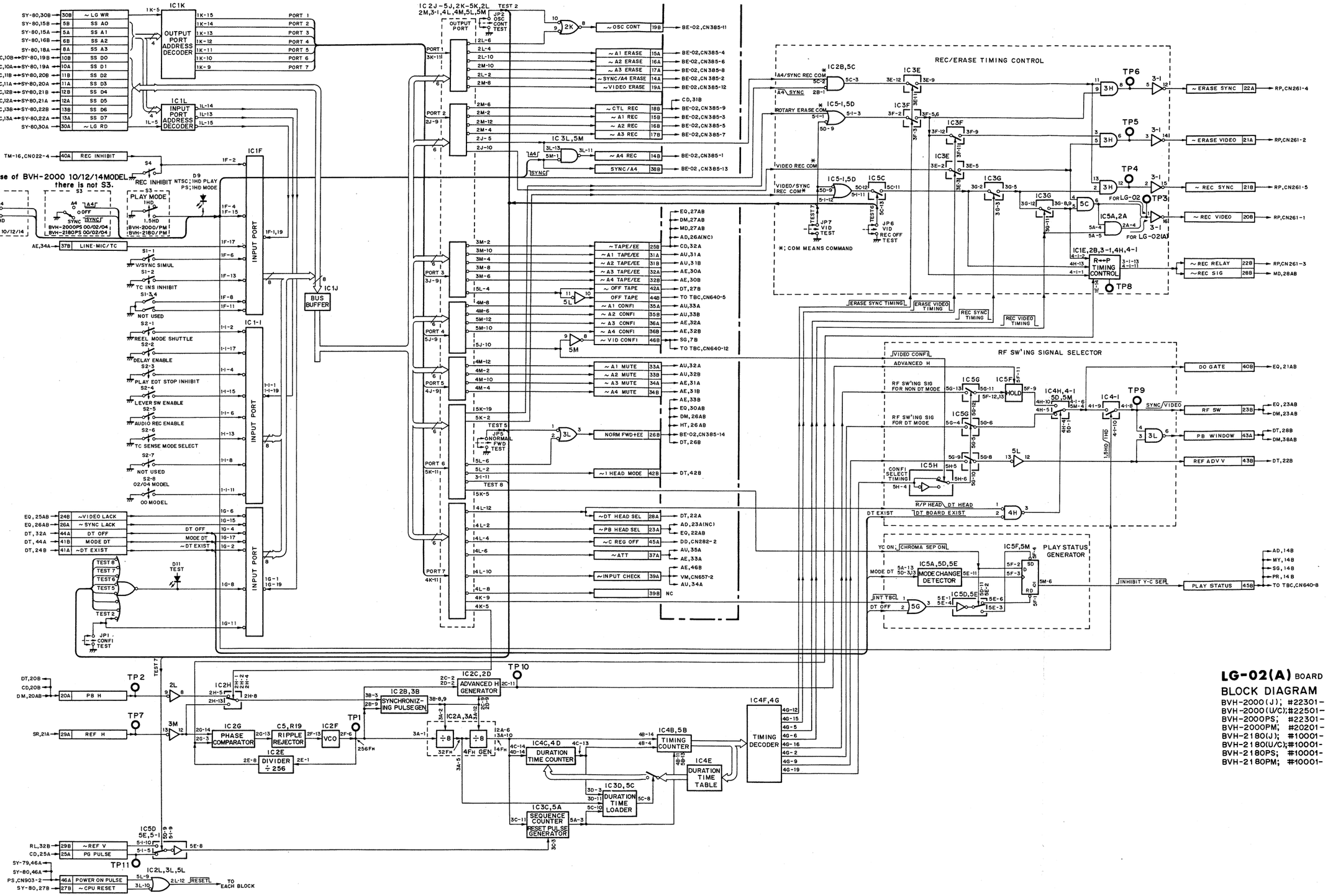

LG-02(A) BOARD
BLOCK DIAGRAM
BVH-2000(J); #22301-
BVH-2000(U/C);#22501-
BVH-2000PS; #22301-
BVH-2000PM; #20201-
BVH-2180(J); #10001-
BVH-2180(U/C);#10001-
BVH-2180PS; #10001-
BVH-2180PM; #10001-

SY-79 BOARD

System Control CPU-1

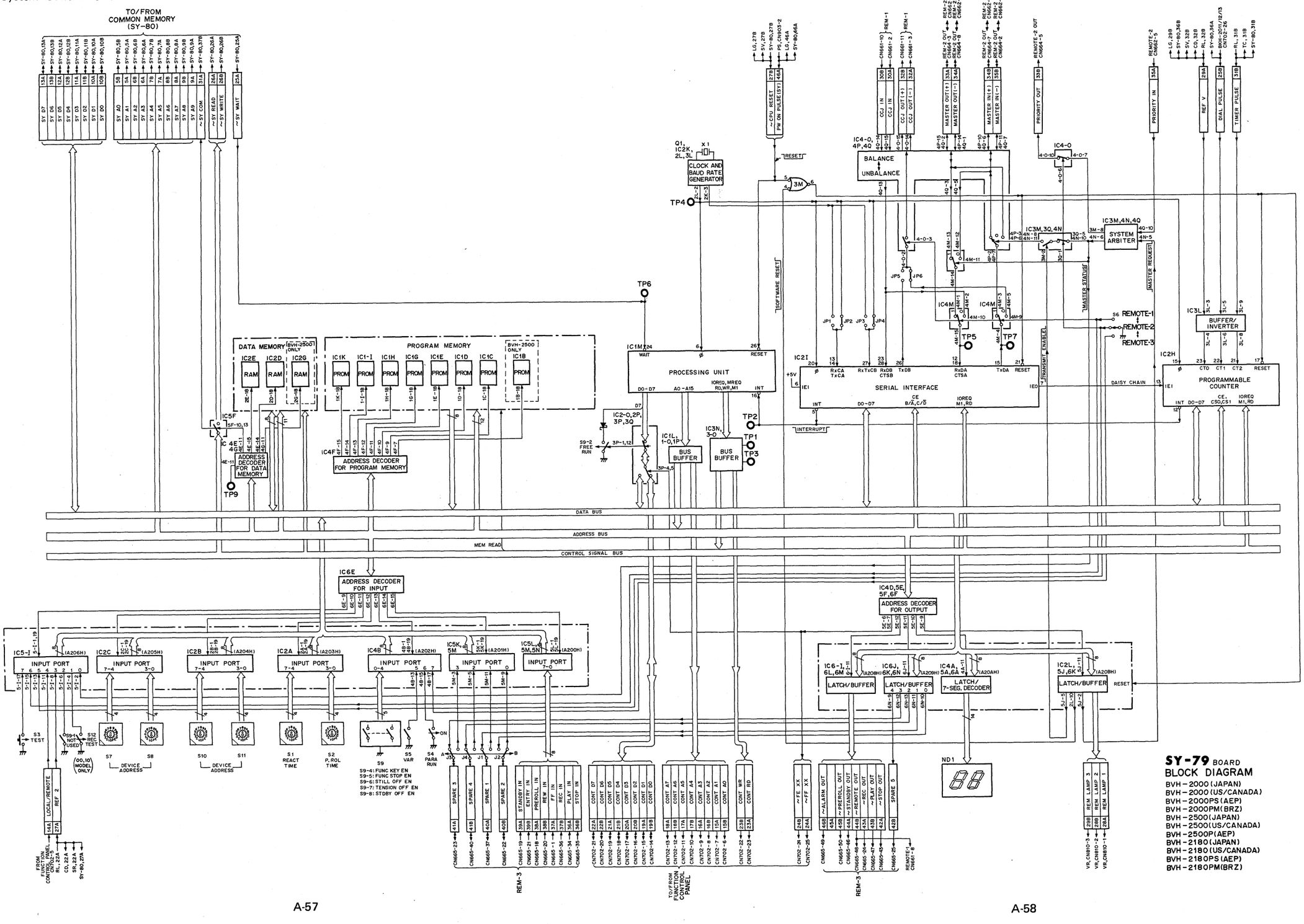

SY-80 BOARD
System Control CPU-2

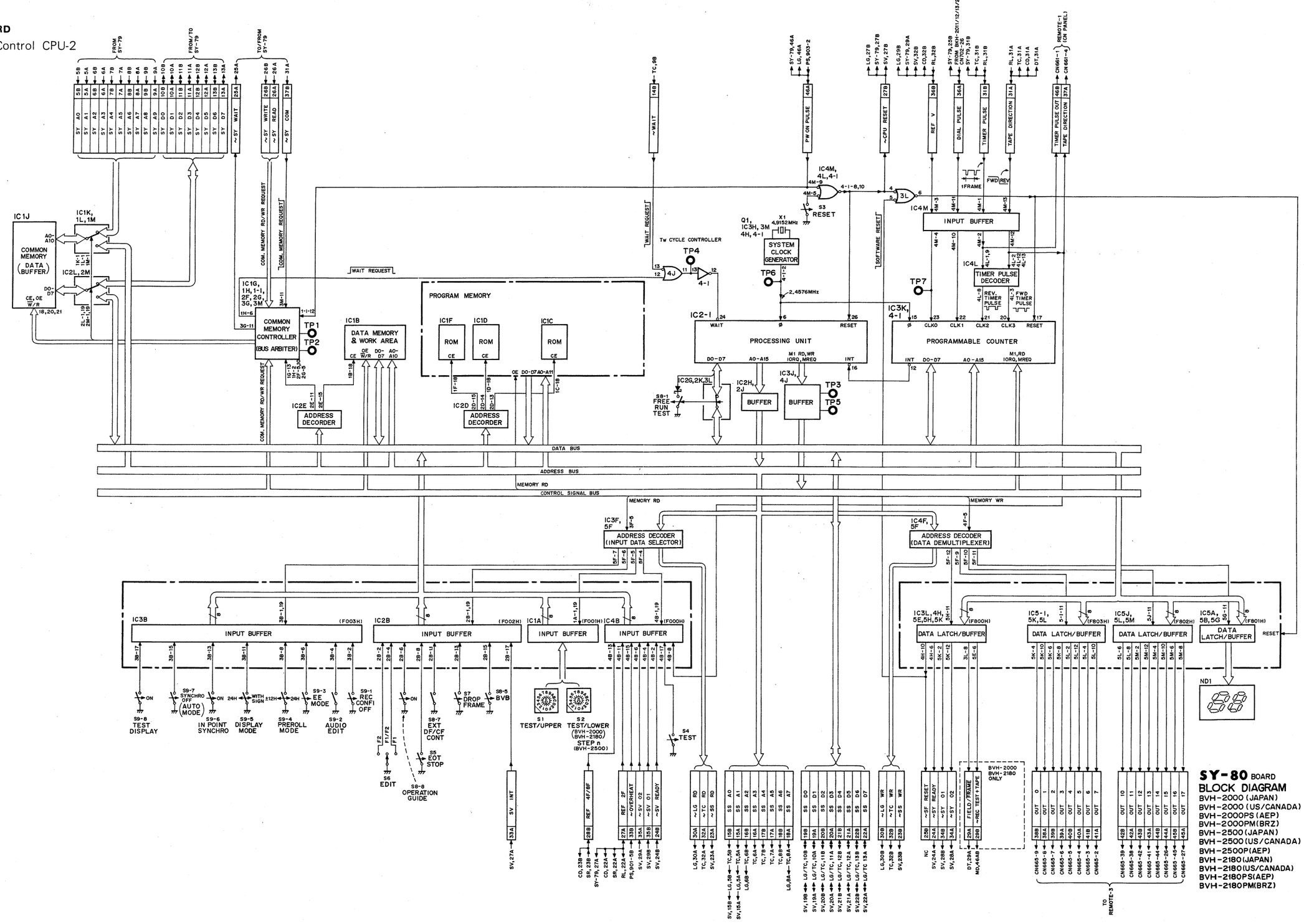

SY-80 BOARD
BLOCK DIAGRAM
BVH-2000 (JAPAN)
BVH-2000 (US/CANADA)
BVH-2000PS (AEP)
BVH-2000PM (BRZ)
BVH-2500 (JAPAN)
BVH-2500 (US/CANADA)
BVH-2500P (AEP)
BVH-2180 (JAPAN)
BVH-2180 (US/CANADA)
BVH-2180PS (AEP)
BVH-2180PM (BRZ)

POWER SUPPLY SYSTEM (1/2) AC-39, FV-01 BLOCK DIAGRAM

POWER SUPPLY SYSTEM (1/2)

AC-39 BOARD
FV-01 BOARD

(JAPAN) (US/CANADA,BRAZIL) (AEP) CB303 CN301 AC IN (L) AC IN (N) C301,302 L301,302 LINE FILTER S1 POWER SWITCH ON C304-307 L303 NOISE FILTER CB301 RUSH CURRENT PROTECTOR CURRENT LIMITER F301 109°C RY301 S301 (PS ONLY) VOLTAGE SELECTOR 220 TO 240V 100 TO 120V D301 RECTIFIER CB302 IN FACT, CIRCUIT BREAKER IS INSERTED IN GND-SIDE. WHILE VOLTAGE SELECTOR IS SET TO "100 TO 120V" MODE, RECTIFIERS ARE ALTERED TO VOLTAGE DOUBLER. D328-331 RECTIFIER D303,304,306 307,Q301,302 HIGH AC INPUT DETECTOR HIGH LOW D302,305, 308-311, Q303 BREAKER DRIVER D311-A D304-A D305-A D302-A D303-K RV301 SENSE ADJ 1.5sec POWER ON D321-327,332,IC301 LOW AC INPUT DETECTOR 301-13 RV303 SENSE ADJ D312-316,334,IC301 LINE VOL.DET. (WITH DELAY) 301-1 RV302 SURGE CURRENT ADJ D317-319 IC301 RELAY CONTROLLER 301-7 301-5 Q304,305 RELAY DRIVER Q304-B Q305-B Q304-C Q305-C 301-3 301-8

CN307 DC 180V TO 380V 4 VV,CN201-2 CN308 DC 180V TO 380V 3 FV-02,CN601-2

CN305 4 +13V POWER OF EACH BLOCK CN307 2 DC 180 TO 380V

AC-39 BOARD

PRIMARY CIRCUIT SECONDARY CIRCUIT

PH301 LINE ACTIVE

CN921 P.D.S 11 CN915-2 P-A COM 8 CN915-1 P-A 1 1 CN915-6 P-A 2 2 CN915-7 P-A 3 3 CN915-8 P-A 4 4 CN915-9 P-A 5 5 CN915-10 P-A 6 6 CN915-11 P-A 7 7 CN915-12 PS-14

RY101 RY102

CN101 2 DC 180 TO 380V C101 L101 NOISE FILTER TP102 ST-21 BOARD D351-356 Q351,352 STARTER TP103 T106 D357 Q353 OPERATION DETECTOR D357-A D105 START D106 NORMAL C139,D107 PEAK LEVEL DETECTOR D107-A D107-K IC372 VOLTAGE DETECTOR 372-7 372-6 372-2 IC371 REF. REG. 371-1 371-2 D374-377 Q371,372 POWER DOWN OVERHEAT WIRED-OR D378-381 Q374,375 RELAY DRIVER Q375-C RY102 IC372 VOLTAGE DETECTOR 372-10 372-11 372-14 LOW RELAY OFF PA-19 BOARD

CN104 4 POWER ACTIVE CN311 4 P.A" Q306-309 REGULATOR STOPPER Q308-B Q308-C Q307-B Q306-B CN311 DEAD CONT 2 CN104 2

CN102 4 +13V D154 Q112 VOLTAGE LIMITER C127,128 L110,111 D108,109 T104 TP112 C143,144 L108,109 RIPPLE FILTER D153,Q113 VOLTAGE LIMITER D149 Q108,109 +13V REG. Q108-E Q108-C D149-K CN923 +13V (SOL) 1,2 CN916-5,6 FAN (M7) (+) 5 CN916-1 D150 Q110,111 +13V REG. Q110-E Q110-C D150-K CN103 FAN (X) 3 CN54,CN470-3 FAN

TP110 D103 L106 C140,141,L107 FILTER C146,147 L133 FILTER T108 L113-131, C151-170 D110-113 D151 (GREEN) CN106 FAN (+) 3,4 CN602-3,4 +17V(2) 7 CN602-7 SYNC (2) 6 CN602-6 FV-02

DC 180V TO 380V Q103,104 C123,124 TP105 T107 T105 D173-176 CURRENT DETECTOR POWER OF EACH BLOCK CT-36-4 BOARD THIS SIGNAL IS COMPARED WITH THE REFERENCE (FEEDBACK SIG.) IC171,Q171,172 SWITCHING PULSE WIDTH CONTROLLER 171-16 171-1,15 171-2 Q171-C Q172-C 171-5 171-4 V_{REF} Q175 LOST POWER DETECTOR Q175-B Q175-C D172,Q174 HIGH VOLTAGE DETECTOR Q174-C D172-K C175 SOFT STARTER POWER SUPPLY FOR POWER SUPPLY SYSTEM

TP115 T109 IC101 Q107 SYNC PULSE GENERATOR 101-5 Q107-C Q107-E D273-275,Q272 ERROR MEMORY D273-K D275-K D274-K D52 POWER OF EACH BLOCK Q105,106 TP113 V_{REF} 271-2 271-15 IC271,Q271 SWITCHING PULSE WIDTH CONTROLLER 271-4 271-10 271-9 Q271-B C271,L271 RIPPLE FILTER D271, 272 POWER DETECT CT-38 BOARD POWER SUPPLY FOR POWER SUPPLY CONTOROLLER D113-115 D142-145 D138-141 D122-125 D126-129 D130-133 D134-137 D118-120 D114-116 RIPPLE FILTER CN107 +17V (S) 12 CN203-6 SYNC (S) 11 CN203-5 +17V (T) 9 CN203-3 SYNC (T) 8 CN203-2 +17V (C) 6 CN202-6 SYNC (C) 5 CN202-5 +17V (D) 3 CN202-3 SYNC (D) 2 CN202-2 VV-01 CN928 +19V 1 CN917-1 -19V 5 CN917-5 PS-14

PRIMARY CIRCUIT SECONDARY CIRCUIT

TP108 T101 Q101,102 DC180V TO 380V C103,104 TP104 T103 T102 TP107 C113-115 L102 RIPPLE FILTER D101,102 D173-176 CURRENT DETECTOR POWER OF EACH BLOCK CT-36-1 BOARD THIS SIGNAL IS COMPARED WITH THE REFERENCE IC171,Q171-173 SWITCHING PULSE WIDTH CONTROLLER 171-16 171-1,15 171-2,1 Q171-C Q172-C Q173-B 171-4 V_{REF} Q175 LOST POWER DETECTOR Q175-B Q175-C D172,Q174 HIGH VOLTAGE DETECTOR Q174-C D172-K C175 SOFT STARTER SYNCHRONIZE SIGNAL POWER SUPPLY FOR +5V SYSTEM C116-118 L103,104 FILTER C119-121 L105 FILTER D146 (GREEN)

CN922 +6.8V 1,2 PS,CN914-1,2 +6.8V 3,4 PS,CN914-3,4

CN105 OVERHEAT DET 3 CN603 3 OVERHEAT DET S602 HIGHER THAN 90°C S102 HIGHER THAN 90°C OVERHEAT SENSE 2 CN603 2 OVERHEAT SENSE S601 HIGHER THAN 70°C S101 HIGHER THAN 70°C FV-02 BOARD

CN915 4 OVERHEAT(X) CN921 OVERHEAT(X) 9 CN901 OVERHEAT 58 SY-80,338 SW1 HIGHER THAN 90°C PS-14 BOARD

FV-01 BOARD

FV-01 BOARD

POWER SUPPLY SYSTEM BLOCK DIAGRAM (1/2)

AC-39 BOARD
FV-01 BOARD

BVH-2000 (JAPAN)	BVH-2180 (JAPAN)
BVH-2000 (US/CANADA)	BVH-2180 (US/CANADA)
BVH-2000 PS (AEP)	BVH-2180PS (AEP)
BVH-2000 PM (BRZ)	BVH-2180PM (BRZ)
BVH-2500 (JAPAN)	BVH-2500P (AEP)
BVH-2500 (US/CANADA)	

POWER SUPPLY SYSTEM (2/2) PS-14, VV-01, FV-02 BLOCK DIAGRAM

POWER SUPPLY SYSTEM (2/2)

PS-14 BOARD
VV-01 BOARD
FV-02 BOARD

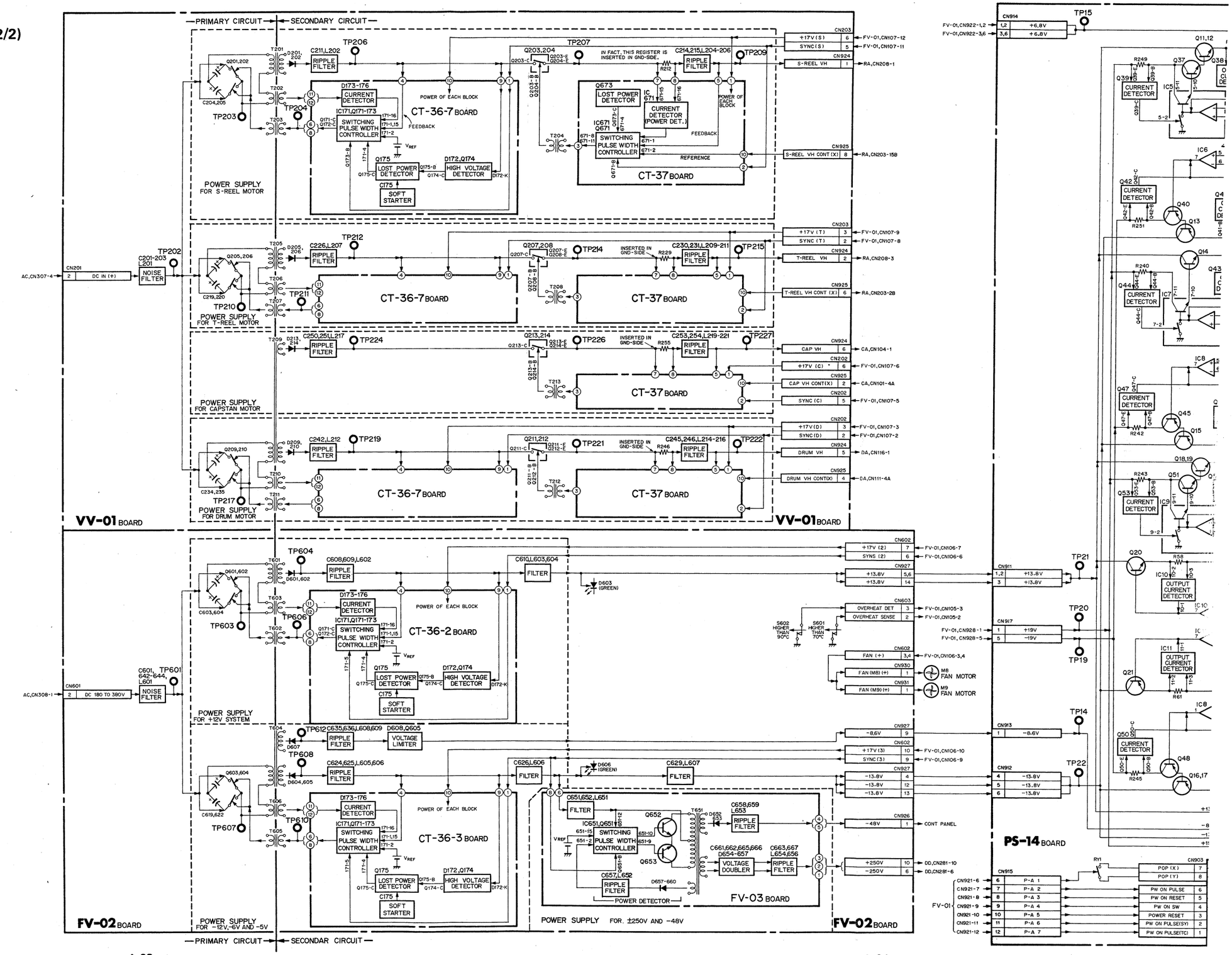

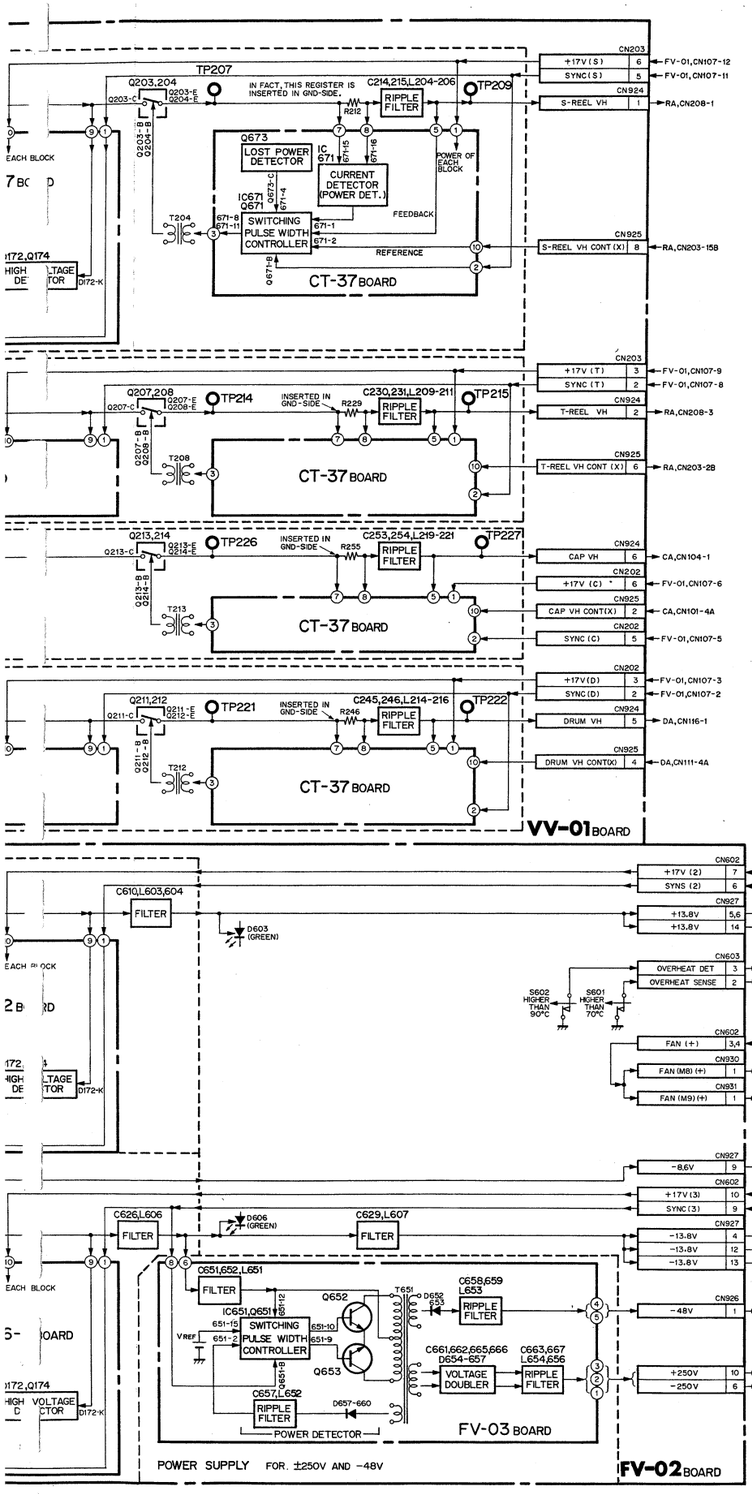
TP207
Q203,204
IN FACT, THIS REGISTER IS INSERTED IN GND-SIDE.
C214,215,L204-206
TP209
RIPPLE FILTER
Q673
LOST POWER DETECTOR
IC671 Q671
CURRENT DETECTOR (POWER DET.)
SWITCHING PULSE WIDTH CONTROLLER
FEEDBACK
REFERENCE
T204
CT-37 BOARD
CN203
+17V (S) 6 FV-01,CN107-12
SYNC (S) 5 FV-01,CN107-11
CN924
S-REEL VH 1 RA,CN208-1
CN925
S-REEL VH CONT (X) 8 RA,CN203-15B
TP214
TP215
C230,231,L209-211
T208
T-REEL VH CONT (X) 6 RA,CN203-2B
TP226
TP227
C253,254,L219-221
T213
CAP VH CONT(X) 2 CA,CN101-4A
SYNC (C) 5 FV-01,CN107-5
TP221
TP222
C245,246,L214-216
T212
DRUM VH CONT(X) 4 DA,CN111-4A
VV-01 BOARD
C610,L603,604
FILTER
D603 (GREEN)
CN602
+17V (2) 7 FV-01,CN106-7
SYNS (2) 6 FV-01,CN106-6
CN927
+13.8V 5,6
+13.8V 14
CN603
OVERHEAT DET 3 FV-01,CN105-3
OVERHEAT SENSE 2 FV-01,CN105-2
S602 HIGHER THAN 90°C
S601 HIGHER THAN 70°C
CN602
FAN (+) 3,4 FV-01,CN106-3,4
CN930
FAN (M8) (+) 1 M8 FAN MOTOR
CN931
FAN (M9) (+) 1 M9 FAN MOTOR
C626,L606
C629,L607
D606 (GREEN)
CN927
-8.6V 9
CN602
+17V (3) 10 FV-01,CN106-10
SYNC (3) 9 FV-01,CN106-9
CN927
-13.8V 4
-13.8V 12
-13.8V 13
CN926
-48V 1 CONT PANEL
C651,652,L651
FILTER
IC651,Q651
SWITCHING PULSE WIDTH CONTROLLER
Q652
Q653
T651
D652 D653
C658,659 L653
RIPPLE FILTER
C661,662,665,666 D654-657
VOLTAGE DOUBLER
C663,667 L654,656
RIPPLE FILTER
C657,L652
RIPPLE FILTER
D657-660
POWER DETECTOR
FV-03 BOARD
+250V 10 DD,CN281-10
-250V 6 DD,CN281-6
POWER SUPPLY FOR. ±250V AND -48V
FV-02 BOARD
CN914
FV-01,CN922-1,2 1,2 +6.8V
FV-01,CN922-3,6 3,6 +6.8V
TP15
TP6
TP17
TP18
TP7
TP8
TP11
TP12
TP21
TP20
TP19
TP13
TP14
TP22
TP10
Q11,12
Q37
Q38
Q39
Q40
Q41
Q13
Q42
Q43
Q14
Q44
Q45
Q15
Q46
Q47
Q18,19
Q51
Q52
Q53
Q20
Q21
Q48
Q16,17
Q49
Q50
IC5
IC6
IC7
IC8
IC9
IC10
IC11
RV6 +12V OUTPUT VOLTAGE
RV7 -12V OUTPUT VOLTAGE
RV8 +12V OUTPUT VOLTAGE
RV9 -12V OUTPUT VOLTAGE
RV11 12V OUTPUT VOLTAGE
RV12 +12V OUTPUT VOLTAGE
RV13 -12V OUTPUT VOLTAGE
RV10 12V OUTPUT VOLTAGE
CURRENT DETECTOR
OUTPUT CURRENT DETECTOR
CN911
1,2 +13.8V
3 +13.8V
CN917
1 +19V
5 -19V
CN913
1 -8.6V
CN912
4 -13.8V
5 -13.8V
6 -13.8V
+13.8V DC
-8.6V DC
-13.8V DC
+19V DC
+6.8V DC
PS-14 BOARD
CN915
P-A 1
P-A 2
P-A 3
P-A 4
P-A 5
P-A 6
P-A 7
RV1
CN903
POP (X) 7 LA,CN603-1
POP (Y) 8 LA,CN603-2
PW ON PULSE 6
PW ON RESET 5 BE-02,CN384-4
PW ON SW 4 RP,CN262-4
POWER RESET 3 SV,45B
PW ON PULSE(SY) 2 LG,46A:SY-79/80-46A
PW ON PULSE(TC) 1 TC,46B
FV-01 CN921-6 CN921-7 CN921-8 CN921-9 CN921-10 CN921-11 CN921-12
Q1-3
Q22,54
Q23
Q24
IC1
R1,4.7
R70
FOR REMOTE SENSING
RV1 +5V OUTPUT VOLTAGE
Q10
Q35
Q36
IC4
TP5
R28
R129
RV5 +5V OUTPUT VOLTAGE
Q6-9
Q31,55
Q32
Q33
IC3
TP4
R16,19,22,25
R111
RV4 +5V VOLTAGE
IC8
RV9 -12V OUTPUT VOLTAGE
Q46
Q45
Q15
TP9
R43
R52,55
R243
R242
R240
R241
R40
R37
R251
R255
R246
R229
R212
R56
R61
R245
R46,49
R104
R79
R10
R13
R111
R129
R28
R70
R24
R1,4.7
TP1
TP16
TP2
TP3
TP25
TP24
TP23
TP26
D15,17,20,21 IC14
LOST POWER DETECTOR
D15-K
D17-K
D21-A
D20-A
14-1,7
CN916
1 FAN (M7)(+)
5 +13V (SOL)
6 +13V (SOL)
CN915
4 OVERHEAT (X)
FV-01 CN923-5 CN923-1 CN923-2 CN921-9
SW1 OVERHEAT SENSE (HIGHER THAN) 90°C
CN901
+12V(EQ,DM,MD) 1B AD,DM,EQ,MD MY,PR,SG
+12V(EQ,DM,MD) 2B
+12V 3B RP
+12V 4B VM
+12V SENSE 1A AD,DM,EQ,MD MY,PR,SG
-12V SENSE 5A MD
-12V(EQ,DM,MD) 6A AD,DM,EQ,MD MY,PR,SG
-12V(EQ,DM,MD) 6B
-12V 7A RP
-12V 7B VM
CN902
+5V 16AB REMOTE-1
CN901
+12V(LG-DT) 8A CD,DT,LG,RL,SR SV,SY-79/80,TC
+12V(LG-DT) 8B
+12V 9A CA
+12V 9B DA
+12V 10A RA
+12V 10B TT
+12V 11B CONT PANEL
-12V 14A CD,DT,LG,RL,SR SV,SY-79/80,TC
-12V 15A
-12V 15B CA
-12V 16A DA
-12V 16B RA
-12V 17A TT
-12V 17B CONT PANEL
CN902
+5V(SV-DT) 6B
+5V(SV-DT) 7B CD,DT,RL SR,SV
+5V(LG-SY) 8AB LG,SY-79/80
+5V(TC) 9AB TC
+5V 10A CA
+5V 10B DA
+5V 11A RA
+5V 11B TT
+5V 12A CONT PANEL
+5V 12B
CN901
+12V 22AB LA
+12V 23A BE-02
+12V 23B BE-03
+12V 24A REMOTE-1
-12V 25B REMOTE-1
-12V 18AB LA
-12V 19A BE-02
-12V 19B BE-03
CN902
+5V (TBC) 1AB AD,MY,SG
+5V (MY) 2AB MY
+5V(MD,DM) 3AB DM,EQ,MD
+5V 4B VM
+5V SENSE 5A DM,EQ
CN902
-5V (AD) 5B AD,MY, PR,SG
-5V (AD) 6A
5V GND SENSE 4A DM,EQ
CN902
-6V (AD) 7A AD
CN915
P.D.S 2 FV-01,CN921-2
CN901
+19V 24B DD,CN281-7
CN905
FAN (M7)(+) 1 M7 FAN MOTOR
CN903
+12V (F) 9 TT,CN010-4A
+12V (F) 10 TT,CN010-4B
CN901
OVERHEAT 5B SY-80,33B
CN918
FAN(+) 1 MB,CN402-1
PS-14 BOARD
POWER SUPPLY SYSTEM
BLOCK DIAGRAM (2/2)
FV-02 BOARD, PS-14 BOARD,
VV-01 BOARD
BVH-2000/2180/2500(J/U/C)
BVH-2000PS/2180PS/2500P(AEP)
BVH-2000PM/2180PM(BRZ)

SECTION B
SEMICONDUCTOR PIN ASSIGNMENTS

TYPE	PAGE
03P05M	B-5
10E-1	*
10E-2	*
1N4148H	*
1S1555	*
1S1585	*
1S1587	*
1S2076	*
1S2139	*
1S2473	*
1S2687	*
1SS53	*
1SS84	*
1SS106	*
1SS119	*
1SS120	*
1SS133	*
1SS148	*
1SZ52	*
2N2369	B-6
2P5M	B-5
2SA530H	B-5
2SA678	B-5
2SA684	B-5
2SA706	B-5
2SA715	B-5
2SA733	B-5
2SA772	B-5
2SA773	B-5
2SA798	B-5
2SA844	B-5
2SA872	B-5
2SA872A	B-5
2SA884	B-5
2SA911	B-5
2SA925	B-5
2SA952	B-5
2SA966	B-5
2SA979	B-5
2SA995	B-5
2SA1005	B-5
2SA1013	B-5
2SA1015	B-5
2SA1026	B-5
2SA1027R	B-5
2SA1048	B-5
2SA1115	B-5
2AS1120	B-5
2SA1156	B-5
2SA1175	B-5
2SA1186	B-5
2SA1220A	B-5
2SB548	B-5
2SB733	B-6
2SB734	B-6
2SB739	B-5
2SB740	B-5
2SB772	B-5
2SB825	B-6
2SC403	B-6
2SC634A	B-6
2SC641K	B-6
2SC689H	B-6
2SC710	B-6
2SC945	B-6
2SC1124	B-6
2SC1126	B-6
2SC1162	B-6
2SC1173	B-6
2SC1252	B-6
2SC1363	B-6
2SC1364	B-6
2SC1474	B-6
2SC1475	B-6
2SC1583	B-6
2SC1633	B-6
2SC1634	B-6
2SC1636	B-6
2SC1733	B-6
2SC1762	B-6
2SC1775	B-6
2SC1775A	B-6
2SC1815	B-6
2SC1890A	B-6
2SC1908	B-6
2SC1986	B-6
2SC2001	B-6
2SC2009	B-6
2SC2011	B-6
2SC2012	B-6
2SC2021	B-6
2SC2236	B-6
2SC2259	B-6
2SC2315	B-6
2SC2383	B-6
2SC2458	B-6
2SC2551	B-6
2SC2555	B-6
2SC2593	B-6
2SC2603	B-6
2SC2654	B-6
2SC2690A	B-6
2SC2724	B-6
2SC2752	B-6
2SC2773	B-6
2SC2785	B-6
2SC2837	B-6
2SC2878	B-6
2SC2901	B-6
2SC2944	B-6
2SC3068	B-6
2SC3559	B-6
2SD313HP	B-6
2SD414	B-6
2SD773	B-6
2SD774	B-6
2SD788	B-6
2SD789	B-6
2SD809	B-6
2SD862	B-6
2SD882	B-6
2SD1061	B-6
2SK43	B-6
2SK107	B-6
2SK109	B-6
2SK150A	B-6
2SK162	B-6
2SK523	B-6
AA5525S	B-5
AD9685BD	B-7
AM26LS30PC	B-7
AM26LS32AC	B-7
AM26LS32PC	B-7
AM685DL	B-7
BA6993	B-43
BA9101	B-7
BX365A	B-8
BX381	B-8
BX1040	B-7
BX1156	B-8
BX3929	B-8
BX3930	B-8
BX3931	B-8
BX3931A	B-8
CA3054	B-8
CA3102E	B-8
CTG-31S	B-5
CTU-38R	B-5
CTU-38S	B-5
CX130	B-8
CX550	B-8
CX773A	B-10
CX773B	B-10
CX7903	B-9
CX7907	B-12
CX7907A	B-12
CX7912	B-14
CX7912A	B-14
CX7913	B-16
CX7913A	B-18
CX20016A-2	B-9
CX20051A	B-9
CX20060	B-8
DAC-IC8BC	B-20
DM211	B-5
DTC144ES	B-6
EQA01-08R	*
EQA02-05	*
EQA02-06	*
EQA02-07	*
EQA02-08	*
EQA02-10	*
EQB01-13	*
ERA81-004	*
ERB12-01RK	*
ERB12-02RK	*
ERB12-04RK	*
ESAD33-02CS	B-5
F114	*
FT5709M	B-20
GL3HY3	B-5
GL3PG5	B-5
GL3PR3	B-5
GL6R202	B-5
GL9D03D	B-5
GP2L01F	B-5
HA12017	B-8
HA17458GS	B-20
HA17723G	B-42
HA17741GS	B-20
HD10105	B-24
HD10116	B-24
HD10117	B-24
HD10124	B-24
HD10125	B-24
HD10131	B-24
HD14001BP	B-36
HD14011BP	B-36
HD14013BP	B-36
HD14040BP	B-37
HD14046BP	B-37
HD14051BP	B-37
HD14052BP	B-38
HD14053BP	B-38
HD14069BP	B-38
HD14069UBP	B-38
HD14503BP	B-39
HD14538BP	B-39
HD7406P	B-26
HD74HC107P	B-41
HD74HC132P	B-41
HD74LS86P	B-27
HD75107A	B-35
HD75107AP	B-35
HD75452P	B-35

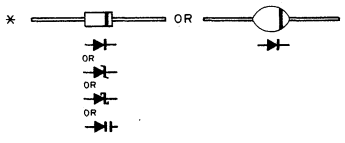

SEMICONDUCTOR INDEX

TYPE	PAGE
H11-0201	B-20
HM6116LP	B-20
HM6168HP	B-23
JC501	B-6
LD003	B-5
LH0080	B-21
LH0080A	B-21
LH0082	B-21
LH0082A	B-21
LH0084	B-22
LH0084A	B-22
LM358P	B-43
LN25RP	B-5
LN35BP	B-5
M54516P	B-22
M54517P	B-22
MB3759	B-22
MB7051	B-45
MB7052	B-46
MB7053	B-46
MB7054	B-47
MB8168	B-23
MB84001B	B-36
MB84011B	B-36
MB84013B	B-36
MB84049UB	B-37
MB84052B	B-38
MB84053B	B-38
MB84069UB	B-38
MB84081B	B-38
MB84520B	B-39
MB8747	B-23
MBM2732A	B-38
MC1496P	B-43
MC1595L	B-24
MC10105L	B-24
MC10115L	B-24
MC10116L	B-24
MC10117L	B-24
MC10124L	B-24
MC10125L	B-24
MC10131L	B-24
MC10198L	B-24
MC14001BCP	B-36
MC14008BCP	B-36
MC14011BCP	B-36
MC14013BCP	B-36
MC14015BCP	B-36
MC14043BCP	B-37
MC14046BCP	B-37
MC14049UBCP	B-37
MC14051BCP	B-37
MC14052BCP	B-38
MC14053BCP	B-38
MC14069UBCP	B-38
MC14071BCP	B-38
MC14073BCP	B-38
MC14081BCP	B-38
MC14174BCP	B-40
MC14175BCP	B-40
MC14495P	B-38
MC14503BCP	B-39
MC14507BCP	B-37
MC14512BCP	B-39
MC14520BCP	B-39
MC14526BCP	B-39
MC14528BCP	B-39
MC14538BCP	B-39
MC14555BCP	B-40
MC14557BCP	B-40
MC14584BCP	B-40
MC1496P	B-43
MC1595L	B-24
MC1596G	B-43
MC74HC107P	B-41
MC74HC132P	B-41
MSM4011RS	B-36
MSM5128	B-20
NE527H	B-25
NE527N	B-25
NJM2903D	B-25
NJM4558D	B-25
NJM4559D	B-25
NJM4560D	B-25
NJM78L05	B-25
ON1102	B-5
ON1106	B-5
P873-G35-552	B-5
PY5525S	B-5
RD3.9E *	
RD4.7E *	
RD5.1E *	
RD5.6E *	
RD6.8E *	
RD7.5E *	
RD8.2E *	
RD10E *	
RD11E *	
RD13E *	
RD15E *	
RD18E *	
RD22E *	
RD30E *	
RD39E *	
RD100E *	
S1B01-02 *	
S25VB60	B-5
SN74LS00N	B-25
SN74LS02N	B-25
SN74LS03N	B-25
SN7404N	B-25
SN74LS04N	B-25
SN74S04N	B-25
SN74LS05N	B-25
SN7406N	B-26
SN74LS08N	B-26
SN74LS10N	B-26
SN74S10N	B-26
SN74LS11N	B-26
SN74S11N	B-26
SN74LS12N	B-26
SN74LS14N	B-26
SN74LS20N	B-26
SN74LS27N	B-26
SN74LS30N	B-26
SN74LS32N	B-27
SN74LS74AN	B-27
SN74S74N	B-27
SN74LS85N	B-27
SN74LS86N	B-27
SN74LS107AN	B-27
SN74LS112AN	B-27
SN74120N	B-27
SN74123N	B-28
SN74LS123AN	B-28
SN74LS125AN	B-28
SN74LS126AN	B-28
SN74128N	B-28
SN74LS138N	B-28
SN74LS139N	B-28
SN74LS148N	B-28
SN74LS151N	B-29
SN74LS153N	B-29
SN74LS157N	B-29
SN74LS161AN	B-29
SN74LS162AN	B-29
SN74LS163AN	B-30
SN74LS164N	B-30
SN74S169N	B-30
SN74LS174N	B-30
SN74LS175N	B-30
SN74S189N	B-31
SN74LS191N	B-31
SN74LS193N	B-31
SN74LS195AN	B-32
SN74LS197N	B-32
SN74LS221N	B-32
SN74LS240N	B-32
SN74LS241N	B-32
SN74LS243N	B-32
SN74LS244N	B-32
SN74LS245N	B-33
SN74LS257N	B-33
SN74265N	B-33
SN74LS265N	B-33
SN74LS273N	B-33
SN74LS280N	B-33
SN74LS365AN	B-33
SN74LS367AN	B-34
SN74LS368AN	B-34
SN74LS373N	B-34
SN74LS374N	B-34
SN74LS375N	B-34
SN74LS390N	B-34
SN74LS393N	B-35
SN74LS624N	B-35
SN74LS669N	B-35
SN74LS670N	B-35
SN75107AN	B-35
SN75207BN	B-35
SN75452BP	B-35
TA7069P	B-41
TC4001BP	B-36
TC4008BP	B-36
TC4011BP	B-36
TC4013BP	B-36
TC4015BP	B-36
TC4028BP	B-36
TC4030BP	B-37
TC4040BP	B-37
TC4043BP	B-37
TC4046BP	B-37
TC4049BP	B-37
TC4051BP	B-37
TC4052BP	B-38
TC4053BP	B-38
TC4069UBP	B-38
TC4071BP	B-38
TC4073BP	B-38
TC4081BP	B-38
TC4512BP	B-39
TC4520BP	B-39
TC4528BP	B-39
TC4539BP	B-40
TC4555BP	B-40
TC40174BP	B-40
TC40175BP	B-40
TC40H074P	B-40
TC40H368P	B-40
TC40H390P	B-41
TC504013BP	B-41

TYPE	PAGE
TC5501P	B-41
TC5501P-1	B-41
TC74HC107P	B-41
TC74HC132P	B-41
TC74HC4538P	B-44
TD62105P	B-41
THS102	B-5
THS102A	B-5
TL072ACP	B-41
TL072CP	B-41
TL074CN	B-41
TL081CP	B-41
TL082CP	B-41
TL084CN	B-41
TL191CN	B-42
TL489CP	B-42
TL601CP	B-42
TL607CP	B-42
TL610CP	B-42
TL820CP	B-42
TLG115A	B-5
U05E	*
U05G	*
UA78L05AWV	B-43
UA723CN	B-42
UA723DC	B-42
UA796HCA	B-43
UA796HC	B-43
UPC78L05	B-43
UPC78L05A	B-43
UPC78L12	B-43
UPC91A	B-43
UPC159A	B-43
UPC311C	B-43
UPC318C	B-43
UPC319C	B-43
UPC324C	B-43
UPC339C	B-43
UPC358C	B-43
UPC393C	B-43
UPC648D	B-44
UPC649C	B-44
UPC4082C	B-41
UPC4556C	B-44
UPC4557C	B-44
UPC4558C	B-25
UPD780C	B-21

TYPE	PAGE
UPD4001BC	B-36
UPD4011BC	B-36
UPD4013BC	B-36
UPD4015BC	B-36
UPD4028BC	B-36
UPD4030BC	B-37
UPD4040C	B-37
UPD4049C	B-37
UPD4051BC	B-37
UPD4053BC	B-38
UPD4069UBC	B-38
UPD4071BC	B-38
UPD4073BC	B-38
UPD4081BC	B-38
UPD4584BC	B-40
UPD5501LC-1	B-41
UPD8253C-5	B-45
US1035	*
V06C	*
V09C	*
V09G	*

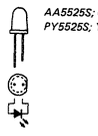
AA5525S; ORANGE
PY5525S; YELLOW

TLG115A; GREEN

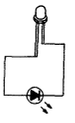
GL-3HY3; YELLOW
GL-3PG5; GREEN
GL-3PR3; RED

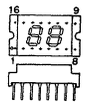
GL-6R202; RED

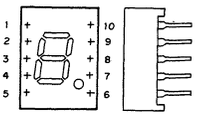
GL-9D03D ; RED

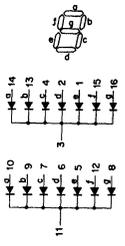

LN25RP; RED
LN35BP; GREEN

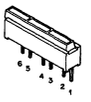
LD003

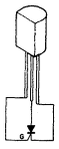
03P05M
SG-629

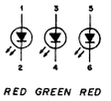
RED GREEN RED

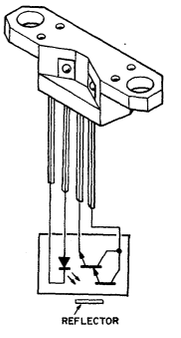
GP-2L01F
REFLECTOR

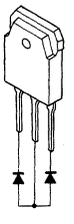
CTU-38R

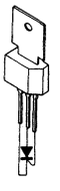
2P5M

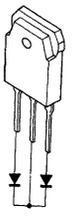
ESAD33-02CS
CTG-31S
CTU-38S

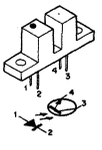
ON1102
ON1102-SF
ON1102S.SO
ON1106
ON1106.SO

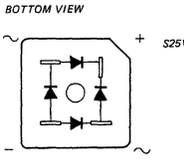
BOTTOM VIEW
S25VB□□

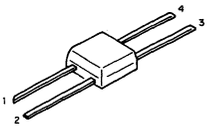
THS102
THS102A
Hall Element
— Equivalent Circuit —

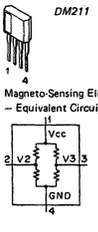
DM211
Magneto-Sensing Element
— Equivalent Circuit —

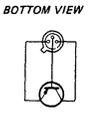
BOTTOM VIEW
2SA530H

2SA678
2SA1026
2SA1027R

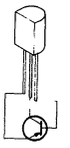
2SA684
2SA772
2SA773
2SA966
2SA1013
2SB739
2SB740

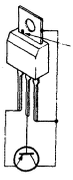
2SA706
EMITTER MARK

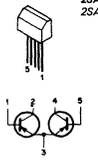
2SA798
2SA979

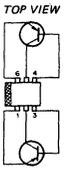
TOP VIEW
2SA884

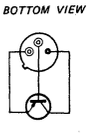
BOTTOM VIEW
2SA911

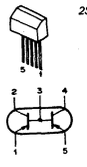
2SA995

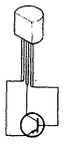
2SA1005
2SA1015
2SA733
2SA844
2SA872
2SA872A
2SA925
2SA952

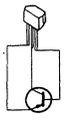
2SA1048
2SA1115

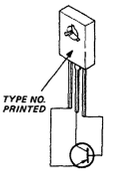
2SA1120
2SA1156
2SA1220A
2SA715
2SB548
2SB772
TYPE NO. PRINTED

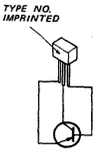
TYPE NO. IMPRINTED
2SA1175

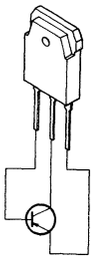
2SA1186

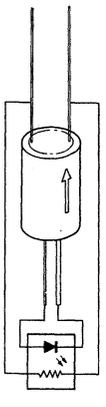
P873-G35-552

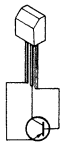

2SB733
2SB734

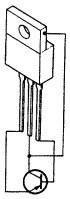

2SB825

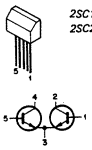

2SC1583
2SC2259

BOTTOM VIEW

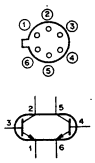

2SC1733

2SC403C
2SC634A
2SC1636

BOTTOM VIEW

2SC689H

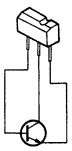

2SC2021

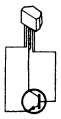

2SC2458
2SC2603
2SC2724
2SC403SP

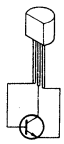

2SC710
2SC1908
2SC2012

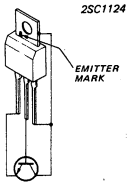

2SC1124

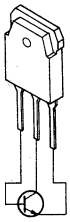

2SC2555
2SC2837
2SC2944

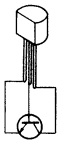

2SC2593
2SC2901

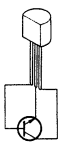

2SC1126
2SC2009
2SC2011

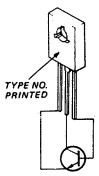

2SC1162
2SC2690A
2SC2752
2SD414
2SD809
2SD862
2SD882

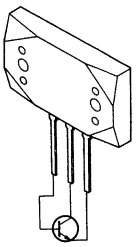

2SC2773

TYPE NO.
IMPRINTED

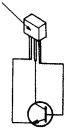

2SC2785

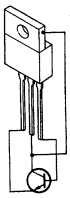

2SC1173
2SC1986
2SC2315
2SC2654
2SC3559
2SD313HP
2SD1061

BOTTOM VIEW

2N2369
2SC1252
2SC1762

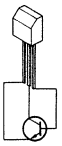

2SD773
2SD774

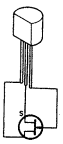

2SK43
2SK523

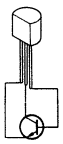

2SC1363
2SC1364
2SC1633
2SC1634
2SC1775
2SC1775A
2SC1815
2SC1890A
2SC2551
2SC2878
2SC3068
2SC641K
2SC945
JC501

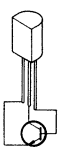

2SC1474
2SC1475
2SC2001
2SC2236
2SC2383
2SD788
2SD789

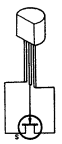

2SK107

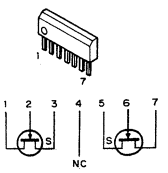

2SK109

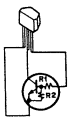

DTC144ES (R1=47K, R2=47K)

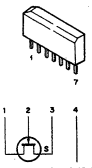

2SK150A

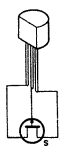

2SK162

AD9685BD (ANALOG DEVICES)
AM685DL (ADVANCED MICRO DEVICES)
VOLTAGE COMPARATOR
(OPEN EMITTER OUTPUTS)
— TOP VIEW —

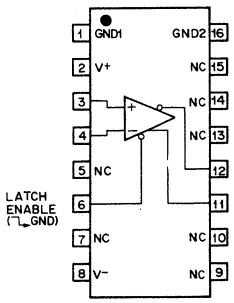

AM26LS30PC (ADVANCED MICRO DEVICE)
LINE DRIVER
- TOP VIEW -

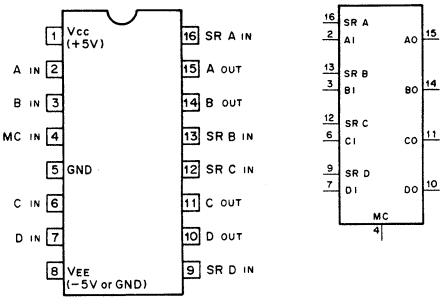

MC ; MODE CONTROL
SR ; SLEW RATE CONTROL

MC=1

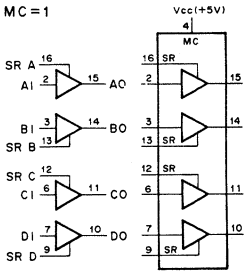

INPUTS		OUTPUTS
MC	A TO D	A TO D
1	0	0
1	1	1

MC=0

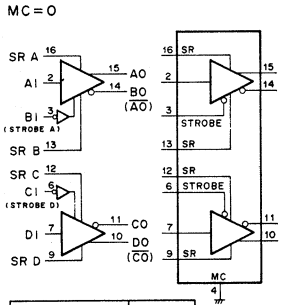

INPUTS			OUTPUTS	
MC	STROBE	A & D	A & D	B & C
0	0	0	0	1
0	0	1	1	0
0	1	X	HI-Z	HI-Z

0 ; LOW LEVEL
1 : HIGH LEVEL
X ; DONT CARE
HI-Z ; HIGH IMPEDANCE

AM26LS32AC (TI)
AM26LS32PC (ADVANCED MICRO DEVICE)
HIGH SPEED DIFFERENTIAL LINE RECEIVER
— TOP VIEW —

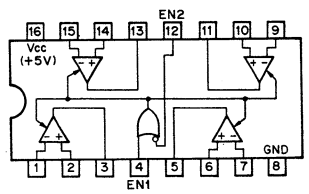

FUNCTION TABLE

EN2	EN1	OUTPUT
0	0	ENABLE
0	1	ENABLE
1	0	HI-Z
1	1	ENABLE

0 ; LOW LEVEL
1 ; HIGH LEVEL
HI-Z ; HIGH IMPEDANCE

	SENSE	INPUT VOLT
LS32	±200mV	± 7V
LS33	±500mV	±15V

BA9101 (ROHM)
8-BIT A/D CONVERTER WITH 3-STATE OUTPUT CONTROL
— TOP VIEW —

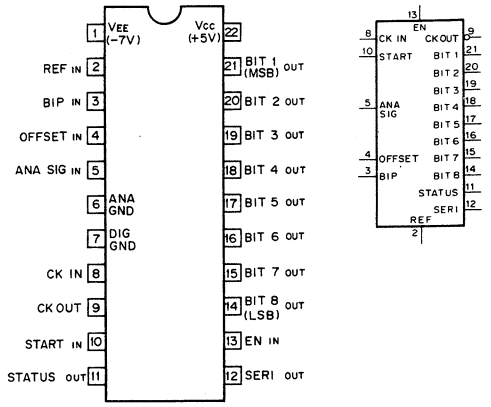

REF ;REFERENCE VOLTAGE ADJUST
BIP ;BIPOLAR OFFSET IN
CK IN ;EXTERNAL CLOCK or CEXT IN
CKOUT;INVERTED CLOCK OUT
START ; CONVERSION START PULSE IN
STATUS ; STATUS FLAG OUT
SERI ; SERIAL OUT
EN ; OUTPUT ENABLE

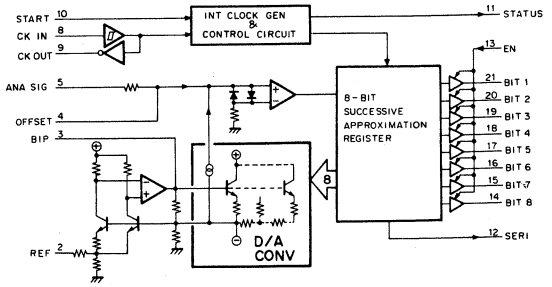

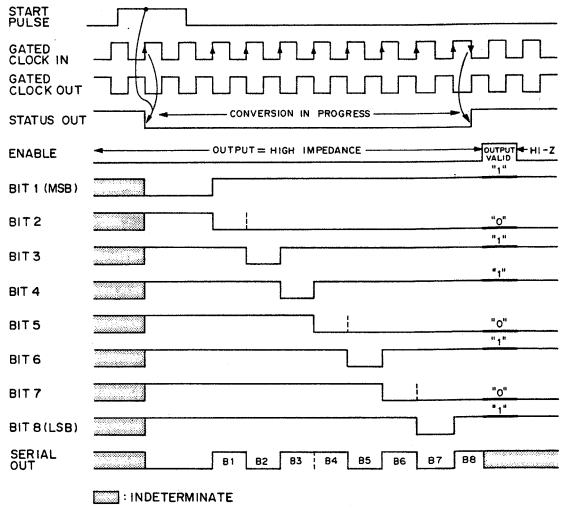

TIMING DIAGRAM (Binary Code 10110101)

BX1040 (SONY)
SYNC SEPARATOR
— REAR VIEW —

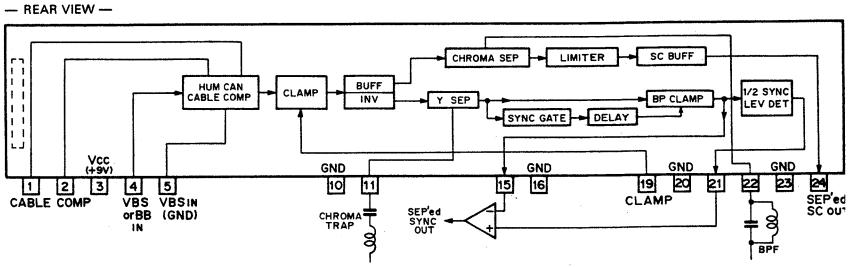

BX365A (SONY)
A7015
VIDEO AMPLIFIER
— SIDE VIEW —

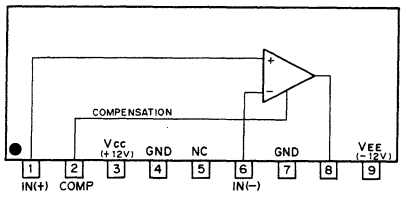

BX3931 (SONY)
BX3931A (SONY)
HYBRID VIDEO WIDEBAND BUFFER AMPLIFIER
—IMPRINTED SIDE—

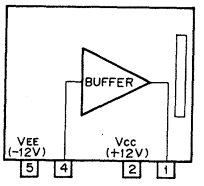

BX381 (SONY)
PHASE COMPARATOR
- SIDE VIEW-

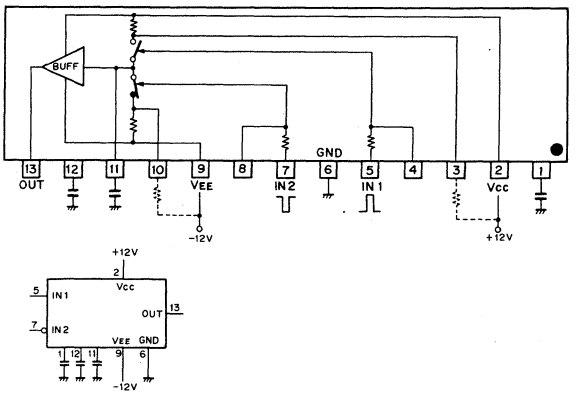

CA3054 (RCA)
DIFFERENTIAL AMPLIFIER
—TOP VIEW—

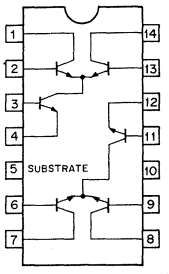

CA3102E(RCA)
HIGH FREQ.DIFFERENTIAL AMPLIFIER
—TOP VIEW—

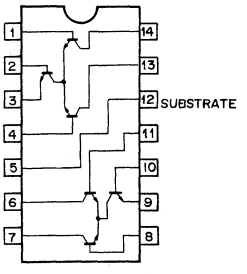

BX1156 (SONY)
BX3929 (SONY)
HYBRID VIDEO RF PREAMPLIFIER
—IMPRINTED SIDE—

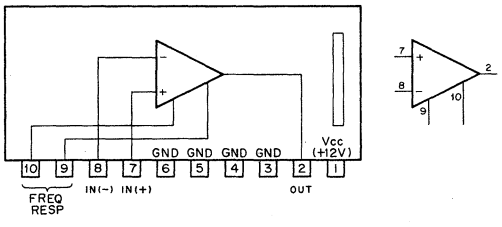

CX130 (SONY)
CX20060 (SONY)
ANALOG SWITCH
— TOP VIEW —

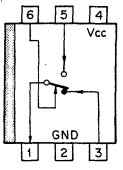

CONT. INPUT (PIN6)	SW
LOW OR OPEN	
HIGH	

BX3930 (SONY)
HYBRID VIDEO WIDEBAND DIFFERENTIAL AMPLIFIER
— IMPRINTED SIDE —

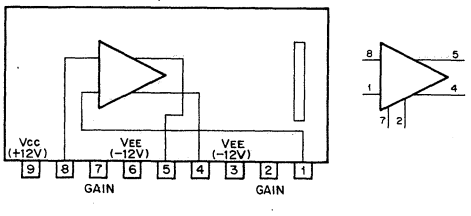

CX550 (SONY)
HA12017 (HITACHI)
AUDIO PREAMPLIFIER
— SIDE VIEW —

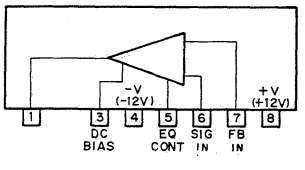

CX20016 (SONY)
CX20016A (SONY)
CX20016A-2 (SONY)
TDC1007J (TRW)
BIPOLAR/TTL 8-BIT VIDEO A/D CONVERTER
— TOP VIEW —

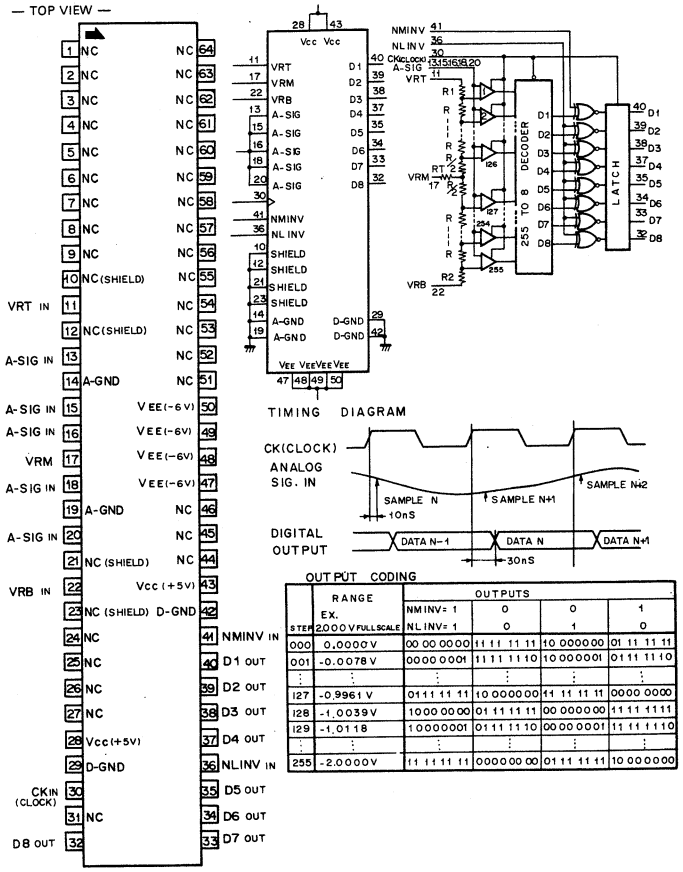

TIMING DIAGRAM

OUTPUT CODING

STEP	RANGE EX. 2.000V FULLSCALE		OUTPUTS NMINV= 1 NLINV= 1	0 0	0 1	1 0
000	0.0000V		00 00 00 00	11 11 11 11	10 00 00 00	01 11 11 11
001	-0.0078V		00 00 00 01	11 11 11 10	10 00 00 01	01 11 11 10
⋮	⋮		⋮	⋮	⋮	⋮
127	-0.9961V		01 11 11 11	10 00 00 00	11 11 11 11	00 00 00 00
128	-1.0039V		10 00 00 00	01 11 11 11	00 00 00 00	11 11 11 11
129	-1.0118		10 00 00 01	01 11 11 10	00 00 00 01	11 11 11 10
⋮	⋮		⋮	⋮	⋮	⋮
255	-2.0000V		11 11 11 11	00 00 00 00	01 11 11 11	10 00 00 00

CX7903 (SONY)
C-MOS GENLOCK DRIVER FOR CX773A
— TOP VIEW —

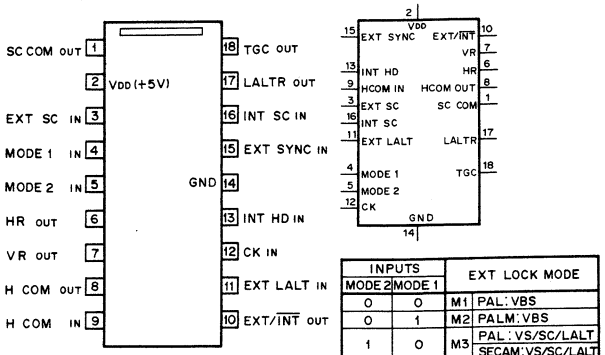

INPUTS MODE 2	INPUTS MODE 1		EXT LOCK MODE
0	0	M1	PAL: VBS
0	1	M2	PALM: VBS
1	0	M3	PAL: VS/SC/LALT
			SECAM: VS/SC/LALT
1	1	M4	NTSC: VBS
			NTSC: VS/SC
			PALM: VS/SC/LALT

0 ; LOW LEVEL
1 ; HIGH LEVEL

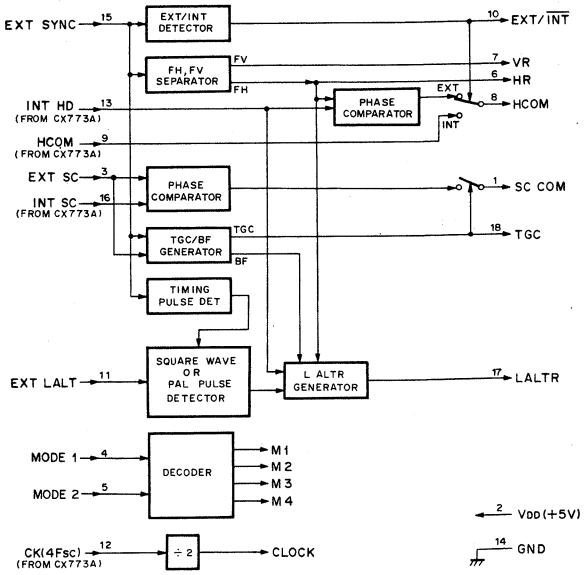

CX20051 (SONY)
CX20051A (SONY)
10-BIT D/A CONVERTER (ECL INPUT)
— TOP VIEW —

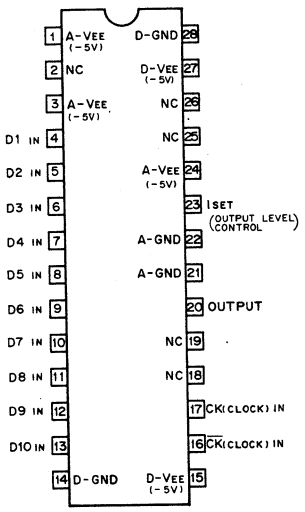

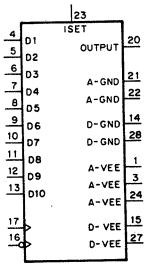

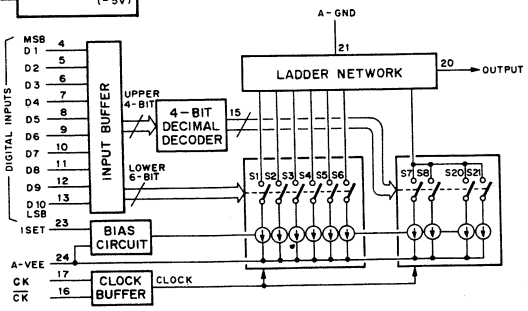

CX773A (SONY)
CX773A-1 (SONY)
CX773B (SONY)
C-MOS SYNC GENERATOR (NTSC, PAL-M, PAL, SECAM)
— TOP VIEW —

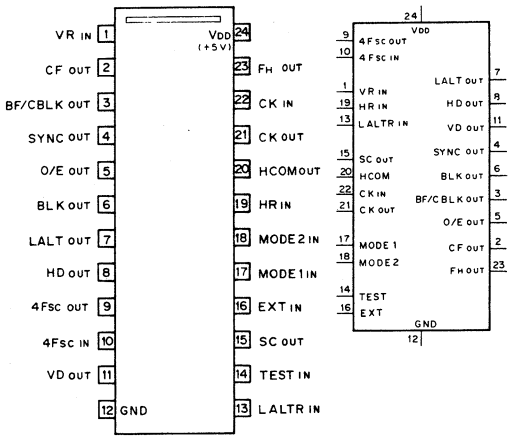

O/E : ODD/EVEN FIELD
CF : COLOR FRAME PULSE
HCOM : H COMPARATOR

SYSTEM	4Fsc	CLOCK
NTSC	910 FH	910FH
PAL	1135FH+2Fv	908FH
PALM	909FH	910FH
SECAM	———	908FH

INPUTS		SYSTEM
MODE 1	MODE 2	
0	0	NTSC
0	1	SECAM
1	0	PALM
1	1	PAL

0 ; LOW LEVEL (GND)
1 ; HIGH LEVEL (VDD)

INPUTS		FUNCTION
EXT	TEST	
0	0	INTERNAL
0	1	INVALID
1	0	EXT
1	1	TEST

TEST "0": OPEN (INTERNALLY PULLED DOWN)

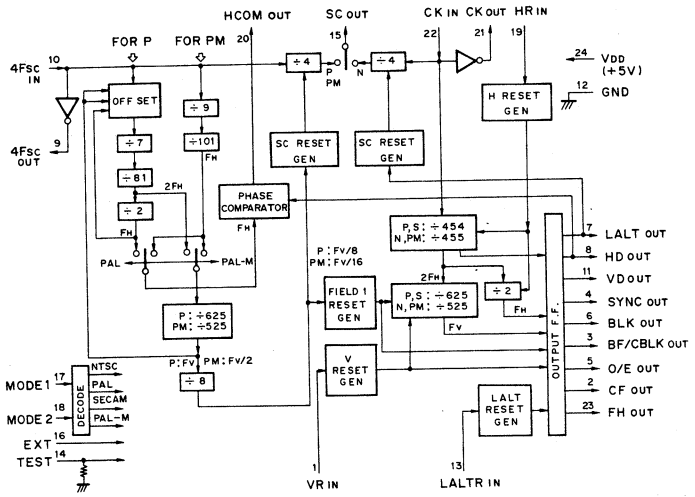

P:PAL, SECAM
N:NTSC, PALM

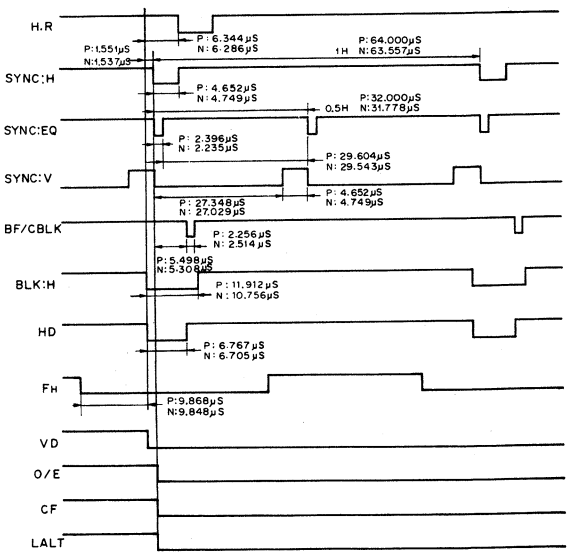

NTSC, PAL-M (FIELD 1,3)

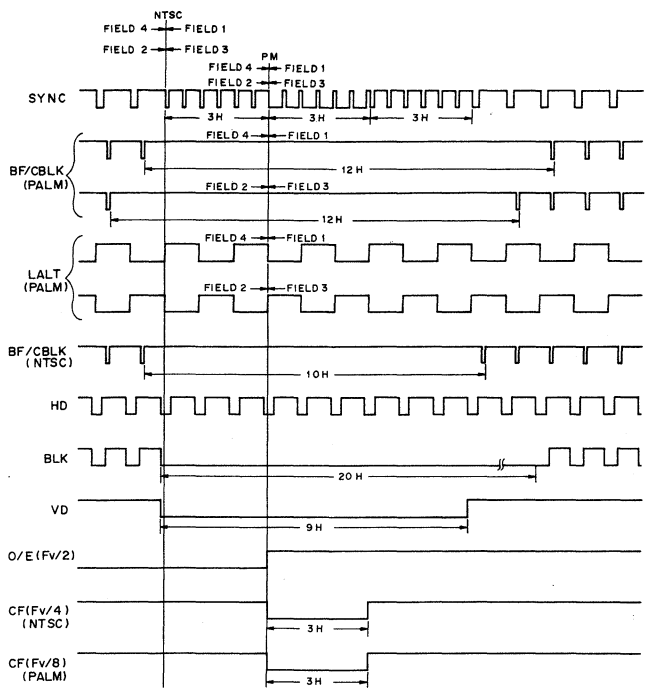

NTSC, PAL-M (FIELD 2,4)

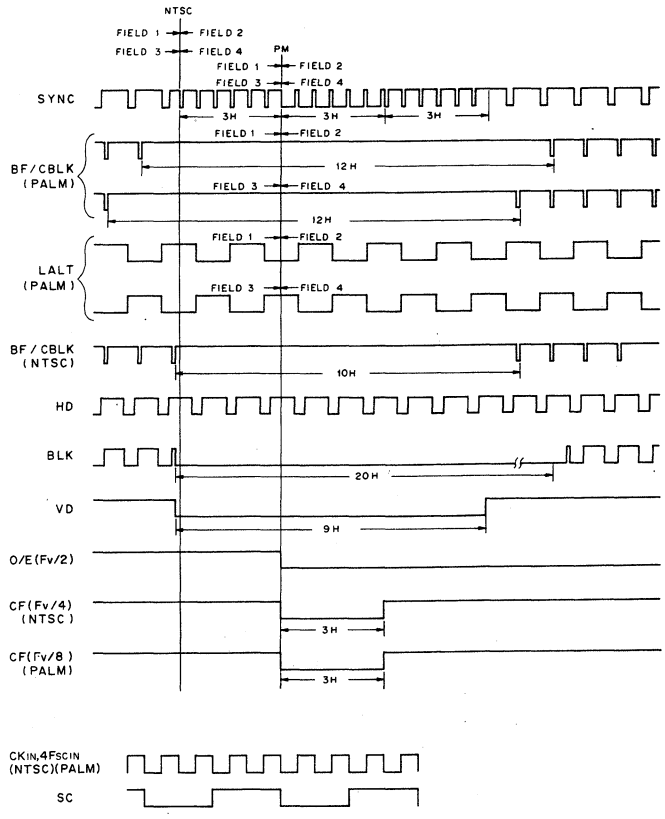

PAL, SECAM (FIELD1,3)

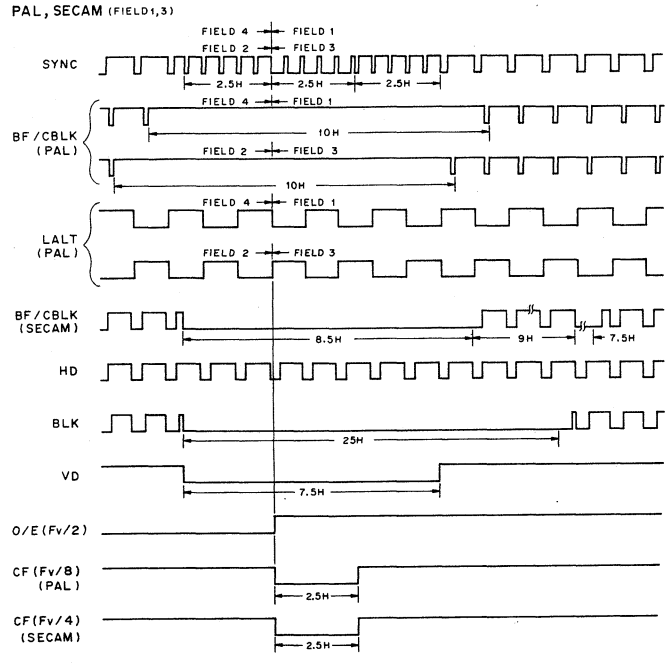

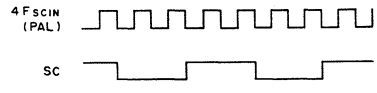

PAL, SECAM (FIELD 4,2)

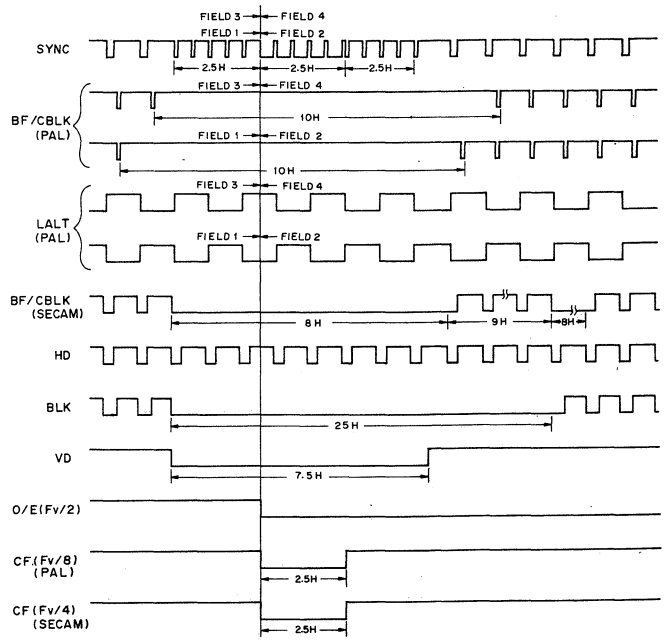

CX7907 (SONY)
CX7907A (SONY)
C-MOS TIME CODE GENERATOR
— TOP VIEW —

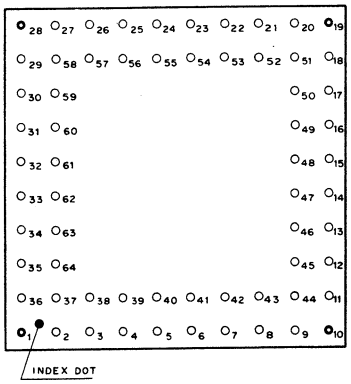

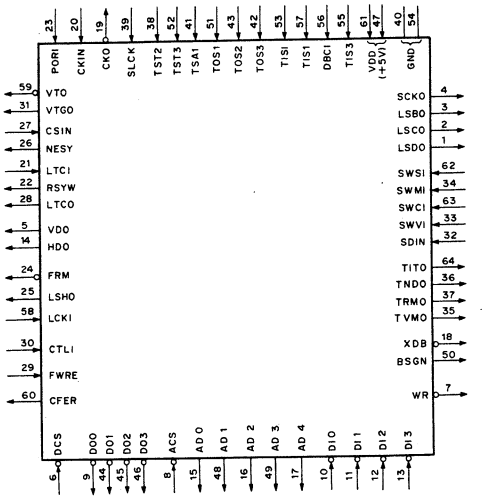

PIN ASSIGNMENT

Pin No.	IN	OUT	SYMBOL
1		o	LSDO
2		o	LSCO
3		o	LSBO
4		o	SCKO
5		o	VDO
6	o		DCS
7		o	WR
8	o		ACS
9		o	DO0
10	o		DI0
11	o		DI1
12	o		DI2
13	o		DI3
14		o	HDO
15		o	AD0
16		o	AD2

Pin No.	IN	OUT	SYMBOL
17		o	AD4
18		o	XDB
19		o	CKO
20	o		CKIN
21	o		LTCI
22		o	RSYW
23	o		PORI
24		o	FRM
25		o	LSHO
26		o	NESY
27	o		CSIN
28		o	LTCO
29	o		FWRE
30	o		CTLI
31		o	VTGO
32	o		SDIN

Pin No.	IN	OUT	SYMBOL
33	o		SWVI
34	o		SWMI
35		o	TVMO
36		o	TNDO
37		o	TRMO
38	o		TST2
39	o		SLCK
40		o	GND
41	o		TSAI
42	o		TOS3
43	o		TOS2
44		o	DO1
45		o	DO2
46		o	DO3
47	o		VDD(+5V)
48		o	AD1

Pin No.	IN	OUT	SYMBOL
49		o	AD3
50		o	BSGN
51	o		TOS1
52	o		TST3
53	o		TISI
54		o	GND
55	o		TIS3
56	o		DBCI
57	o		TIS1
58	o		LCKI
59		o	VTO
60		o	CFER
61	o		VDD(+5V)
62	o		SWSI
63	o		SWCI
64		o	TITO

BLOCK DIAGRAM

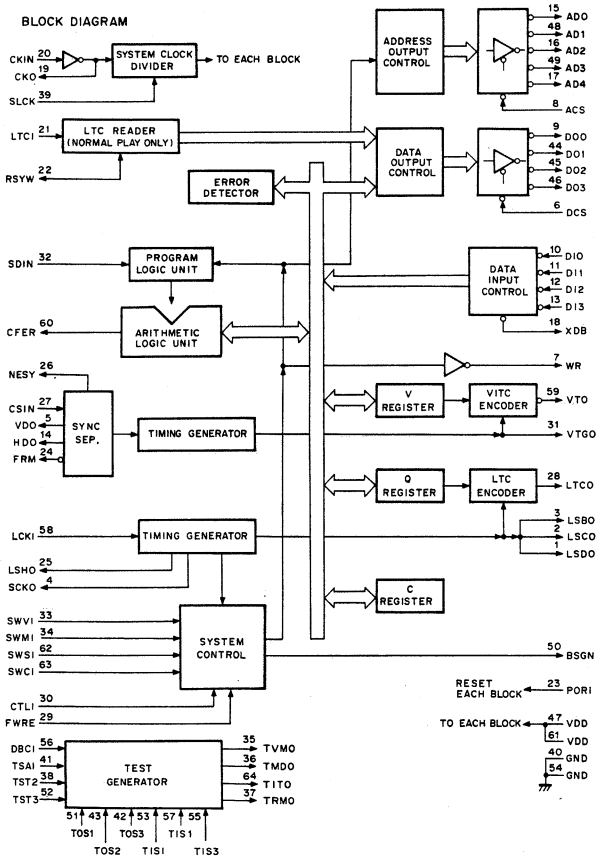

FUNCTIONAL PIN DEFINITION

Pin No.	SYMBOL	DESCRIPTION
8	ACS	ADDRESS LINE CHIP SELECT INPUT
15	AD0	ADDRESS DATA OUTPUT
48	AD1	
16	AD2	
49	AD3	
17	AD4	
50	BSGN	BUSY GENERATOR OUTPUT
60	CFER	COLOR FRAME ERROR FLAG OUTPUT
20	CKIN	SYSTEM CLOCK INPUT
19	CKO	CLOCK OUTPUT
27	CSIN	COMPOSITE SYNC INPUT
30	CTLI	CTL(TIMER) SIGNAL INPUT ($\overline{\uparrow}$)
6	DCS	DATA LINE CHIP SELECT INPUT (NEGATIVE-LOGIC)
10	DI0	DATA BUS INPUT (NEGATIVE-LOGIC)
11	DI1	
12	DI2	
13	DI3	
9	DO0	DATA BUS OUTPUT (NEGATIVE-LOGIC)
44	DO1	
45	DO2	
46	DO3	
24	FRM	FRAME SIGNAL OUTPUT (NEGATIVE-LOGIC)
29	FWRE	CTL DIRECTION INPUT
14	HDO	HORIZONTAL SYNC DRIVE OUTPUT
58	LCKI	LTC CLOCK INPUT (SMPTE 9.6kHz/EBU 8kHz)
3	LSBO	LTC SYNCHRONOUS SIGNAL B OUTPUT
2	LSCO	LTC SYNCHRONOUS SIGNAL C OUTPUT
1	LSDO	LTC SYNCHRONOUS SIGNAL D OUTPUT
25	LSHO	LTC SYNCHRONOUS SIGNAL H OUTPUT
21	LTCI	LTC INPUT
28	LTCO	LTC SIGNAL OUTPUT
26	NESY	LOST-SYNC FLAG OUTPUT
23	PORI	POWER ON RESET INPUT
22	RSYW	READ SYNC WORD OUTPUT
4	SCKO	SWITCHES SIGNAL IN CLOCK OUTPUT
32	SDIN	SERIAL DATA INPUT
39	SLCK	SELECT CLOCK INPUT
63	SWCI	SWITCHES SIGNAL C INPUT
34	SWMI	SWITCHES SIGNAL M INPUT
62	SWSI	SWITCHES SIGNAL S INPUT
33	SWVI	SWITCHES SIGNAL V INPUT
5	VDO	VERTICAL SYNC DRIVE OUTPUT
31	VTGO	VITC GATE SIGNAL OUTPUT
59	VTO	VITC SIGNAL OUTPUT (NEGATIVE-LOGIC)
7	WR	WRITE SIGNAL OUTPUT (NEGATIVE-LOGIC)
18	XDB	EXTERNAL DATA BUS IN FLAG OUTPUT (NEGATIVE-LOGIC)
47	VDD	POWER LINE (+5V)
61	VDD	
40	GND	GND LINE
54	GND	
56	DBCI	TEST INPUT (TO BE CONNECTED WITH GND)
57	TIS1	
55	TIS3	
53	TISI	
51	TOS1	
43	TOS2	
42	TOS3	
41	TSAI	
38	TST2	
52	TST3	
64	TITO	TEST OUTPUT (TO BE LEFT OPEN)
36	TNDO	
37	TRMO	
35	TVMO	

#32 SDIN

LSDO	LSCO	LSBO	SDIN	FUNCTION
0	0	0	┐	INCREASE IN BIT 'FR or U1'
0	0	1		INCREASE IN BIT 'FT or U2'
0	1	0		INCREASE IN BIT 'SE or U3'
0	1	1		INCREASE IN BIT 'ST or U4'
1	0	0		INCREASE IN BIT 'MN or U5'
1	0	1		INCREASE IN BIT 'MT or U6'
1	1	0		INCREASE IN BIT 'HR or U7'
1	1	1	┘	INCREASE IN BIT 'HT or U8'

NOTE;INFLUENCED BIT IS DECIDED BY FIRST 2 BITS OF SWCI.

#33 SWVI

LSDO	LSCO	LSBO	SWVI	FUNCTION
0	0	0	SW1A†	VITC POSITION SELECT A
0	0	1	SW1B†	
0	1	0	SW1C†	
0	1	1	SW1D†	
1	0	0	SW2A†	VITC POSITION SELECT B
1	0	1	SW2B†	
1	1	0	SW2C†	
1	1	1	SW2D†	

†;VITC POSITION SELECT

SW1D SW2D	SW1C SW2C	SW1B SW2B	SW1A SW2A	INSERTION LINE NTSC	INSERTION LINE PAL,SECAM
0	0	0	0	LINE 25	LINE 22,335
0	0	0	1	24	21,334
0	0	1	0	23	20,333
0	0	1	1	22	19,332
0	1	0	0	21	18,331
0	1	0	1	20	17,330
0	1	1	0	19	16,329
0	1	1	1	18	15,328
1	0	0	0	17	14,327
1	0	0	1	16	13,326
1	0	1	0	15	12,325
1	0	1	1	14	11,324
1	1	0	0	13	10,323
1	1	0	1	12	9,322
1	1	1	0	11	8,321
1	1	1	1	10	7,320

#34 SWMI

LSDO	LSCO	LSBO	SWMI	FUNCTION
0	0	0	x	INSERT SWMI DATA INTO BIT 'AS1'(NEGATIVE-LOGIC)
0	0	1	x	INSERT SWMI DATA INTO BIT 'AS2'(NEGATIVE-LOGIC)
0	1	0	x	INSERT SWMI DATA INTO BIT 'AS3'(NEGATIVE-LOGIC)
0	1	1	x	INSERT SWMI DATA INTO BIT 'AS4'(NEGATIVE-LOGIC)
1	0	0	x	INSERT SWMI DATA INTO BIT 'AS5'(NEGATIVE-LOGIC)
1	0	1	x	INSERT SWMI DATA INTO BIT 'AS6'(NEGATIVE-LOGIC)
1	1	0	ƒ	COLOR FRAME LOCK IN FIELD 1
1	1	1	0	COLOR FRAME OFF
1	1	1	1	COLOR FRAME ON

X;DON'T CARE.

#62 SWSI

LSDO	LSCO	LSBO	SWSI	FUNCTION
0	0	0	FBS1*	VITC FIELD MARK/ LTC PHASE CORRECTION POSITION SELECT
0	0	1	FBS2*	
0	1	0	FBS3*	
0	1	1	0	PHASE CORRECTION ON
0	1	1	1	PHASE CORRECTION OFF
1	0	0	S1**	SIGNAL FORMAT SELECT
1	0	1	S2**	
1	1	0	S4**	
1	1	1	x	-

x;DON'T CARE.

*;VITC FIELD MARK/LTC PHASE CORRECTION POSITION SELECT

FBS3	FBS2	FBS1	FIELD MARK POSITION	LTC BIT No.
0	0	0	AS1	10
0	0	1	AS2	11
0	1	0	AS3	27
0	1	1	AS4	43
1	0	0	AS5	58
1	0	1	AS6	59
1	1	0	-	-
1	1	1	-	-

NOTE;LTC PHASE CORRECTION BIT OF CX7907 IS FIXED ON BIT-63.

**;SIGNAL FORMAT SELECT

S4	S2	S1	FORMAT	FRAME
0	0	0	FILM	24
0	0	1	NOT ALLOWED	-
0	1	x		
1	0	0	PAL,SECAM	25
1	0	1	NOT ALLOWED	-
1	1	0	NTSC NDF	30
1	1	1	NTSC DF	30

DF;DROP FRAME
NDF;NON DROP FRAME
x;DON'T CARE.

0;LOW LEVEL
1;HIGH LEVEL

#63 SWCI

LSDO	LSCO	LSBO	SWCI	FUNCTION	
0	0	0	0	U-BIT	IN/OUT DATA SELECT*1
0	0	0	1	TIME	
0	0	1	0	CTL	
0	0	1	1	TIME/U-BIT	
0	1	0	x	-	
0	1	1	0	DATA RESET ON*2	
0	1	1	1	DATA RESET OFF	
1	0	0	0	TIME DATA HOLD	
1	0	0	1	TIME DATA RUN	
1	0	1	┐	EXTERNAL DATA LOAD*2	
1	1	0	0	EXTRAPOLATION ON	
1	1	0	1	EXTRAPOLATION OFF	
1	1	1	x	-	

x; DON'T CARE.
*1;REFER TO TIMING CHART(DATA OUT).
*2;INFLUENCED DATA IS DECIDED BY FIRST 2 BITS OF SWCI.

ERROR BYPASS ALGORITHM

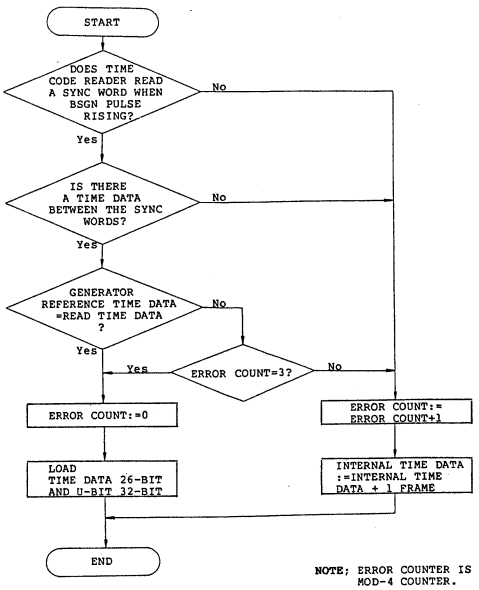

NOTE; ERROR COUNTER IS MOD-4 COUNTER.

TIMING CHART

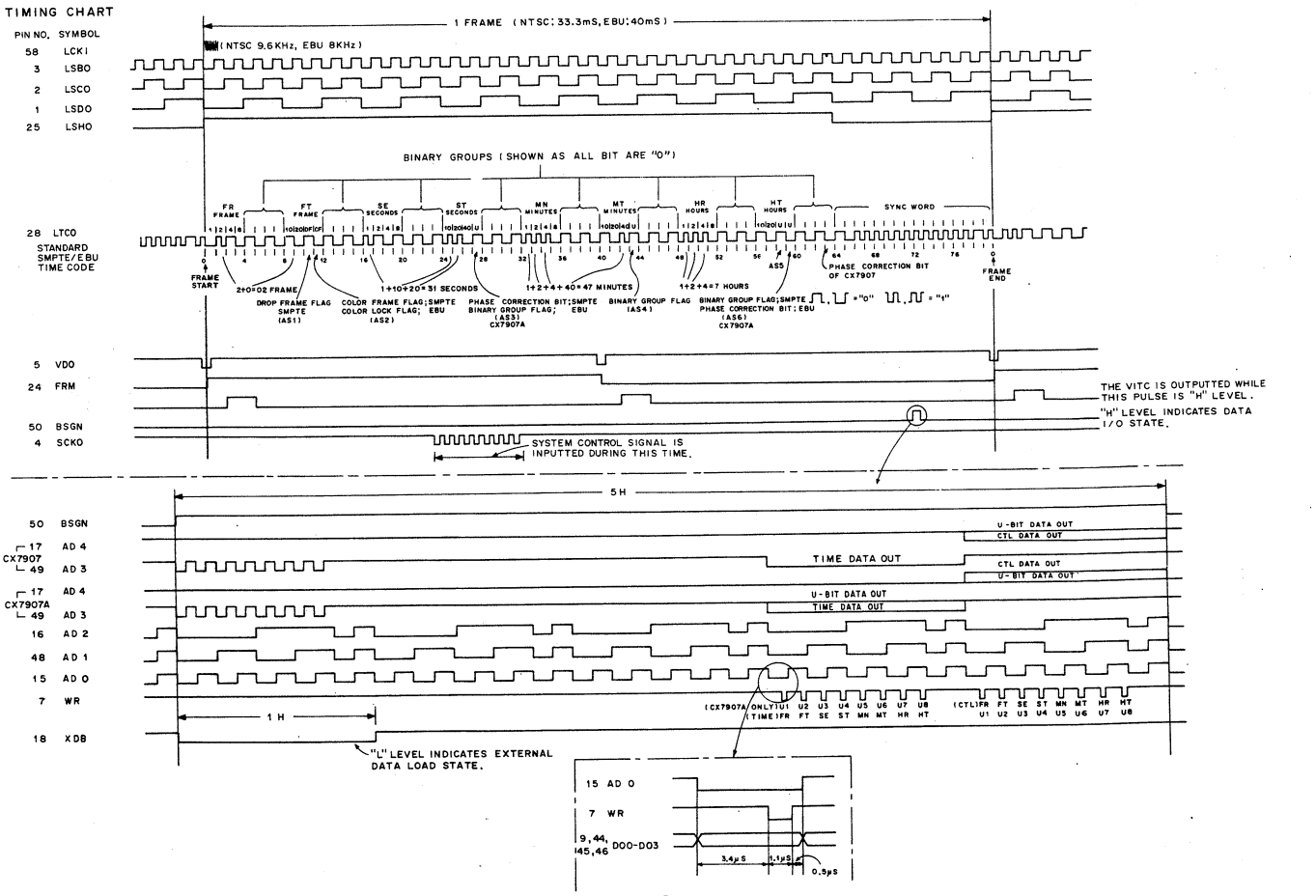

CX7912 (SONY)
CX7912A (SONY)
C-MOS TIME CODE READER
— TOP VIEW —

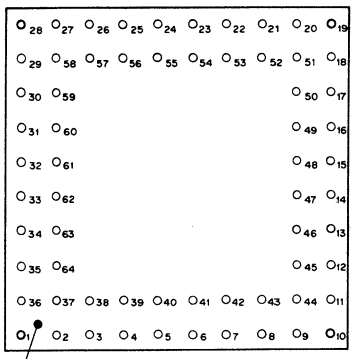

PIN ASSIGNMENT

PIN NO.	IN	OUT	SYMBOL	PIN NO.	IN	OUT	SYMBOL	PIN NO.	IN	OUT	SYMBOL	PIN NO.	IN	OUT	SYMBOL
1	O		S1	17		O	AD 4	33	O		SLCT	49		O	AD 3
2	O		RSTI	18		O	RDSY	34	O		OUDS	50		O	BSRL
3		O	DER	19		O	CK O	35	O		S4	51		O	TCT
4		O	BER	20	O		CK IN	36	O		S2	52	O		SCKI
5		O	FWRE	21		O	SCKO	37	O		TSG 1	53		O	TMO
6	O		DCS	22	O		DMSS	38	O		TSG 2	54		O	GND
7		O	WR	23	O		PN	39	O		TSG 3	55	O		XPN
8	O		ACS	24		O	PND	40		O	GND	56		O	AS6
9		O	DO O	25		O	AS5	41		O	H4O	57		O	AS4
10		O	CFS A	26		O	AS3	42		O	H8O	58		O	AS2
11		O	CFS B	27		O	AS1	43		O	H16O	59		O	DCLK
12		O	CFS C	28		O	DATA	44		O	DO1	60		O	CAL
13		O	CFS D	29	O		FRE	45		O	DO2	61	O		Vpd(+5V)
14		O	FLD	30	O		CTL I	46		O	DO3	62	O		SLTC
15		O	AD O	31	O		TC IN	47	O		Vpd(+5V)	63	O		TPN
16		O	AD 2	32		O	OVF	48		O	AD 1	64	O		TEST

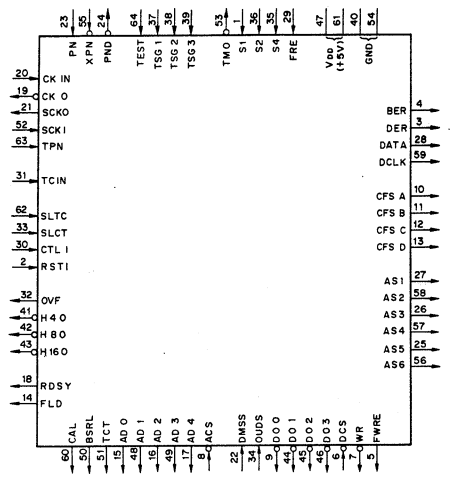

MODE SELECT

SLCT	SLTC	MODE
0	0	AUTO
0	1	TIME CODE
1	0	CTL
1	1	AUTO

CTL COUNT

FRE	RSTI	COUNT
0	X	DOWN COUNT
1	"X"	UP COUNT
X	"L"	RESET

SIGNAL FORMAT SELECT

S4	S2	S1	FORMAT	FRAME
0	0	0	FILM	24
0	0	1	NOT ALLOWED	—
0	1	0		
0	1	1		
1	0	0	PAL, SECAM	25
1	0	1	NOT ALLOWED	—
1	1	0	NTSC (NON DROP FRAME)	30
1	1	1	NTSC (DROP FRAME)	30

O : LOW LEVEL
1 : HIGH LEVEL
X : DON'T CARE

TIMING CHART

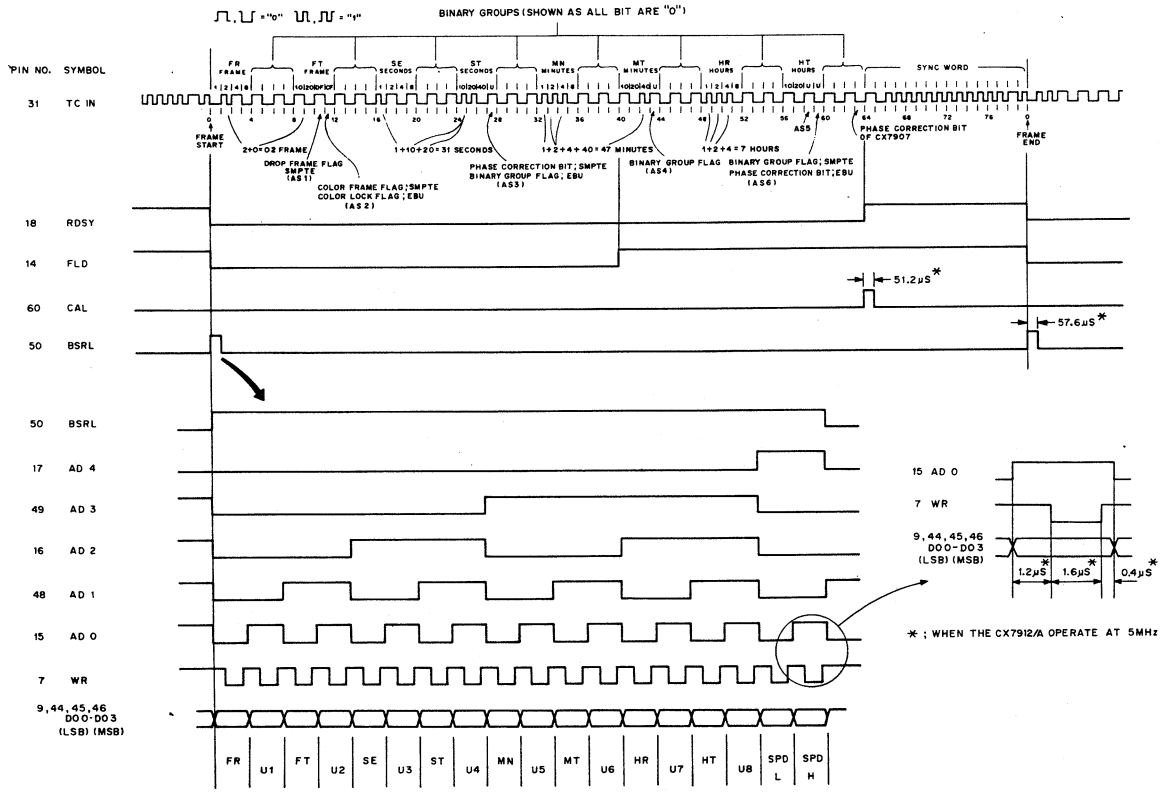

BLOCK DIAGRAM

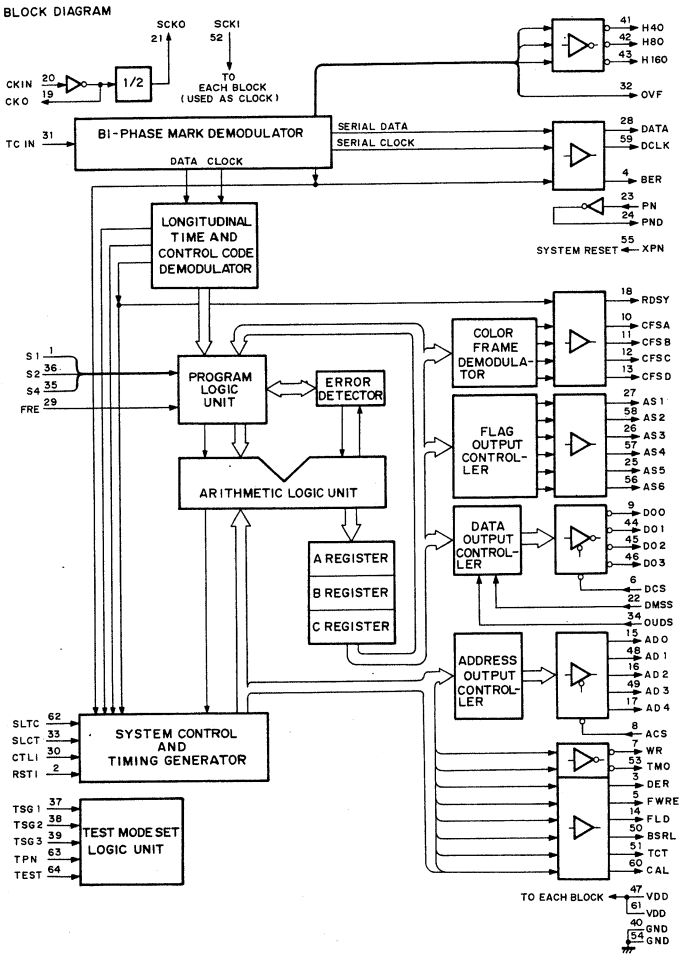

FUNCTIONAL PIN DEFINITION

Pin No.	SYMBOL	DESCRIPTION
8	ACS	ADDRESS LINE OUTPUT ENABLE (NEGATIVE-LOGIC)
15	AD0	ADDRESS DATA OUTPUT
48	AD1	
16	AD2	
49	AD3	
17	AD4	
27	AS1	PARALLEL DATA OUTPUT
58	AS2	
26	AS3	
57	AS4	
25	AS5	
56	AS6	
4	BER	BI-PHASE MARK ERROR (BIT ERROR) OUTPUT
50	BSRL	DATA OUT FLAG OUTPUT
60	CAL	CALCULATE OUT FLAG OUTPUT
10	CFSA	DEMODULATED COLOR FRAME OUTPUT
11	CFSB	
12	CFSC	
13	CFSD	
20	CKIN	CLOCK INPUT
19	CKO	CLOCK OUTPUT (NEGATIVE-LOGIC)
30	CTLI	CTL SIGNAL INPUT ($\overline{L}$)
28	DATA	DEMODULATED SERIAL DATA OUTPUT
59	DCLK	DEMODULATED CLOCK OUTPUT
6	DCS	DATA LINE OUTPUT ENABLE (NEGATIVE-LOGIC)
3	DER	DEMODULATE DATA ERROR OUTPUT
22	DMSS	ASSIGNED DATA SELECT
9	DO0	DATA OUTPUT (NEGATIVE-LOGIC)
44	DO1	
45	DO2	
46	DO3	
14	FLD	FIELD DATA OUTPUT
29	FRE	CTL DIRECTION SIGNAL INPUT
5	FWRE	DEMODULATE DIRECTION SIGNAL OUTPUT
41	H40	SPEED RANGE FLAG 4 OUTPUT (NEGATIVE-LOGIC)
42	H80	SPEED RANGE FLAG 8 OUTPUT (NEGATIVE-LOGIC)
43	H160	SPEED RANGE FLAG 16 OUTPUT (NEGATIVE-LOGIC)
34	OUDS	ERROR BYPASS ON/OFF SELECT
32	OVF	OVERFLOW FLAG OUTPUT
23	PN	POWER ON SIGNAL INPUT
24	PND	POWER ON SIGNAL OUPUT (NEGATIVE-LOGIC)
18	RDSY	READ SYNC WORD DATA OUTPUT
2	RSTI	CTL TIMER RESET INPUT ($\overline{L}$)
1	S1	SIGNAL FORMAT SELECT S1
36	S2	SIGNAL FORMAT SELECT S2
35	S4	SIGNAL FORMAT SELECT S4
52	SCKI	SYSTEM CLOCK INPUT
21	SCKO	SYSTEM CLOCK OUTPUT
33	SLCT	SELECT CTL INPUT
62	SLTC	SELECT LTC INPUT
55	XPN	SYSTEM RESET SIGNAL INPUT (NEGATIVE-LOGIC)
31	TCIN	LONGITUDINAL TIME AND CONTROL CODE INPUT
51	TCT	INPUT SELECT FLAG OUTPUT
53	TMO	TIME OVER SIGNAL OUTPUT (NEGATIVE-LOGIC)
7	WR	WRITE SIGNAL OUTPUT (NEGATIVE-LOGIC)
47	VDD	POWER LINE (+5V)
61	VDD	
40	GND	GND LINE
54	GND	
64	TEST	TEST MODE SET INPUT (TO BE CONNECTED WITH GND)
63	TPN	
37	TSG1	
38	TSG2	
39	TSG3	

CX7913 (SONY)

C-MOS VITC (VERTICAL INTERVAL TIME CODE) READER

– TOP VIEW –

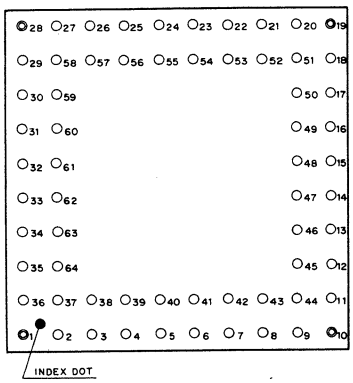

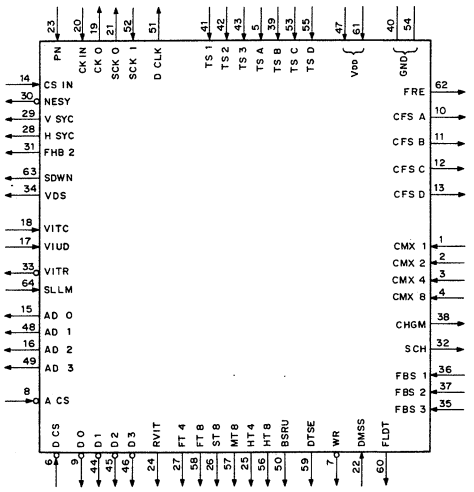

PIN NO.	IN	OUT	SYMBOL	PIN NO.	IN	OUT	SYMBOL	PIN NO.	IN	OUT	SYMBOL	PIN NO.	IN	OUT	SYMBOL
1	○		CMX 1	17	○		VIUD	33		○	VITR	49		○	AD 3
2	○		CMX 2	18	○		VITC	34		○	VDS	50		○	BSRU
3	○		CMX 4	19		○	CK O	35	○		FBS 3	51		○	D CLK
4	○		CMX 8	20	○		CK IN	36	○		FBS 1	52	○		SCK I
5	○		TS A	21		○	SCK O	37	○		FBS 2	53	○		TS C
6	○		D CS	22	○		DMSS	38		○	CHGM	54			GND
7		○	WR	23	○		PN	39	○		TS B	55	○		TS D
8	○		A CS	24		○	RVIT	40			GND	56		○	HT 8
9		○	D O	25		○	HT 4	41	○		TS 1	57		○	MT 8
10		○	CFS A	26		○	ST 8	42	○		TS 2	58		○	FT 8
11		○	CFS B	27		○	FT 4	43	○		TS 3	59		○	DTSE
12		○	CFS C	28		○	H SYC	44		○	D 1	60		○	FLDT
13		○	CFS D	29		○	V SYC	45		○	D 2	61	○		Vdd(+5V)
14	○		CS IN	30		○	NESY	46		○	D 3	62		○	FRE
15		○	AD 0	31		○	FHB 2	47	○		Vdd(+5V)	63		○	SDWN
16		○	AD 2	32		○	SCH	48		○	AD 1	64	○		SLLM

TIMING CHART

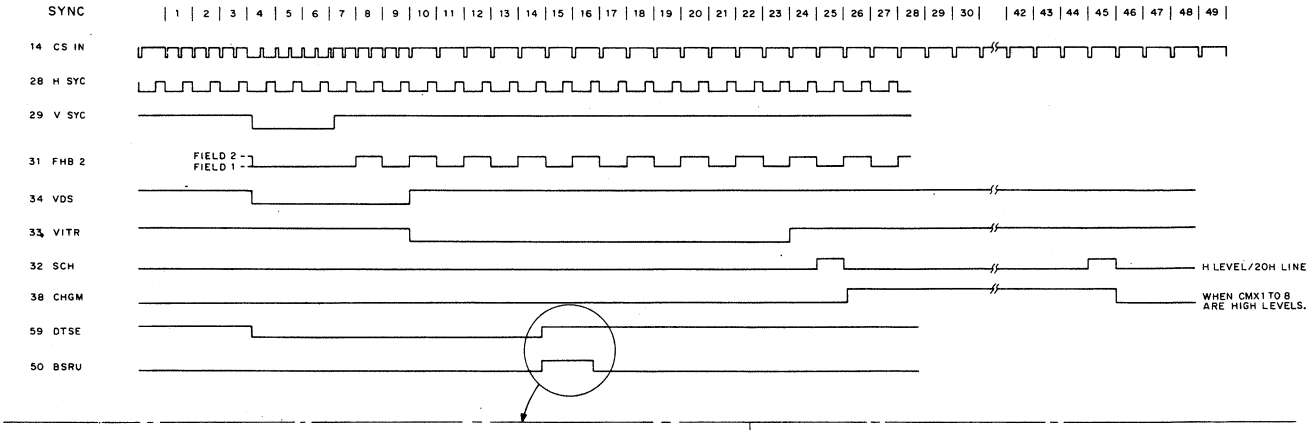

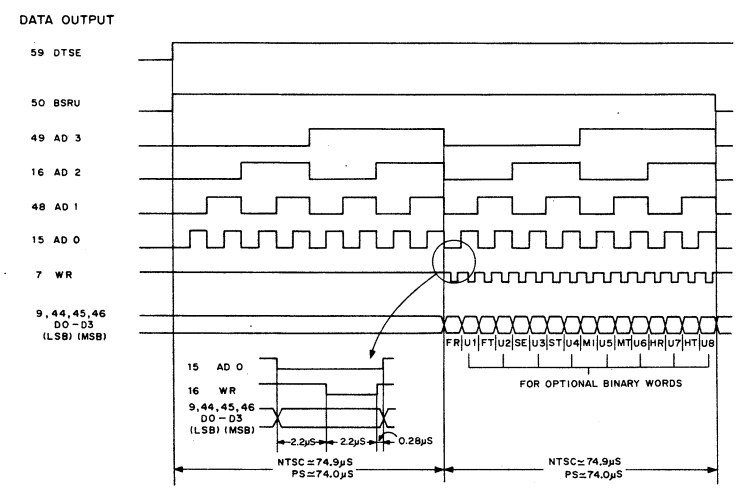

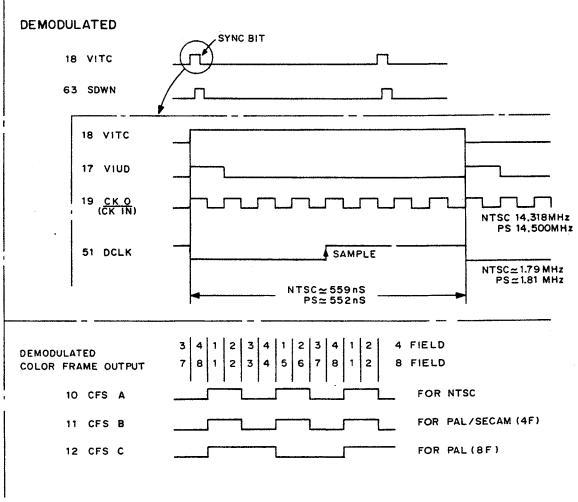

#36,37,35 FBS1-FBS3 FIELD BIT DATA SELECT

FBS 3	FBS 2	FBS 1	#60 FLDT OUTPUTS
0	0	0	FT 4
0	0	1	FT 8
0	1	0	ST 8
0	1	1	MT 8
1	0	0	HT 4
1	0	1	HT 8
1	1	0	—
1	1	1	—

#1,2,3,4 CHARACTER MIX TIMING SELECT

CMX 8	CMX 4	CMX 2	CMX 1	INSERTION LINES(#38 CHGM IS HIGH)	
				NTSC	PAL/SECAM
0	0	0	0	—	—
0	0	0	1	—	—
0	0	1	0	—	—
0	0	1	1	—	263~282, 575~594
0	1	0	0	246~265	243~262, 555~574
0	1	0	1	226~245	223~242, 535~554
0	1	1	0	206~225	203~222, 515~534
0	1	1	1	186~205	183~202, 495~514
1	0	0	0	166~185	163~182, 475~494
1	0	0	1	146~165	143~162, 455~474
1	0	1	0	126~145	123~142, 435~454
1	0	1	1	106~125	103~122, 415~434
1	1	0	0	86~105	83~102, 395~414
1	1	0	1	66~85	63~82, 375~394
1	1	1	0	46~65	43~62, 355~374
1	1	1	1	26~45	23~42, 335~354

NOTE 0 : LOW LEVEL
1 : HIGH LEVEL

FUNCTIONAL PIN DEFINITION

Pin No.	SYMBOL	DESCRIPTION
8	A CS	ADDRESS LINE CHIP SELECT INPUT (NEGATIVE-LOGIC)
15	AD 0	ADDRESS LINE
48	AD 1	
16	AD 2	
49	AD 3	
50	BSRU	DATA BUS OUTPUT STATE
10	CFS A	DEMODULATED COLOR FRAME OUTPUT
11	CFS B	
12	CFS C	
13	CFS D	
38	CHGM	CHARACTER MIX GATE SIG OUTPUT
20	CK IN	CLOCK IN
19	CK O	CLOCK OUT
1	CMX 1	CHARACTER MIX TIMING SELECT INPUT
2	CMX 2	
3	CMX 4	
4	CMX 8	
14	CS IN	COMPOSITE SYNC (C SYNC) INPUT
51	D CLK	DATA SAMPLING CLOCK OUTPUT
6	D CS	DATA LINE CHIP SELECT (NEGATIVE-LOGIC)
22	DMSS	DATA MIX/SEPARATE SELECT INPUT
9	D 0	PARALLEL OUTPUT DATA LINE (NEGATIVE-LOGIC)
44	D 1	
45	D 2	
46	D 3	
59	DTSE	VALID DATA OUTPUT STATE
36	FBS 1	FIELD BIT DATA SELECT
37	FBS 2	
35	FBS 3	
31	FHB 2	1/2 H SYNC OUTPUT
60	FLDT	FIELD BIT DATA OUTPUT
62	FRE	FORWARD/REVERSE OUTPUT (LOW LEVEL; FORWARD)
27	FT 4	SPECIFIED BIT DATA OUTPUT
58	FT 8	
28	H SYC	H SYNC OUTPUT
25	HT 4	SPECIFIED BIT DATA OUTPUT
56	HT 8	
57	MT 8	
30	NESY	C SYNC INPUT STATE (NEGATIVE-LOGIC)
23	PN	RESET INPUT
24	RVIT	SERIAL OUTPUT DATA LINE
32	SCH	CHARACTER MIX GATE OUTPUT
21	SCK O	SYSTEM CLOCK OUTPUT (1/16 CLOCK)
52	SCK I	SYSTEM CLOCK INPUT
63	SDWN	INTERNAL SYNC OUTPUT
64	SLLM	READ SIZE SELECT
26	ST 8	SPECIFIED BIT DATA OUTPUT
34	VDS	INTERNAL SYNC OUTPUT
18	VITC	CLIPPED VIDEO INPUT
33	VITR	VITC READ STATE OUTPUT (NEGATIVE-LOGIC)
17	VIUD	CLIPPED VIDEO EDGE INPUT
29	V SYC	V SYNC OUTPUT
7	WR	WRITE SIGNAL OUTPUT (NEGATIVE-LOGIC)
47	VDD	DC +5V SUPPLY
61	VDD	
40	GND	GROUND REFERENCE
54	GND	
41	TS 1	TEST INPUT (CONNECT WITH GND)
42	TS 2	
43	TS 3	
5	TS A	
39	TS B	
53	TS C	
55	TS D	

CX7913A (SONY)
C-MOS VITC (VERTICAL INTERVAL TIME CODE) READER
— TOP VIEW —

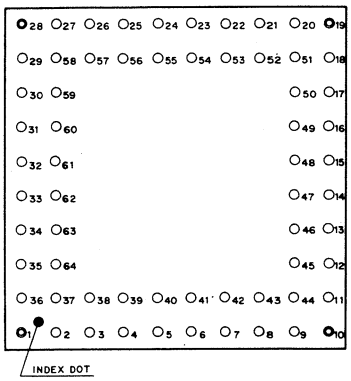

PIN NO.	IN	OUT	SYMBOL	PIN NO.	IN	OUT	SYMBOL	PIN NO.	IN	OUT	SYMBOL	PIN NO.	IN	OUT	SYMBOL
1	○		CMX 1	17	○		CK	33		○	VITR	49		○	AD 3
2	○		CMX 2	18	○		VITC	34		○	VDS	50		○	BSRV
3	○		CMX 4	19		○	CK O	35	○		FBS 3	51		○	D CLK
4	○		CMX 8	20	○		CK IN	36	○		FBS 1	52	○		SCK I
5	○		OSL 1	21		○	SCK O	37	○		FBS 2	53	○		S1
6	○		D CS	22	○		DMSS	38		○	CHGM	54		○	GND
7		○	WR	23	○		PN	39	○		TS1I	55	○		S2
8	○		A CS	24		○	LCKO	40		○	GND	56		○	AS6
9		○	DO O	25		○	AS5	41	○		TS2I	57		○	AS4
10		○	CFS A	26		○	AS3	42	○		INTR	58		○	AS2
11		○	CFS B	27		○	AS1	43	○		TS3I	59		○	DTSE
12		○	CFS C	28		○	HDO	44		○	DO 1	60		○	FLDT
13		○	CFS D	29		○	VDO	45		○	DO 2	61	○		VDD(+5V)
14	○		CS IN	30		○	NESY	46		○	DO 3	62		○	FWRE
15		○	AD O	31		○	FHB 2	47	○		VDD(+5V)	63		○	DRAF
16		○	AD 2	32		○	SCH	48		○	AD 1	64	○		SLLM

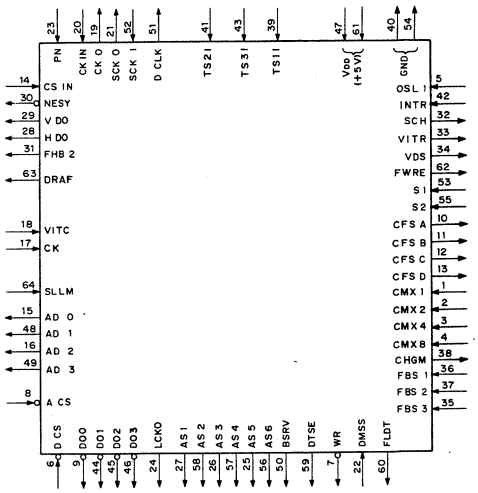

BLOCK DIAGRAM

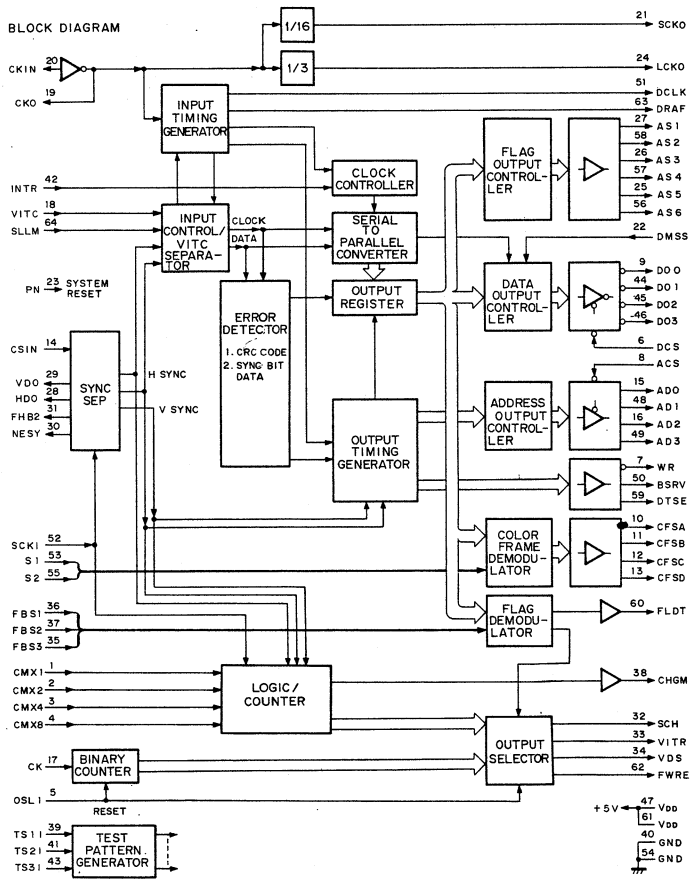

FUNCTIONAL PIN DEFINITION

Pin No.	SYMBOL	DESCRIPTION
8	ACS	ADDRESS LINE ENABLE INPUT
15	AD0	ADDRESS DATA OUTPUT
48	AD1	
16	AD2	
49	AD3	
27	AS1	PARALLEL DATA OUTPUT
58	AS2	
26	AS3	
57	AS4	
25	AS5	
56	AS6	
50	BSRV	DATA OUT FLAG OUTPUT
10	CFSA	DEMODULATED COLOR FRAME OUTPUT
11	CFSB	
12	CFSC	
13	CFSD	
38	CHGM	CHARACTER V POSITION GATE SIGNAL OUTPUT
17	CK	INTERNAL COUNTER CLOCK INPUT
20	CKIN	CLOCK INPUT
19	CKO	CLOCK OUTPUT (NEGATIVE-LOGIC)
1	CMX1	CHARACTER V POSITION SELECT INPUT
2	CMX2	
3	CMX4	
4	CMX8	
14	CSIN	COMPOSITE SYNC INPUT
51	DCLK	VITC READ CLOCK OUTPUT
6	DCS	DATA LINE ENABLE INPUT
22	DMSS	ASSIGNED BIT DATA SELECT INPUT
9	DO0	DATA OUT (NEGATIVE-LOGIC)
44	DO1	
45	DO2	
46	DO3	
63	DRAF	VITC SYNCHRONIZE SIGNAL D OUTPUT
59	DTSE	VITC DATA SEARCH FLAG OUTPUT
36	FBS1	FIELD MARK POSITION SELECT 1 INPUT
37	FBS2	FIELD MARK POSITION SELECT 2 INPUT
35	FBS3	FIELD MARK POSITION SELECT 3 INPUT
31	FHB2	FH/2 SIGNAL OUTPUT
60	FLDT	FIELD DATA OUTPUT
62	FWRE	TAPE DIRECTION SIGNAL OUTPUT
28	HDO	HORIZONTAL SYNC DRIVE OUTPUT
42	INTR	INTERRUPT REQUEST INPUT
24	LCKO	LTC CLOCK OUTPUT
30	NESY	LOST-SYNC FLAG OUTPUT
5	OSL1	OUTPUT SIGNAL SELECT 1 INPUT
23	PN	POWER ON RESET INPUT
53	S1	SIGNAL FORMAT SELECT S1 INPUT
55	S2	SIGNAL FORMAT SELECT S2 INPUT
32	SCH	OUTPUT SIGNAL SCH
52	SCKI	SYSTEM CLOCK INPUT
21	SCKO	SYSTEM CLOCK OUTPUT
64	SLLM	READ SIZE SELECT INPUT
29	VDO	VERTICAL SYNC DRIVE OUTPUT
34	VDS	OUTPUT SIGNAL VDS
18	VITC	VITC SIGNAL INPUT
33	VITR	OUTPUT SIGNAL VITR
7	WR	WRITE SIGNAL OUTPUT (NEGATIVE-LOGIC)
47	VDD	POWER LINE (+5V)
61	VDD	
40	GND	GND LINE
54	GND	
39	TS1I	TEST INPUT
41	TS2I	
43	TS3I	

#1,2,3,4 CMX1 TO 8;CHARACTER V POSITION SELECT

CMX8	CMX4	CMX2	CMX1	INSERTION LINE (#38 CHGM IS H LEVEL) NTSC	PAL,SECAM
0	0	0	0	---	---
0	0	0	1	---	284-303 596-615
0	0	1	0	---	264-283 576-595
0	0	1	1	---	244-263 556-575
0	1	0	0	227-246	224-243 536-555
0	1	0	1	207-226	204-223 516-535
0	1	1	0	187-206	184-203 496-515
0	1	1	1	167-186	164-183 476-495
1	0	0	0	147-166	144-163 456-475
1	0	0	1	127-146	124-143 436-455
1	0	1	0	107-126	104-123 416-435
1	0	1	1	87-106	84-103 396-415
1	1	0	0	67- 86	64- 83 376-395
1	1	0	1	47- 66	44- 63 356-375
1	1	1	0	27- 46	24- 43 336-355
1	1	1	1	---	---

#36,37,35 FBS1 TO FBS3;FIELD DATA SELECT

FBS3	FBS2	FBS1	#60 FLDT OUTPUT
0	0	0	AS1 (VITC BIT No.14)
0	0	1	AS2 (VITC BIT No.15)
0	1	0	AS3 (VITC BIT No.35)
0	1	1	AS4 (VITC BIT No.55)
1	0	0	AS5 (VITC BIT No.74)
1	0	1	AS6 (VITC BIT No.75)
1	1	0	------
1	1	1	------

#53,55 S1,S2;SIGNAL FORMAT SELECT

S2	S1	#13 CFSD FORMAT
0	0	UNSPECIFIED
0	1	
1	0	NTSC NON DROP FRAME
1	1	NTSC DROP FRAME

0;LOW LEVEL
1;HIGH LEVEL

TIMING CHART

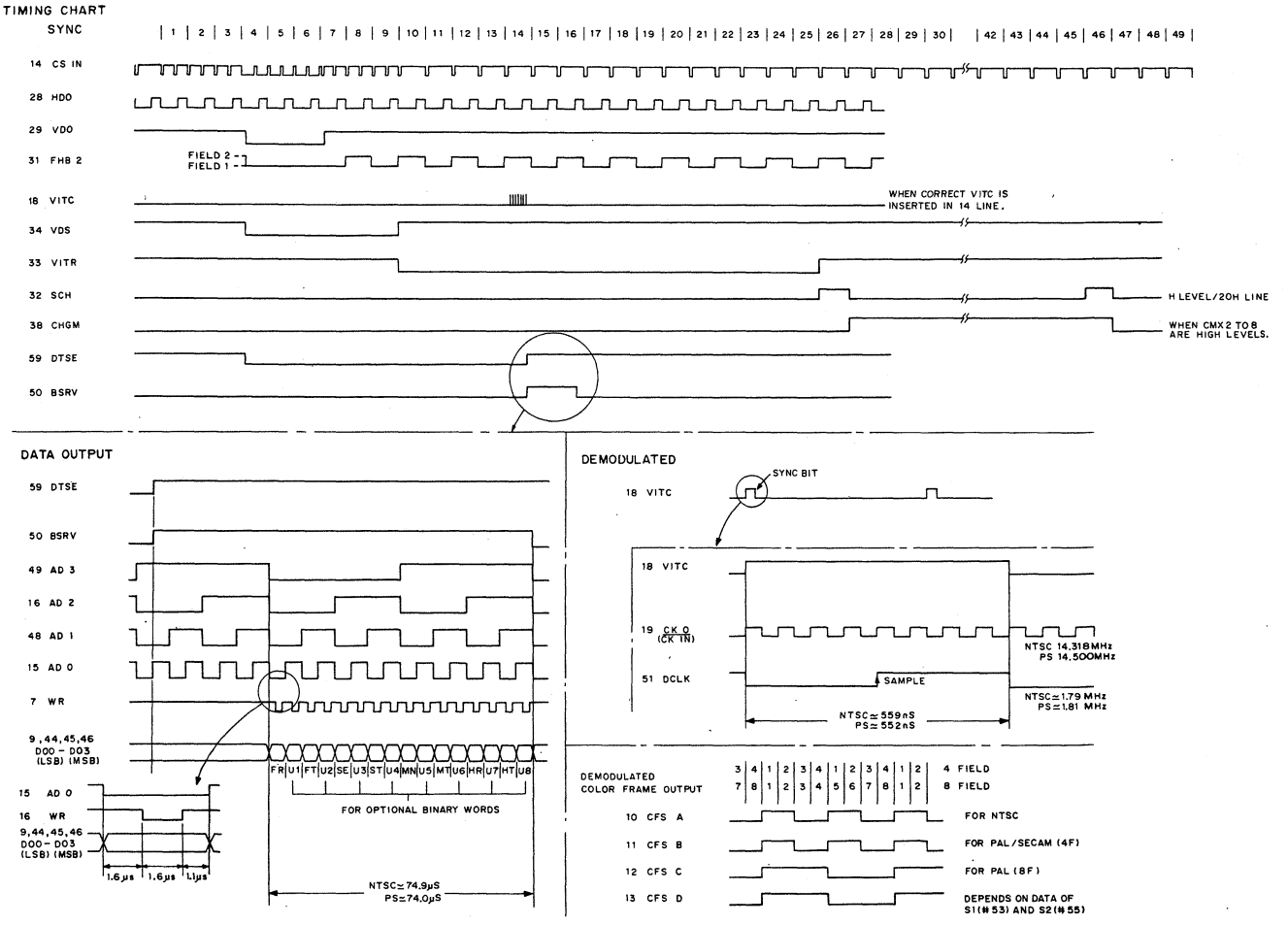

DAC-IC88C (DATEL)
8-BIT DIGITAL-TO-ANALOG CONVERTER
-TOP VIEW-

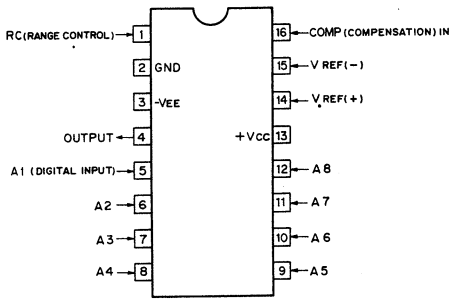

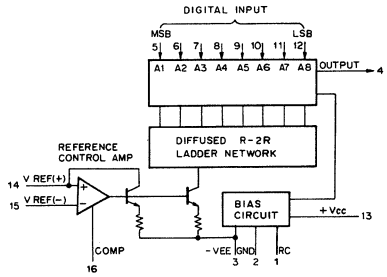

FT5709M (FUJITSU)
TRANSISTOR ARRAY

—TOP VIEW—

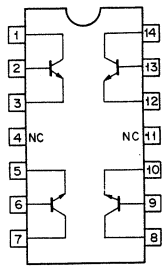

HA17458GS (HITACHI)
OPERATIONAL AMPLIFIER
— TOP VIEW —

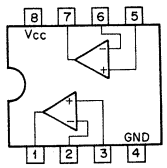

HA17741GS (HITACHI)
OPERATIONAL AMPLIFIER
—TOP VIEW—

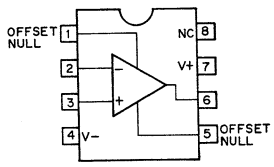

HI1-0201-5 (HARRIS)
HI1-201 (HARRIS)
C-MOS ANALOG SWITCH
— TOP VIEW —

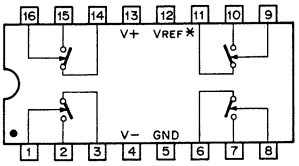

CONT IN	SW
0	
1	

0 ; LOW LEVEL
1 ; HIGH LEVEL

* NOTE

INTERFACE	VREF CONNECTION
TTL	OPEN
C-MOS	VDD ≦ 5.5V ; OPEN
	VDD > 5.5V ; TO VDD

HM6116LP-2 (HITACHI) (ACCESS TIME = 120 nS)
HM6116LP-3 (HITACHI) (ACCESS TIME = 150 nS)
HM6116LP-4 (HITACHI) (ACCESS TIME = 200 nS)
MSM5128-12RS (OKI) (ACCESS TIME = 120 nS)
MSM5128-15RS (OKI) (ACCESS TIME = 150 nS)
MSM5128-20RS (OKI) (ACCESS TIME = 200 nS)
C-MOS 16384(2048x8)-BIT HIGH SPEED STATIC RAM
— TOP VIEW —

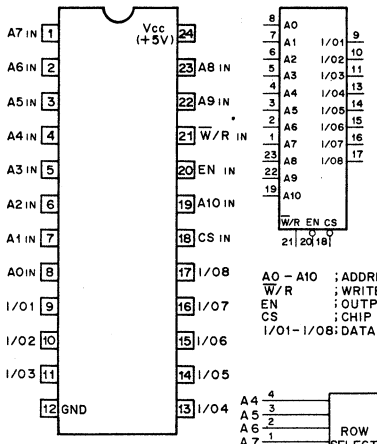

INPUTS			FUNCTION
CS	W/R	EN	
0	0	X	WRITE
0	1	0	READ
0	1	1	DISABLE (OUTPUT=HI-Z)
1	X	X	DISABLE (OUTPUT=HI-Z)

0 ; LOW LEVEL
1 ; HIGH LEVEL
X ; DON'T CARE
HI-Z ; HIGH IMPEDANCE

A0 - A10 ; ADDRESS INPUTS
W/R ; WRITE / READ ENABLE
EN ; OUTPUT ENABLE
CS ; CHIP SELECT
I/01 - I/08 ; DATA INPUTS / OUTPUTS

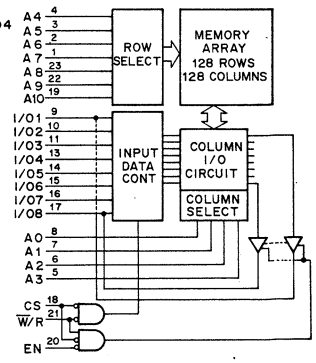

LH0080 (SHARP)
LH0080A (SHARP)
μPD780C (NEC)
μPD780C-1 (NEC)
Z80 (ZILOG)
Z80A (ZILOG)
N-MOS 8-BIT MICROPROCESSOR
— TOP VIEW —

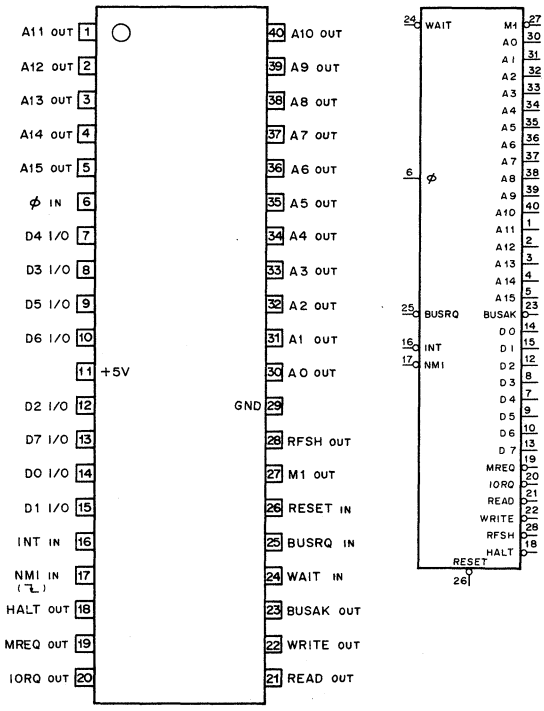

LH0082 (SHARP)
LH0082A (SHARP)
Z80-CTC (ZILOG)
Z80A-CTC (ZILOG)
N-MOS COUNTER TIMER CIRCUIT
— TOP VIEW —

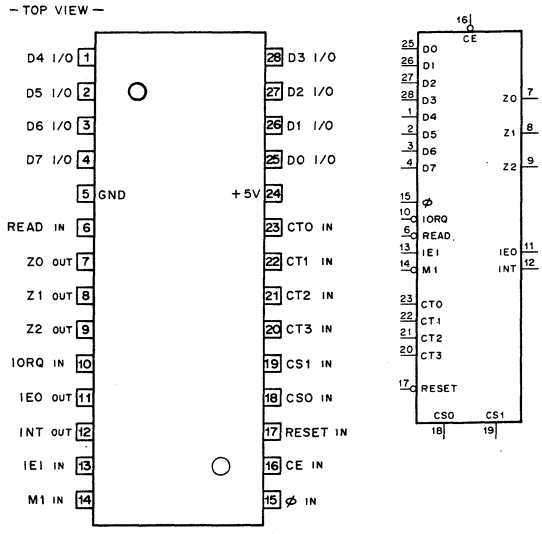

φ	; SYSTEM CLOCK
CE	; CHIP ENABLE
CS0, CS1	; CHANNEL SELECT
CT0-CT3	; EXTERNAL CLOCK/TIMER TRIGGER
D0-D7	; 3-STATE DATA INPUT/OUTPUT
IEI	; INTERRUPT ENABLE INPUT
IEO	; INTERRUPT ENABLE OUTPUT
INT	; INTERRUPT REQUEST (OPEN DRAIN)
IORQ	; I/O REQUEST
M1	; MACHINE CYCLE 1
READ	; READ CYCLE STATUS
Z0-Z2	; ZERO COUNT/TIME OUT

CHANNEL SELECT FUNCTION

CS1	CS0	SELECTED CHANNEL
0	0	0
0	1	1
1	0	2
1	1	3

0; LOW LEVEL
1; HIGH LEVEL

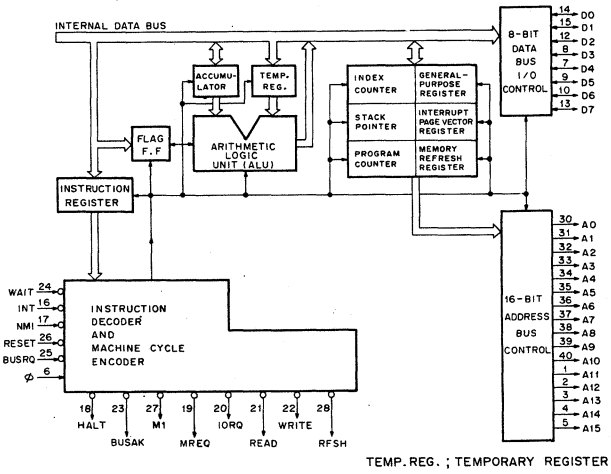

TEMP. REG. ; TEMPORARY REGISTER

φ	; CLOCK
A0-A15	; 3-STATE ADDRESS OUTPUT
BUSAK	; BUS ACKNOWLEDGE
BUSRQ	; BUS REQUEST
D0-D7	; 3-STATE DATA INPUT/OUTPUT
HALT	; HALT STATE
INT	; INTERRUPT REQUEST
IORQ	; 3-STATE I/O REQUEST
M1	; MACHINE CYCLE 1
MREQ	; 3-STATE MEMORY REQUEST
NMI	; NON-MASKABLE INTERRUPT (DOWN EDGE TRIGGER)
READ	; 3-STATE MEMORY READ
RFSH	; REFRESH
WRITE	; 3-STATE MEMORY WRITE

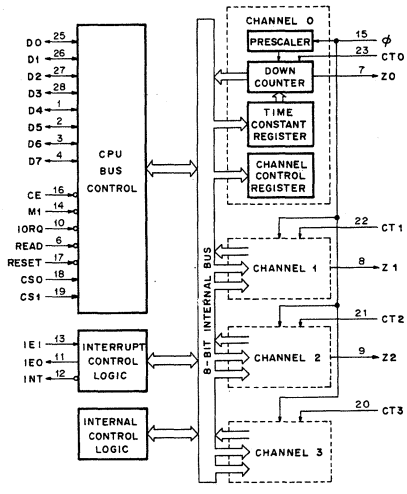

LH0084 (SHARP)
LH0084A (SHARP)
Z80-SIO/O (ZILOG)
Z80A-SIO/O (ZILOG)
N-MOS 2-CHANNEL SERIAL INPUT/OUTPUT FOR MICROCOMPUTER SYSTEM
— TOP VIEW—

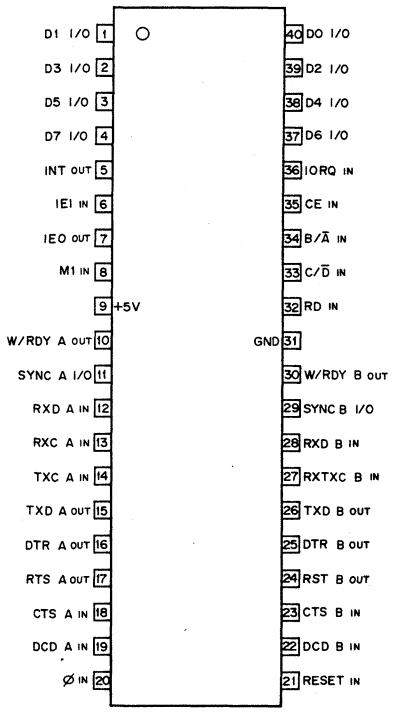

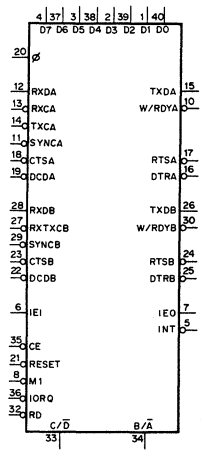

CHANNEL SELECT FUNCTION TABLE

C/D̄	B/Ā	FUNCTION
0	0	CH-A DATA
0	1	CH-B DATA
1	0	CH-A CONT. WORD
1	1	CH-B CONT. WORD

0 ; LOW LEVEL
1 ; HIGH LEVEL

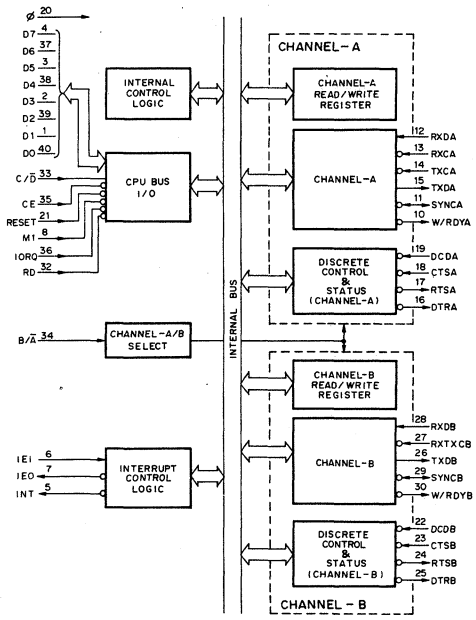

Ø	; SYSTEM CLOCK IN	RXD	; RECEIVE DATA IN
D7-D0	; DATA I/O	RXC	; RECEIVE CLOCK IN
C/D̄	; CONTROL/DATA SELECT IN	TXC	; TRANSMIT CLOCK IN
CE	; CHIP ENABLE IN	TXD	; TRANSMIT DATA OUT
M1	; MACHINE CYCLE 1 IN	SYNC	; EXTERNAL CHARACTER SYNCHRONIZATION I/O
IORQ	; I/O REQUEST IN	W/RDY	; WAIT/READY OUT
RD	; READ IN	DCD	; DATA CARRIER DETECT IN
B/Ā	; CHANNEL B/A SELECT IN	CTS	; CLEAR TO SEND IN
IEI	; INTERRUPT ENABLE IN	RTS	; REQUEST TO SEND OUT
IEO	; INTERRUPT ENABLE OUT	DTR	; DATA TERMINAL READY OUT
INT	; INTERRUPT OUT		

M54516P (MITSUBISHI)
INVERTER WITH OPEN-COLLECTOR
(DARLINGTON-CONNECTED TRANSISTOR ARRAY)
— TOP VIEW—

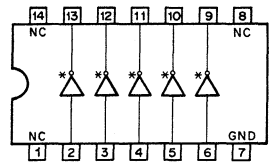

M54517P (MITSUBISHI)
INVERTER WITH OPEN-COLLECTOR
(DARLINGTON-CONNECTED TRANSISTOR ARRAY)
— TOP VIEW —

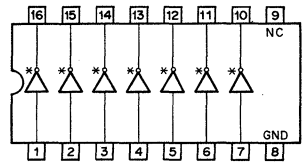

MB3759 (FUJITSU)
PWM POWER CONTROL
—TOP VIEW—

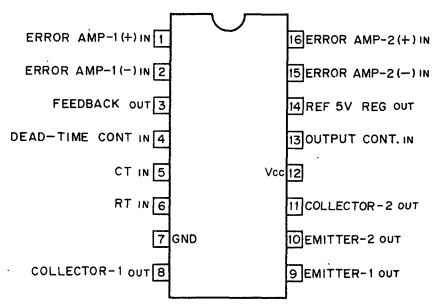

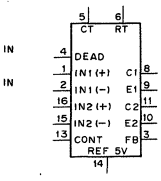

OUTPUT CONTROL	OUTPUT FUNCTION
0	PARALLEL
1	PUSH-PULL

0 ; GROUNDED
1 ; CONNECTED TO PIN 14

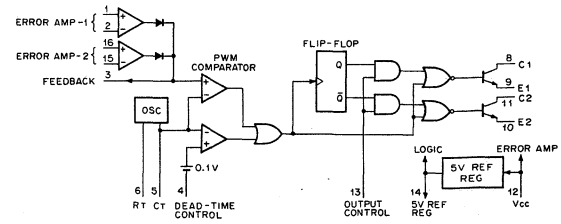

HM6168HP-45 (HITACHI) (ACCESS TIME = 45 nS)
HM6168HP-55 (HITACHI) (ACCESS TIME = 55 nS)
HM6168HP-70 (HITACHI) (ACCESS TIME = 70 nS)
MB8168-45 (FUJITSU) (ACCESS TIME = 45 nS)
MB8168-55 (FUJITSU) (ACCESS TIME = 55 nS)
MB8168-70 (FUJITSU) (ACCESS TIME = 70 nS)
MB8168-90 (FUJITSU) (ACCESS TIME = 90 nS)
N-MOS 16384-BIT (4096x4) STATIC RAM
— TOP VIEW —

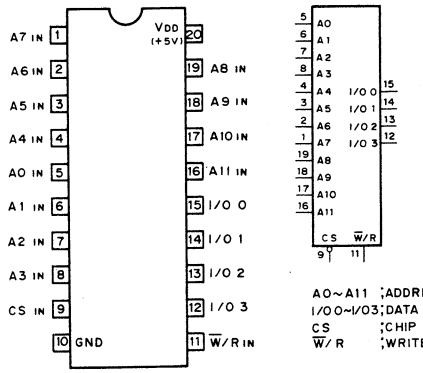

INPUTS		MODE
CS	W/R	
0	0	WRITE
0	1	READ
1	X	DISABLE (OUTPUT;HI-Z)

0 ; LOW LEVEL
1 ; HIGH LEVEL
X ; DON'T CARE
HI-Z ; HIGH IMPEDANCE

A0~A11 ;ADDRESS INPUTS
I/O0~I/O3;DATA INPUTS/OUTPUTS
CS ;CHIP SELECT INPUT
W/R ;WRITE/READ ENABLE INPUT

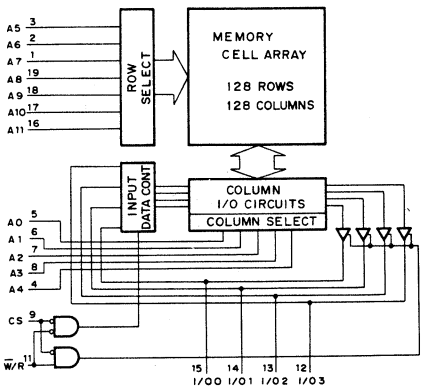

MB8747 (FUJITSU)
C-MOS SERIAL TO/FROM PARALLEL CONVERTER WITH OSCILLATOR
— TOP VIEW —

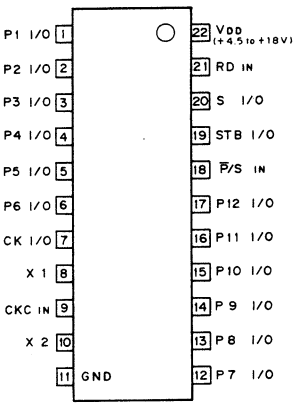

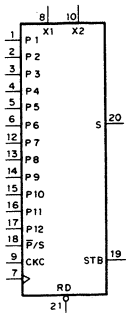

P1 to P12 ; PARALLEL DATA IN/OUT
CK ; CLOCK IN/OUT
CKC ; CLOCK I/O CONTROL IN
X1,X2 ; X'TAL
P/S ; PARALLEL/SERIAL CONTROL IN
STB ; STROBE
S ; SERIAL DATA IN/OUT

CKC	CK
0	OUT
1	IN

RD	P/S	MODE	P1toP12	S	STB
0	0	OPEN	IN	HI-Z	OUT
0	1	RESET	0	IN	IN
1	0	P→S	IN	OUT	OUT
1	1	S→P	OUT	IN	IN

0 ; LOW LEVEL
1 ; HIGH LEVEL
HI-Z ; HIGH IMPEDANCE
P→S ; PARALLEL→SERIAL CONV
S→P ; SERIAL→PARALLEL CONV

P/S = 0 RD=1 (PARALLEL → SERIAL CONV)

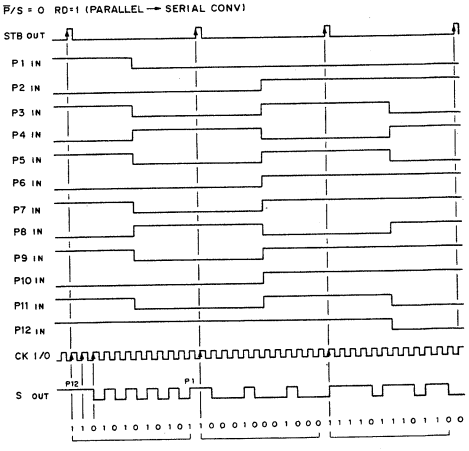

P/S = 1 RD = 1 (SERIAL → PARALLEL CONV)

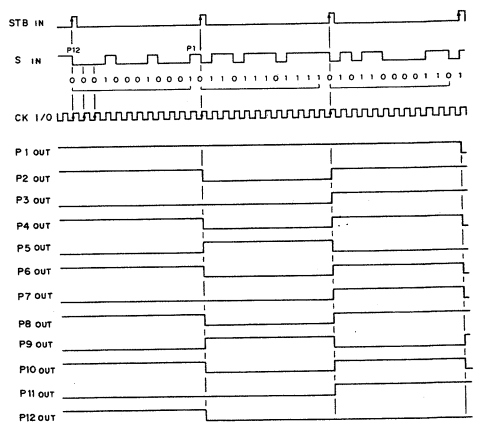

MC1595L (MOTOROLA)
LINEAR MULTIPLIER

—TOP VIEW—

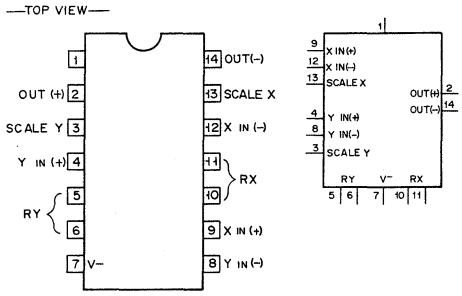

MC10105L (MOTOROLA)
HD10105 (HITACHI)
ECL 2-3-2-INPUT OR/NOR GATE

—TOP VIEW—

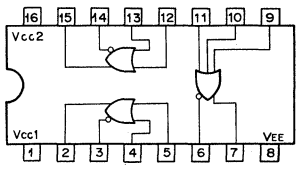

MC10115L (MOTOROLA)
ECL LINE RECEIVER
— TOP VIEW —

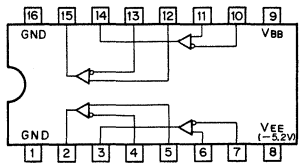

MC10116L (MOTOROLA)
HD10116 (HITACHI)
ECL DIFFERENTIAL OR/NOR LINE RECEIVER

-TOP VIEW-

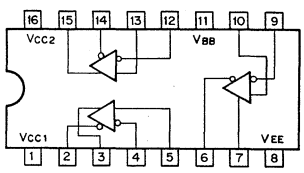

MC10117L(MOTOROLA)
HD10117 (HITACHI)
ECL 2-WIDE 2-3-INPUT OR-AND/OR-AND-INVERT GATE

—TOP VIEW—

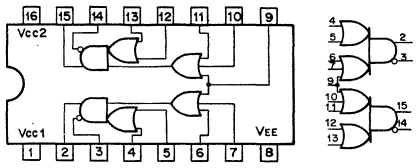

MC10124L (MOTOROLA)
HD10124 (HITACHI)
ECL TTL-TO-ECL TRANSLATOR
— TOP VIEW —

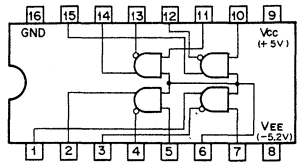

MC10125L (MOTOROLA)
HD10125 (HITACHI)
ECL ECL-TO-TTL TRANSLATOR
— TOP VIEW —

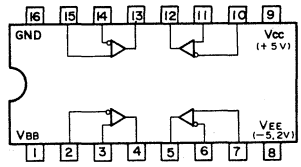

MC10131L (MOTOROLA)
HD10131 (HITACHI)
ECL D-TYPE FLIP FLOP

—TOP VIEW—

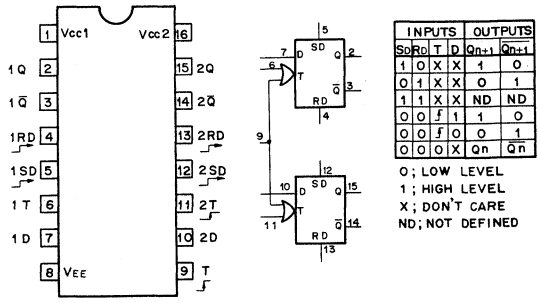

INPUTS				OUTPUTS	
SD	RD	T	D	Qn+1	Qn+1
1	0	X	X	1	0
0	1	X	X	0	1
1	1	X	X	ND	ND
0	0	↓	1	1	0
0	0	↓	0	0	1
0	0	0	X	Qn	Qn

0; LOW LEVEL
1; HIGH LEVEL
X; DON'T CARE
ND; NOT DEFINED

MC10198L (MOTOROLA)
RETRIGGERABLE MONOSTABLE MULTIVIBRATOR
— TOP VIEW —

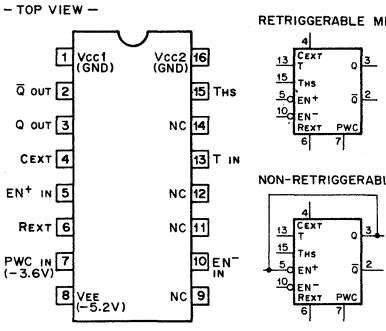

RETRIGGERABLE MMV

NON-RETRIGGERABLE MMV

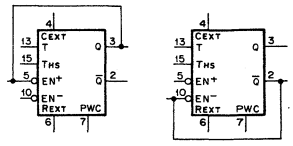

T : CLOCK TRIGGER INPUT
THS : HIGH-SPEED CLOCK TRIGGER INPUT
EN+ : TRIGGER POSITIVE ENABLE
EN- : TRIGGER NEGATIVE ENABLE
PWC : EXTERNAL PULSE WIDTH CONTROL

FUNCTION TABLE

EN+	EN-	TRIG. SLOPE
0	0	↓
0	1	↓
1	0	↓
1	1	DISABLE

0; LOW LEVEL
1; HIGH LEVEL

OUTPUT PULSE WIDTH : PWQ
PWQ = 1.19 · CEXT (REXT +284)
WHERE
PWQ = SEC
CEXT = FARADS
REXT = OHMS
VEE = -5.2V
PWC = -3.6V

NOTE ; · SELECT REXT RANGING FROM ZERO TO 16K OHMS.
SELECT CEXT GREATER THAN 20PF.

NE527H (SIGNETICS)
VOLTAGE COMPARATOR

—BOTTOM VIEW—

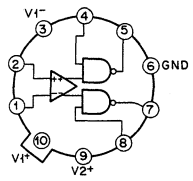

NE527N (SIGNETICS)
VOLTAGE COMPARATOR
— TOP VIEW —

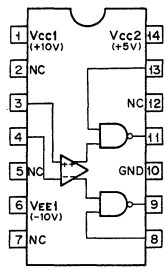

NJM2903D (JRC)
OPERATIONAL AMPLIFIER
— TOP VIEW —

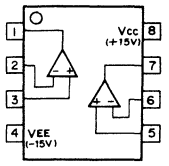

NJM4558D (JRC)
NJM4558DFA (JRC)
NJM4558DMD (JRC)
μPC4558C (NEC)
OPERATIONAL AMPLIFIER
-TOP VIEW-

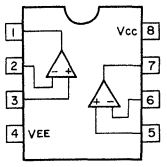

NJM4559D (JRC)
OPERATIONAL AMPLIFIER
-TOP VIEW-

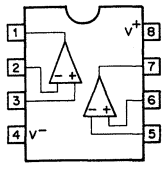

NJM4560D (JRC)
NJM4560DD (JRC)
NJM4560DN (JRC)
NJM4560DX (JRC)
OPERATIONAL AMPLIFIER
-TOP VIEW-

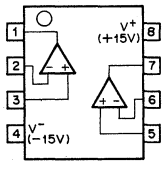

NJM78L??A (JRC)
VOLTAGE REGULATOR

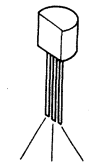

OUT GND IN
(1) (2) (3)

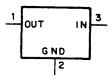

2V	NJM78L02A
5V	NJM78L05A
6V	NJM78L06A
8V	NJM78L08A
9V	NJM78L09A
12V	NJM78L12A
15V	NJM78L15A

SN7400N (TI)
M53200P (MITSUBISHI)
SN74S00N (TI)
SN74LS00N (TI)
HD74LS00P (HITACHI)
TTL NAND GATE
—TOP VIEW—

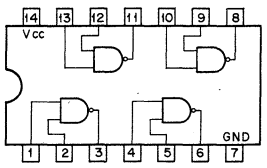

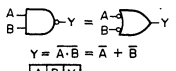

$Y = \overline{A \cdot B} = \overline{A} + \overline{B}$

A	B	Y
0	0	1
0	1	1
1	0	1
1	1	0

0;LOW LEVEL
1;HIGH LEVEL

SN7402N (TI)
M53202P (MITSUBISHI)
SN74S02N (TI)
SN74LS02N (TI)
TTL 2-INPUT POSITIVE-NOR GATE
—TOP VIEW —

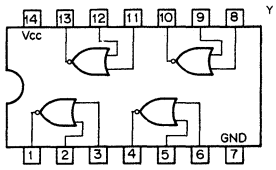

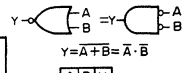

$Y = \overline{A+B} = \overline{A} \cdot \overline{B}$

A	B	Y
0	0	1
0	1	0
1	0	0
1	1	0

0:LOW LEVEL
1;HIGH LEVEL

SN7403N (TI)
SN74L03N (TI)
SN74S03N (TI)
SN74LS03N (TI)
TTL 2-INPUT POSITIVE-NAND GATE
WITH OPEN-COLLECTOR
—TOP VIEW—

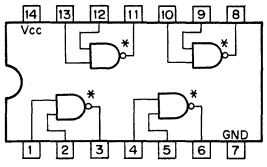

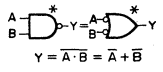

$Y = \overline{A \cdot B} = \overline{A} + \overline{B}$

A	B	Y
0	0	1
0	1	1
1	0	1
1	1	0

0;LOW LEVEL
1;HIGH LEVEL

SN7404N (TI)
M53204P (MITSUBISHI)
SN74L04N (TI)
SN74S04N (TI)
SN74LS04N (TI)
HD74LS04P (HITACHI)
TTL INVERTER
—TOP VIEW—

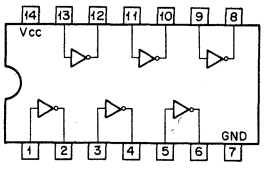

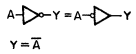

$Y = \overline{A}$

A	Y
0	1
1	0

0;LOW LEVEL
1;HIGH LEVEL

SN7405N (TI)
SN74LS05N (TI)
74LS05PC (FSC)
TTL INVERTER WITH OPEN-COLLECTOR
-TOP VIEW-

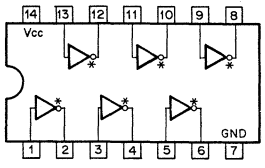

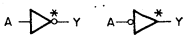

$Y = \overline{A}$

A	Y	
0	1	0;LOW LEVEL
1	0	1;HIGH LEVEL
		*;OPEN COLLECTOR

SN7406N (TI)
HD7406P (HITACHI)
M53206P (MITSUBISHI)
TTL INVERTER BUFFER/DRIVER WITH OPEN-COLLECTOR
— TOP VIEW —

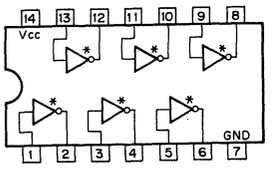

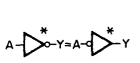

$Y = \overline{A}$

A	Y
0	1
1	0

0 ; LOW LEVEL
1 ; HIGH LEVEL
* ; OPEN COLLECTOR

SN7408N (TI)
SN74S08N (TI)
SN74LS08N (TI)
HD74LS08P (HITACHI)
TTL 2-INPUT POSITIVE-AND GATE
— TOP VIEW —

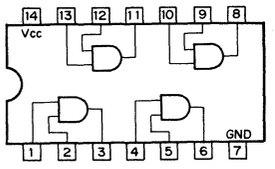

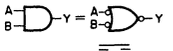

$Y = A \cdot B = \overline{\overline{A} + \overline{B}}$

A	B	Y
0	0	0
0	1	0
1	0	0
1	1	1

0 ; LOW LEVEL
1 ; HIGH LEVEL

SN7410N (TI)
SN74L10N (TI)
SN74S10N (TI)
SN74LS10N (TI)
HD74LS10P (HITACHI)
TTL 3-INPUT POSITIVE NAND GATE
— TOP VIEW —

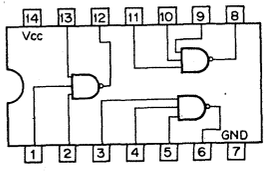

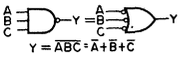

$Y = \overline{ABC} = \overline{A} + \overline{B} + \overline{C}$

A	B	C	Y
0	0	0	1
0	0	1	1
0	1	0	1
0	1	1	1
1	0	0	1
1	0	1	1
1	1	0	1
1	1	1	0

0 : LOW LEVEL
1 : HIGH LEVEL

SN74H11N (TI)
SN74S11N (TI)
SN74LS11N (TI)
TTL 3-INPUT POSITIVE-AND GATE
— TOP VIEW —

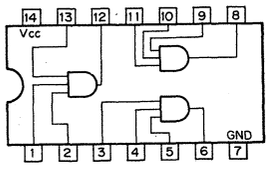

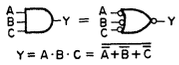

$Y = A \cdot B \cdot C = \overline{\overline{A} + \overline{B} + \overline{C}}$

A	B	C	Y
0	0	0	0
0	0	1	0
0	1	0	0
0	1	1	0
1	0	0	0
1	0	1	0
1	1	0	0
1	1	1	1

0;LOW LEVEL
1;HIGH LEVEL

SN7412N (TI)
SN74LS12N (TI)
TTL 3-INPUT POSITIVE-NAND GATE WITH OPEN-COLLECTOR OUTPUT
— TOP VIEW —

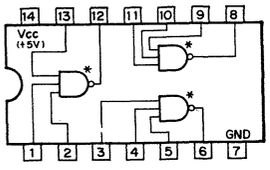

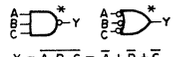

$Y = \overline{A \cdot B \cdot C} = \overline{A} + \overline{B} + \overline{C}$

A	B	C	Y
0	0	0	1
0	0	1	1
0	1	0	1
0	1	1	1
1	0	0	1
1	0	1	1
1	1	0	1
1	1	1	0

0;LOW LEVEL
1;HIGH LEVEL

SN7414N (TI)
SN74LS14N (TI)
TTL SCHMITT TRIGGER INVERTER
— TOP VIEW —

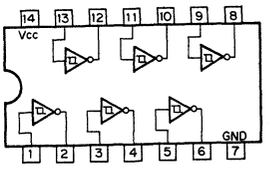

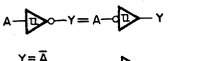

$Y = \overline{A}$

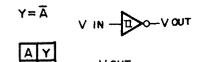

A	Y
0	1
1	0

0;LOW LEVEL
1;HIGH LEVEL

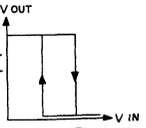

SN7414N-----0.9 1.7V
SN74LS14N---0.8 1.6V

SN7420N (TI)
SN74S20N (TI)
SN74LS20N (TI)
TTL 4-INPUT POSITIVE NAND GATE
—TOP VIEW—

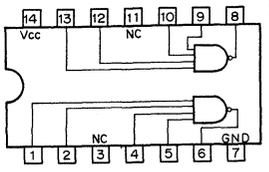

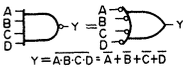

$Y = \overline{A \cdot B \cdot C \cdot D} = \overline{A} + \overline{B} + \overline{C} + \overline{D}$

A	B	C	D	Y
0	0	0	0	1
0	0	0	1	1
0	0	1	0	1
0	0	1	1	1
0	1	0	0	1
:	:	:	:	:
1	1	0	1	1
1	1	1	0	1
1	1	1	1	0

0;LOW LEVEL
1;HIGH LEVEL

SN7427N (TI)
SN74LS27N (TI)
TTL 3-INPUT POSITIVE-NOR GATE
— TOP VIEW —

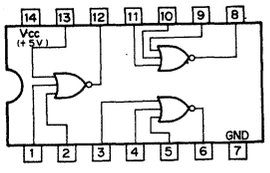

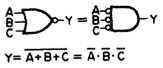

$Y = \overline{A + B + C} = \overline{A} \cdot \overline{B} \cdot \overline{C}$

A	B	C	Y
0	0	0	1
0	0	1	0
0	1	0	0
0	1	1	0
1	0	0	0
1	0	1	0
1	1	0	0
1	1	1	0

0;LOW LEVEL
1;HIGH LEVEL

SN7430N (TI)
SN74S30N (TI)
SN74LS30N (TI)
HD74LS30P (HITACHI)
TTL 8-INPUT NAND GATE
—TOP VIEW—

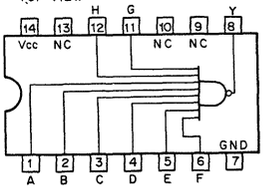

$Y = \overline{A \cdot B \cdot C \cdot D \cdot E \cdot F \cdot G \cdot H}$
$= \overline{A} + \overline{B} + \overline{C} + \cdots\cdots + \overline{H}$

SN 7432N (TI)
SN 74S32N (TI)
SN 74LS32N (TI)
HD 74LS32P (HITACHI)
MB74LS32 (FUJITSU)
M74LS32P (MITSUBISHI)

TTL 2-INPUT POSITIVE - OR GATE
— TOP VIEW —

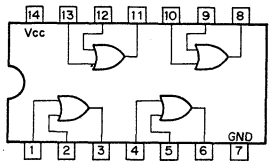

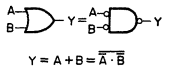

A	B	Y
0	0	0
0	1	1
1	0	1
1	1	1

0;LOW LEVEL
1;HIGH LEVEL

SN7474N (TI)
M53274P (MITSUBISHI)
SN74H 74N (TI)
SN74L 74N (TI)
SN74S74N (TI)
SN74LS74AN (TI)
HD74LS74P (HITACHI)

TTL D-TYPE FLIP FLOP WITH DIRECT SET/RESET
—TOP VIEW—

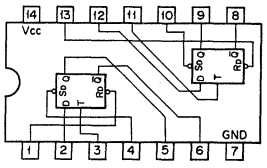

INPUTS				OUTPUTS	
Sd	Rd	T	D	Qn+1	$\overline{Qn+1}$
0	1	X	X	1	0
1	0	X	X	0	1
0	0	X	X	1*	1*
1	1	↑	1	1	0
1	1	↑	0	0	1
1	1	0	X	Qn	$\overline{Qn}$

0;LOW LEVEL
1;HIGH LEVEL
X;DON'T CARE
1*;NONSTABLE

SN7485N (TI)
SN74S85N (TI)
SN74LS85N (TI)

TTL 4-BIT MAGNITUDE COMPARATOR
-TOP VIEW-

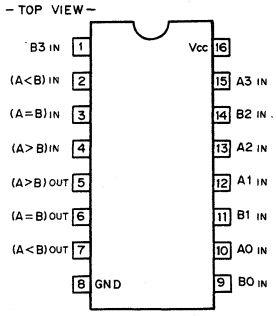

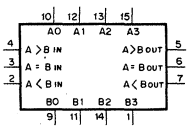

INPUTS								OUTPUTS		
DATA COMPARING					CASCADING					
	A3 , B3	A2 , B2	A1 , B1	A0 , B0	A<B	A=B	A>B	A<B	A=B	A>B
A>B	A3 > B3	X	X	X	X	X	X	0	0	1
	A3 = B3	A2 > B2	X	X						
	A3 = B3	A2 = B2	A1 > B1	X						
	A3 = B3	A2 = B2	A1 = B1	A0 > B0						
A=B	A3 = B3	A2 = B2	A1 = B1	A0 = B0	0	0	0	1	0	1
					0	0	1	0	0	1
					X	1	X	0	1	0
					1	0	0	1	0	0
					1	0	1	0	0	0
A<B	A3 = B3	A2 = B2	A1 = B1	A0 < B0	X	X	X	1	0	0
	A3 = B3	A2 = B2	A1 < B1	X						
	A3 = B3	A2 < B2	X	X						
	A3 < B3	X	X	X						

0;LOW LEVEL 1;HIGH LEVEL X;DON'T CARE

SN7486N (TI)
SN74S86N (TI)
SN74LS86N (TI)
HD74LS86P (HITACHI)

TTL EXCLUSIVE OR GATE
— TOP VIEW —

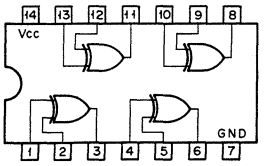

A	B	Y
0	0	0
0	1	1
1	0	1
1	1	0

0;LOW LEVEL
1;HIGH LEVEL

SN74LS107AN (TI)
HD74LS107P (HITACHI)

TTL J-K FLIP FLOP WITH DIRECT RESET
— TOP VIEW —

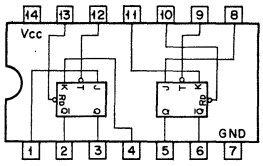

INPUTS				OUT
RD	T	J	K	Qn+1
0	X	X	X	0
1	↓	0	0	Qn
1	↓	0	1	0
1	↓	1	0	1
1	↓	1	1	$\overline{Qn}$
1	1	X	X	Qn

0;LOW LEVEL
1;HIGH LEVEL
X;DON'T CARE

SN74S112N (TI)
SN74LS112AN (TI)

TTL J-K FLIP-FLOP WITH DIRECT SET/RESET
—TOP VIEW—

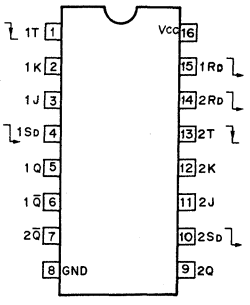

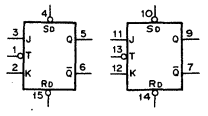

INPUTS					OUTPUTS	
SD	RD	T	J	K	Qn+1	$\overline{Qn+1}$
0	1	X	X	X	1	0
1	0	X	X	X	0	1
0	0	X	X	X	1*	1*
1	1	↓	0	0	Qn	$\overline{Qn}$
			0	1	0	1
			1	0	1	0
			1	1	$\overline{Qn}$	Qn
1	1	1	X	X	Qn	$\overline{Qn}$

0;LOW LEVEL X;DON'T CARE
1;HIGH LEVEL *;NONSTABLE

SN74120N (TI)

TTL PULSE SYNCHRONIZER/DRIVER
— TOP VIEW —

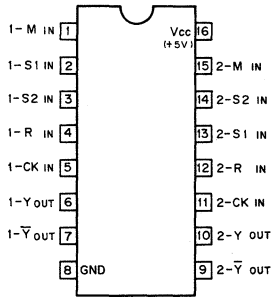

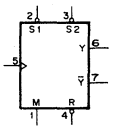

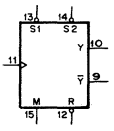

INPUT M	OUTPUT MODE
0	TRAIN OF PULSES
1	SINGLE PULSE

S1, S2 ; START COMMAND INPUTS
R ; STOP COMMAND INPUT
M ; MODE CONTROL INPUT
Y, $\overline{Y}$; SYNCHRONIZED PULSE OUTPUT

INPUTS			FUNCTION
R	S1	S2	
X	0	X	PASS OUTPUT PULSES
X	X	0	PASS OUTPUT PULSES
0	1	1	INHIBIT OUTPUT PULSES
1	↓	1	START OUTPUT PULSES
1	1	↓	START OUTPUT PULSES
↑	1	1	STOP OUTPUT PULSES
1	1	1	CONTINUE

0;LOW LEVEL
1;HIGH LEVEL
X;DON'T CARE

SN74123N (TI)
SN74L123N (TI)
SN74LS123N (TI)
SN74LS123NS(TI)
HD74LS123P (HITACHI)

TTL RETRIGGERABLE MONOSTABLE MULTIVIBRATOR WITH DIRECT RESET

—TOP VIEW—

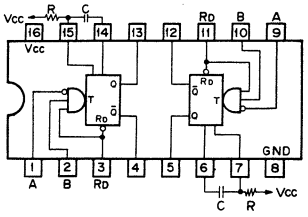

INPUTS			OUTPUTS	
Rd	A	B	Q	$\overline{Q}$
0	X	X	0	1
X	1	X	0	1
X	X	1	0	1
1	0	↓	⊓	⊔
1	↓	1	⊓	⊔
↓	0	1	⊓	⊔

0; LOW LEVEL
1; HIGH LEVEL
X; DON'T CARE

OUTPUT PULSE WIDTH

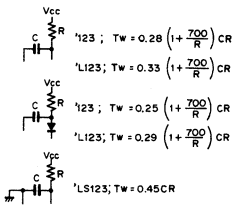

SN74125N
SN74LS125AN

TTL BUS BUFFER GATES WITH 3-STATE OUTPUT

—TOP VIEW—

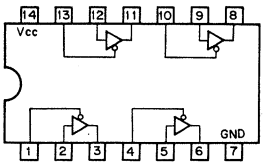

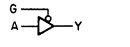

G	A	Y
0	0	0
0	1	1
1	X	HI-Z

0; LOW LEVEL X; DON'T CARE
1; HIGH LEVEL HI-Z; HIGH IMPEDANCE

SN74LS126AN (TI)

TTL BUS BUFFER GATE WITH 3-STATE OUTPUT

—TOP VIEW—

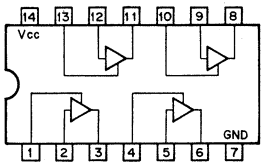

G	A	Y	
1	1	1	0; LOW LEVEL
1	0	0	1; HIGH LEVEL
0	X	HI-Z	X; DON'T CARE
			HI-Z; HIGH IMPEDANCE

SN74128N (TI)

TTL 50-OHM LINE DRIVER

—TOP VIEW—

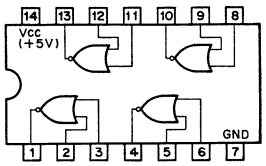

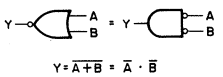

$Y = \overline{A+B} = \overline{A} \cdot \overline{B}$

SN74S138N (TI)
SN74LS138N (TI)
HD74LS138P (HITACHI)
MB74LS138 (FUJITSU)
M74LS138P (MITSUBISHI)

TTL 3-TO-8-LINE DECODER/DEMULTIPLEXER

—TOP VIEW—

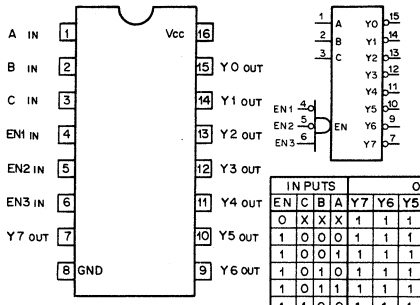

INPUTS				OUTPUTS							
EN	C	B	A	Y7	Y6	Y5	Y4	Y3	Y2	Y1	Y0
0	X	X	X	1	1	1	1	1	1	1	1
1	0	0	0	1	1	1	1	1	1	1	0
1	0	0	1	1	1	1	1	1	1	0	1
1	0	1	0	1	1	1	1	1	0	1	1
1	0	1	1	1	1	1	1	0	1	1	1
1	1	0	0	1	1	1	0	1	1	1	1
1	1	0	1	1	1	0	1	1	1	1	1
1	1	1	0	1	0	1	1	1	1	1	1
1	1	1	1	0	1	1	1	1	1	1	1

$EN = \overline{EN1} \cdot \overline{EN2} \cdot EN3$

0; LOW LEVEL
1; HIGH LEVEL
X; DON'T CARE

SN74S139N (TI)
SN74LS139N (TI)

TTL 2-TO-4-LINE DECODER/DEMULTIPLEXER

—TOP VIEW—

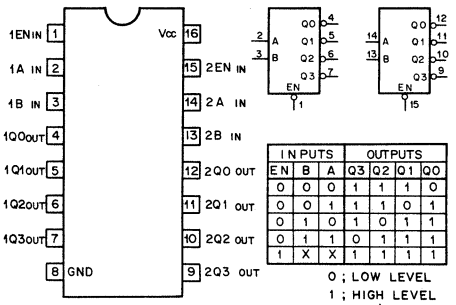

INPUTS			OUTPUTS			
EN	B	A	Q3	Q2	Q1	Q0
0	0	0	1	1	1	0
0	0	1	1	1	0	1
0	1	0	1	0	1	1
0	1	1	0	1	1	1
1	X	X	1	1	1	1

0; LOW LEVEL
1; HIGH LEVEL
X; DON'T CARE

SN74148N (TI)
SN74LS148N (TI)

TTL 8-TO-3-LINE PRIORITY ENCODER

—TOP VIEW—

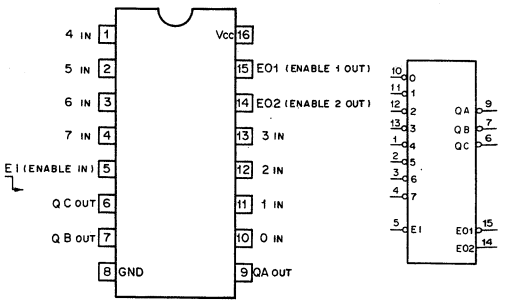

INPUTS									OUTPUTS				
EI	7	6	5	4	3	2	1	0	QC	QB	QA	EO1	EO2
1	X	X	X	X	X	X	X	X	1	1	1	1	1
0	1	1	1	1	1	1	1	1	1	1	1	0	1
0	1	1	1	1	1	1	1	0	1	1	1	1	0
0	1	1	1	1	1	1	0	X	1	1	0	1	0
0	1	1	1	1	1	0	X	X	1	0	1	1	0
0	1	1	1	1	0	X	X	X	1	0	0	1	0
0	1	1	1	0	X	X	X	X	0	1	1	1	0
0	1	1	0	X	X	X	X	X	0	1	0	1	0
0	1	0	X	X	X	X	X	X	0	0	1	1	0
0	0	X	X	X	X	X	X	X	0	0	0	1	0

0; LOW LEVEL 1; HIGH LEVEL X; DON'T CARE

SN74151AN (TI)
SN74S151N (TI)
SN74LS151N (TI)
TTL 8-LINE-TO-1-LINE DATA SELECTOR/MULTIPLEXER
— TOP VIEW —

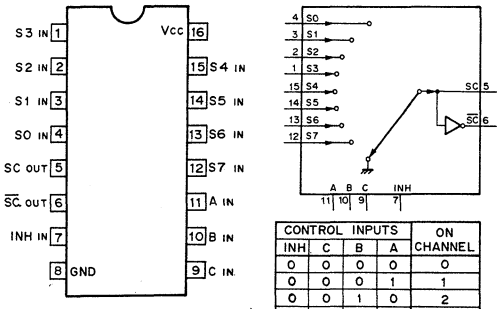

CONTROL INPUTS				ON CHANNEL
INH	C	B	A	
0	0	0	0	0
0	0	0	1	1
0	0	1	0	2
0	0	1	1	3
0	1	0	0	4
0	1	0	1	5
0	1	1	0	6
0	1	1	1	7
1	X	X	X	GND

0 ; LOW LEVEL
1 ; HIGH LEVEL
X ; DON'T CARE

SN74153N (TI)
SN74L153N (TI)
SN74LS153N (TI)
SN74S153N (TI)
HD74LS153P (HITACHI)
M74LS153P (MITSUBISHI)
MB74LS153 (FUJITSU)
TTL 4-LINE-TO-1-LINE DATA SELECTOR/MULTIPLEXER
— TOP VIEW —

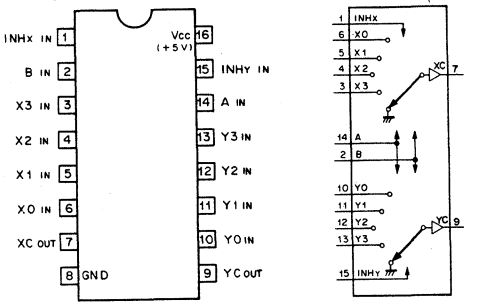

CONTROL IN			ON CHANNEL
INH	B	A	
0	0	0	0
0	0	1	1
0	1	0	2
0	1	1	3
1	X	X	GND

0 ; LOW LEVEL
1 ; HIGH LEVEL
X ; DON'T CARE

SN74157N (TI)
SN74L157N (TI)
SN74S157N (TI)
SN74LS157N (TI)
HD74LS157P (HITACHI)
MB74LS157 (FUJITSU)
M74LS157P (MITSUBISHI)
TTL 2-LINE-TO-1-LINE DATA SELECTOR/MULTIPLEXER
— TOP VIEW —

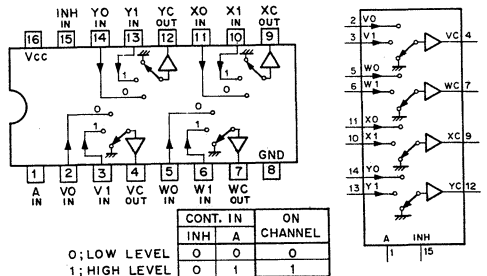

CONT. IN		ON CHANNEL
INH	A	
0	0	0
0	1	1
1	X	GND

0 ; LOW LEVEL
1 ; HIGH LEVEL
X ; DON'T CARE

SN74161N (TI)
SN74LS161AN (TI)
HD74LS161P (HITACHI)
TTL PRESETTABLE SYNCHRONOUS 4-BIT BINARY COUNTER
— TOP VIEW —

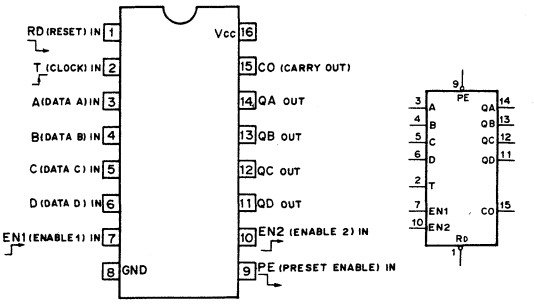

MODE SELECTION

CONTROL INPUTS				MODE
Rd	PE	EN1	EN2	
0	X	X	X	RESET (ASYNCHRONOUS)
1	0	X	X	PRESET (SYNCHRONOUS)
1	1	0	X	NO COUNT
1	1	X	0	NO COUNT
1	1	1	1	COUNT

0 ; LOW LEVEL
1 ; HIGH LEVEL
X ; DON'T CARE

CARRY OUTPUT "CO"

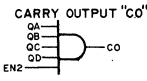

CO IS HIGH WHEN EN2 INPUT IS HIGH AND COUNT IS "15".

COUNT SEQUENCE

COUNT	OUTPUTS			
	QD	QC	QB	QA
0	0	0	0	0
1	0	0	0	1
2	0	0	1	0
3	0	0	1	1
4	0	1	0	0
5	0	1	0	1
6	0	1	1	0
7	0	1	1	1
8	1	0	0	0
9	1	0	0	1
10	1	0	1	0
11	1	0	1	1
12	1	1	0	0
13	1	1	0	1
14	1	1	1	0
15	1	1	1	1

SN74162N (TI)
SN74LS162AN (TI)
SN74S162N (TI)
TTL PRESETTABLE SYNCHRONOUS 4-BIT DECADE COUNTER
— TOP VIEW —

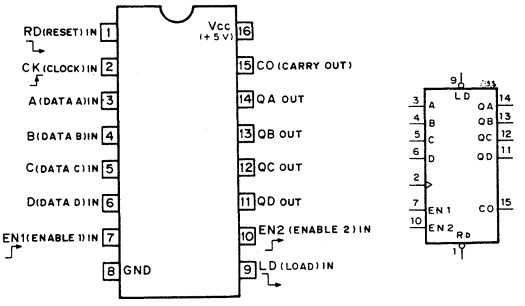

MODE SELECTION

CONTROL INPUTS				MODE
Rd	LD	EN1	EN2	
0	X	X	X	RESET (ASYNCHRONOUS)
1	0	X	X	PRESET (SYNCHRONOUS)
1	1	0	X	NO COUNT
1	1	X	0	NO COUNT
1	1	1	1	COUNT

CARRY OUTPUT "CO"

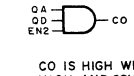

CO IS HIGH WHEN EN2 INPUT IS HIGH AND COUNT IS "9".

COUNT SEQUENCE

COUNT	OUTPUTS				
	QD	QC	QB	QA	CO
0	0	0	0	0	0
1	0	0	0	1	0
2	0	0	1	0	0
3	0	0	1	1	0
4	0	1	0	0	0
5	0	1	0	1	0
6	0	1	1	0	0
7	0	1	1	1	0
8	1	0	0	0	0
9	1	0	0	1	1

0 ; LOW LEVEL
1 ; HIGH LEVEL
X ; DON'T CARE

SN74163N (TI)
SN74S163N (TI)
SN74LS163AN (TI)
HD74LS163P (HITACHI)
TTL PRESETTABLE SYNCHRONOUS 4-BIT BINARY COUNTER
– TOP VIEW –

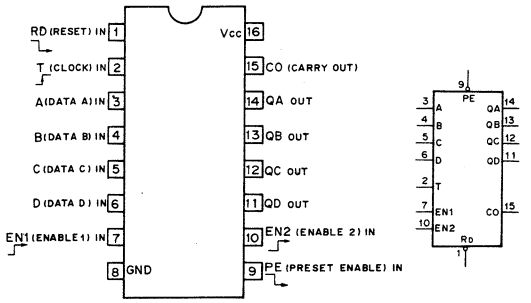

MODE SELECTION

CONTROL INPUTS				MODE
Rd	PE	EN1	EN2	
0	X	X	X	RESET (SYNCHRONOUS)
1	0	X	X	PRESET (SYNCHRONOUS)
1	1	0	X	NO COUNT
1	1	X	0	NO COUNT
1	1	1	1	COUNT

0; LOW LEVEL
1; HIGH LEVEL
X; DON'T CARE

COUNT SEQUENCE

COUNT	OUTPUTS			
	QD	QC	QB	QA
0	0	0	0	0
1	0	0	0	1
2	0	0	1	0
3	0	0	1	1
4	0	1	0	0
5	0	1	0	1
6	0	1	1	0
7	0	1	1	1
8	1	0	0	0
9	1	0	0	1
10	1	0	1	0
11	1	0	1	1
12	1	1	0	0
13	1	1	0	1
14	1	1	1	0
15	1	1	1	1

CARRY OUTPUT "CO"

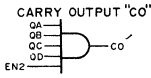

CO IS HIGH WHEN EN2 INPUT IS HIGH AND COUNT IS "15".

SN74S169N (TI)
TTL PRESETTABLE SYNCHRONOUS 4-BIT BINARY UP/DOWN COUNTER
— TOP VIEW —

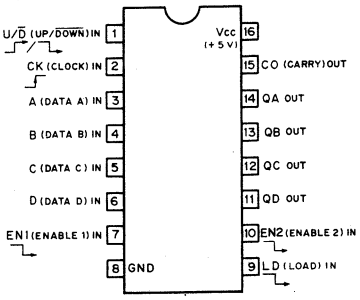

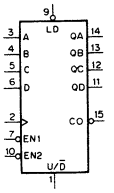

MODE SELECTION

INPUTS				MODE
LD	EN1	EN2	U/D	
0	X	X	X	PRESET
X	1	X	X	NO COUNT
X	X	1	X	NO COUNT
1	0	0	1	UP COUNT
1	0	0	0	DOWN COUNT

0; LOW LEVEL
1; HIGH LEVEL
X; DON'T CARE

COUNT SEQUENCE

COUNT	OUTPUTS			
	QD	QC	QB	QA
0	0	0	0	0
1	0	0	0	1
2	0	0	1	0
3	0	0	1	1
4	0	1	0	0
5	0	1	0	1
6	0	1	1	0
7	0	1	1	1
8	1	0	0	0
9	1	0	0	1
10	1	0	1	0
11	1	0	1	1
12	1	1	0	0
13	1	1	0	1
14	1	1	1	0
15	1	1	1	1

UP COUNT
DOWN COUNT

CARRY OUTPUTS "CO"
AT U/D = 1

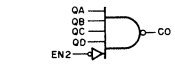

AT U/D = 0

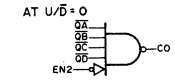

SN74174N (TI)
SN74S174N (TI)
SN74LS174N (TI)
HD74LS174P (HITACHI)
MB74LS174 (FUJITSU)
M74LS174P (MITSUBISHI)
TTL D-TYPE FLIP-FLOP WITH DIRECT RESET
— TOP VIEW —

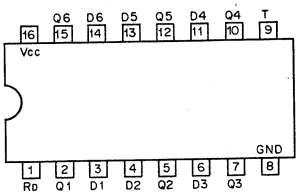

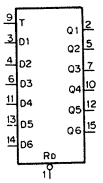

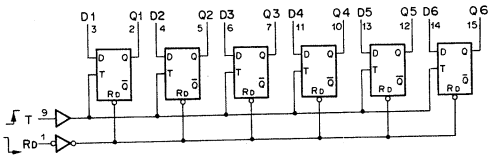

EACH FLIP-FLOP

INPUTS			OUT
Rd	T	D	Q
0	X	X	0
1	↓	0	0
1	↓	1	1
1	0	X	Q0

0; LOW LEVEL
1; HIGH LEVEL
X; DON'T CARE

SN74164N (TI)
SN74L164N (TI)
SN74LS164N (TI)
HD74LS164P (HITACHI)
TTL 8-BIT PARALLEL-OUT SERIAL SHIFT REGISTER
— TOP VIEW —

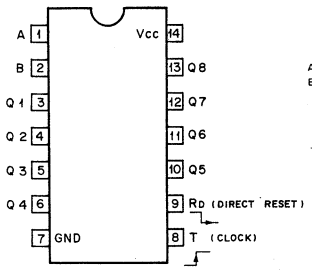

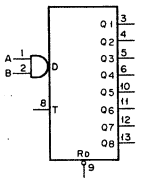

INPUTS				OUTPUTS			
Rd	T	A	B	Q1	Q2	----	Q8
0	X	X	X	0	0	0	0
1	0	X	X	Q1o	Q2o	----	Q8o
1	↓	1	1	1	Q1n	----	Q7n
1	↓	0	X	0	Q1n	----	Q7n
1	↓	X	0	0	Q1n	----	Q7n

0; LOW LEVEL
1; HIGH LEVEL
X; DON'T CARE

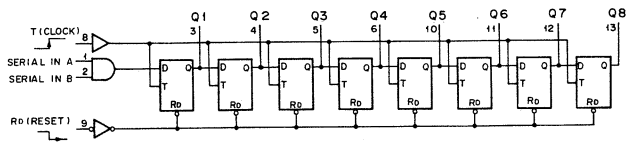

SN74175N (TI)
SN74S175N (TI)
SN74LS175N (TI)
HD74LS175P (HITACHI)
TTL D-TYPE FLIP-FLOP WITH CLEAR
— TOP VIEW —

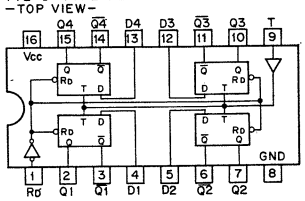

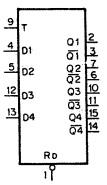

Rd	T	D	Q	Q̄
0	X	X	0	1
1	↓	1	1	0
1	↓	0	0	1
1	0	X	Qo	Q̄o

0; LOW LEVEL
1; HIGH LEVEL
X; DON'T CARE

SN74S189AN (TI)
SN74S189N (TI)
TTL 64-BIT RAM WITH 3-STATE OUTPUT
— TOP VIEW —

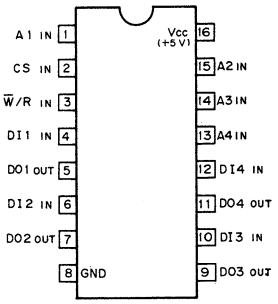

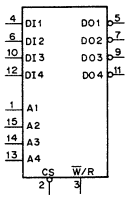

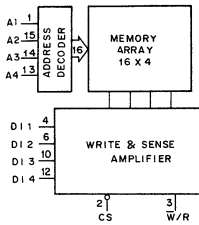

DI1 to DI4 ; DATA INPUTS

DO1 to DO4 ; DATA OUTPUTS

A1 to A3 ; ADDRESS INPUT

CS ; CHIP SELECT INPUT

W/R ; WRITE/READ ENABLE IN

CS	W/R	FUNCTION	OUTPUTS
0	0	WRITE	HIGH IMPEDANCE
0	1	READ	COMPLEMENT OF DATA ENTERED
1	X	INHIBIT	HIGH IMPEDANCE

0 ; LOW LEVEL
1 ; HIGH LEVEL
X ; DON'T CARE

SN74193N (TI)
SN74L193N (TI)
SN74LS193N (TI)
MB74LS193 (FUJITSU)
TTL PRESETTABLE SYNCHRONOUS 4-BIT UP/DOWN COUNTER
— TOP VIEW —

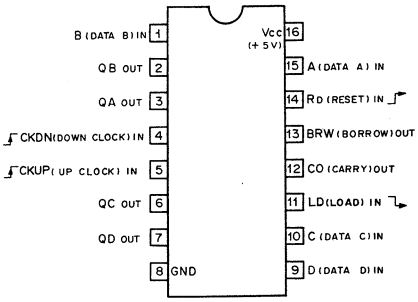

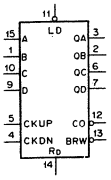

CONTROL INPUTS				MODE
RD	LD	CKUP	CKDN	
1	X	X	X	RESET TO ZERO
0	0	X	X	PRESET
0	1	↑	1	UP COUNT
0	1	1	↑	DOWN COUNT
0	1	1	1	NO COUNT

COUNT	OUTPUTS			
	QD	QC	QB	QA
0	0	0	0	0
1	0	0	0	1
2	0	0	1	0
3	0	0	1	1
4	0	1	0	0
5	0	1	0	1
6	0	1	1	0
7	0	1	1	1
8	1	0	0	0
9	1	0	0	1
10	1	0	1	0
11	1	0	1	1
12	1	1	0	0
13	1	1	0	1
14	1	1	1	0
15	1	1	1	1

UP COUNT — DOWN COUNT

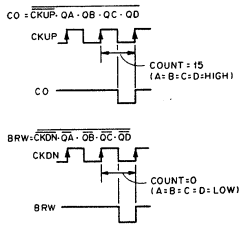

0 ; LOW LEVEL
1 ; HIGH LEVEL
X ; DON'T CARE

SN74191N (TI)
SN74LS191N (TI)
TTL PRESETTABLE SYNCHRONOUS 4-BIT BINARY UP/DOWN COUNTER
— TOP VIEW —

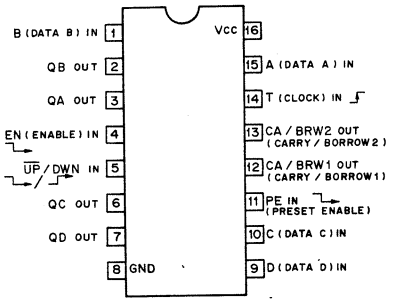

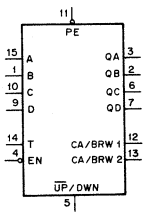

MODE SELECTION

CONTROL INPUTS			MODE
PE	EN	UP/DWN	
0	X	X	PRESET (ASYNCHRONOUS)
1	1	X	NO COUNT
1	0	0	UP COUNT
1	0	1	DOWN COUNT

0 ; LOW LEVEL
1 ; HIGH LEVEL
X ; DON'T CARE.

COUNT SEQUENCE

COUNT	OUTPUTS			
	QD	QC	QB	QA
0	0	0	0	0
1	0	0	0	1
2	0	0	1	0
3	0	0	1	1
4	0	1	0	0
5	0	1	0	1
6	0	1	1	0
7	0	1	1	1
8	1	0	0	0
9	1	0	0	1
10	1	0	1	0
11	1	0	1	1
12	1	1	0	0
13	1	1	0	1
14	1	1	1	0
15	1	1	1	1

UP COUNT — DOWN COUNT

CA/BRW OUTPUTS

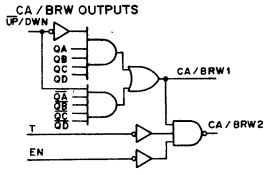

CA/BRW1 OUTPUT IS HIGH WHEN COUNT IS "15" AT UP-COUNT OR WHEN COUNT IS "0" AT DOWN COUNT.

CA/BRW2 OUTPUT IS LOW WHEN BOTH THE CLOCK AND EN INPUTS ARE LOW AND CA/BRW1 OUTPUT IS HIGH.

SN74LS195AN (TI)
SN74S195N (TI)
TTL 4-BIT PARALLEL-ACCESS SHIFT REGISTER
— TOP VIEW —

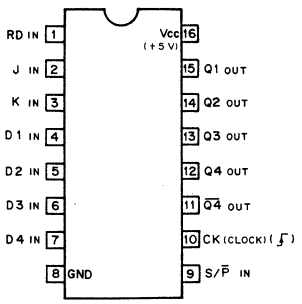

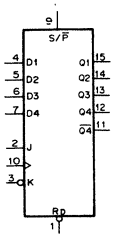

INPUTS										OUTPUTS				
RD	S/P	CK	J	K	D1	D2	D3	D4	Q1	Q2	Q3	Q4	Q4
0	X	X	X	X	X	X	X	X	0	0	0	0	1
1	0	↑	X	X	d1	d2	d3	d4	d1	d2	d3	d4	d4
1	1	0	X	X	X	X	X	X	Q1o	Q2o	Q3o	Q4o	Q4o
1	1	↑	0	1	X	X	X	X	Q1o	Q1n	Q2n	Q3n	Q3n
1	1	↑	0	0	X	X	X	X	0	Q1n	Q2n	Q3n	Q3n
1	1	↑	1	1	X	X	X	X	1	Q1n	Q2n	Q3n	Q3n
1	1	↑	1	0	X	X	X	X	Q1o	Q1n	Q2n	Q3n	Q3n

0 ; LOW LEVEL
1 ; HIGH LEVEL
X ; DON'T CARE

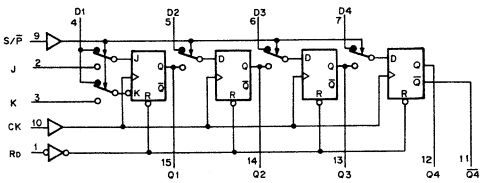

SN74LS197N (TI)
TTL PRESETTABLE DIVIDE-BY-2 AND DIVIDE-BY-8 (4-BIT BINARY) COUNTER
— TOP VIEW —

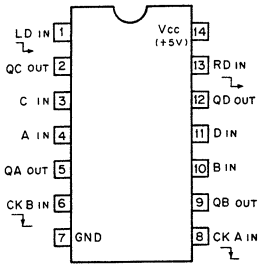

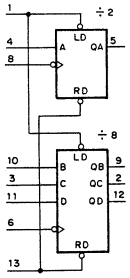

COUNT SEQUENCE

÷2 SECTION

COUNT	RD	LD	QA
0	1	1	0
1	1	1	1
X	1	0	SET TO A
0	0	X	0

÷8 SECTION

COUNT	RD	LD	QD	QC	QB
0	1	1	0	0	0
1	1	1	0	0	1
2	1	1	0	1	0
3	1	1	0	1	1
4	1	1	1	0	0
5	1	1	1	0	1
6	1	1	1	1	0
7	1	1	1	1	1
X	1	0	D	C	B
0	0	X	0	0	0

0 ; LOW LEVEL
1 ; HIGH LEVEL
X ; DON'T CARE

SN74221N (TI)
SN74LS221N (TI)
HD74LS221P (HITACHI)
TTL MONOSTABLE MULTIVIBRATOR WITH SCHMITT TRIGGER INPUT
— TOP VIEW —

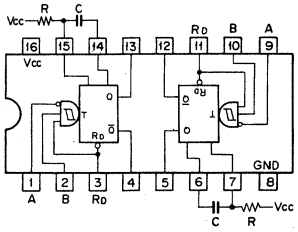

INPUTS			OUTPUTS	
RD	A	B	Q	$\overline{Q}$
0	X	X	0	1
X	1	X	0	1
X	X	0	0	1
1	0	↑	⊓	⊔
1	↓	1	⊓	⊔
↑	0	1	⊓	⊔

0 ; LOW LEVEL
1 ; HIGH LEVEL
X ; DON'T CARE

OUTPUT PULSE WIDTH = 0.7CR

SN74S240N (TI)
SN74LS240N (TI)
HD74LS240P (HITACHI)
TTL 3-STATE SCHMITT TRIGGER INVERTER/LINE DRIVER
— TOP VIEW —

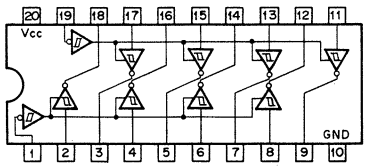

G	A	Y
0	0	1
0	1	0
1	X	HI-Z

0 ; LOW LEVEL
1 ; HIGH LEVEL
X ; DON'T CARE
HI-Z ; HIGH IMPEDANCE

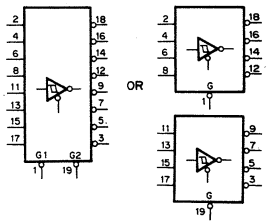

SN74LS241N (TI)
SN74S241N (TI)
HD74LS241P (HITACHI)
TTL 3-STATE SCHMITT TRIGGER BUFFER/LINE DRIVER
— TOP VIEW —

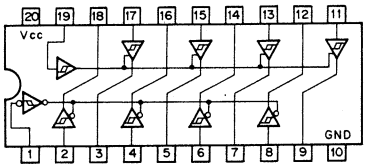

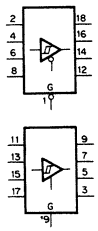

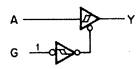

G	A	Y
0	0	0
0	1	1
1	0	HI-Z
1	1	HI-Z

HI-Z ; HIGH IMPEDANCE

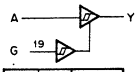

G	A	Y
0	0	HI-Z
0	1	HI-Z
1	0	0
1	1	1

HI-Z ; HIGH IMPEDANCE

SN74LS243N (TI)
TTL BUS TRANSCEIVERS WITH 3-STATE OUTPUT
— TOP VIEW —

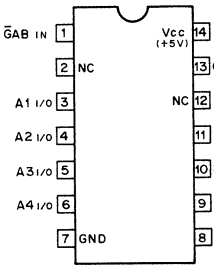

GAB	GBA	OPERATION
0	0	A to B
0	1	DON'T USE
1	0	HI-Z
1	1	B to A

0 ; LOW LEVEL
1 ; HIGH LEVEL
HI-Z ; HIGH IMPEDANCE

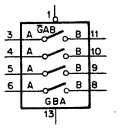

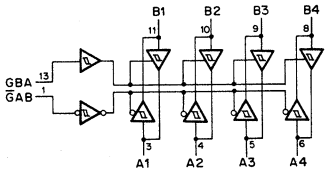

SN74LS244N (TI)
HD74LS244P (HITACHI)
M74LS244P (MITSUBISHI)
TTL 3-STATE SCHMITT TRIGGER BUFFER/DRIVER
—TOP VIEW —

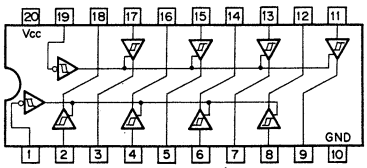

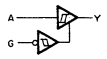

G	A	Y
0	0	0
0	1	1
1	X	HI-Z

0 ; LOW LEVEL
1 ; HIGH LEVEL
X ; DON'T CARE
HI-Z ; HIGH IMPEDANCE

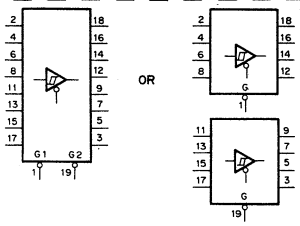

SN74LS245N (TI)

TTL BILATERAL SCHMITT TRIGGER BUS TRANSCEIVERS WITH 3-STATE OUTPUT
— TOP VIEW —

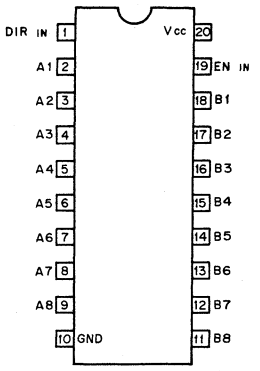

EN	DIR	OPERATION
0	0	B to A
0	1	A to B
1	X	HI-Z

0 ; LOW LEVEL
1 ; HIGH LEVEL
X ; DON'T CARE.

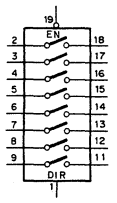

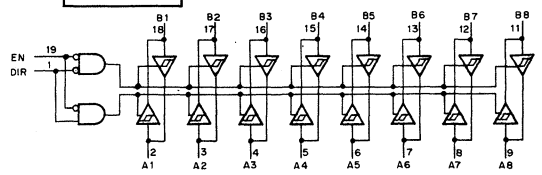

SN74273N (TI)
SN74LS273N (TI)
M74LS273P (MITSUBISHI)

TTL D-TYPE FLIP-FLOP WITH DIRECT RESET
— TOP VIEW —

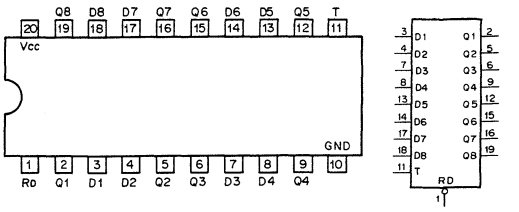

EACH FLIP-FLOP

INPUTS			OUT
RD	T	D	Q
0	X	X	0
1	↑	0	0
1	↑	1	1
1	0	X	Q0

0 ; LOW LEVEL
1 ; HIGH LEVEL
X ; DON'T CARE

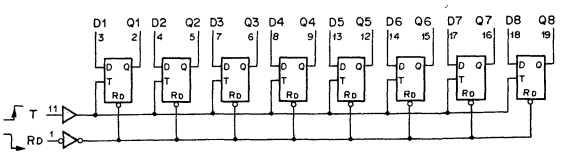

SN74LS257AN (TI)

TTL 2-LINE-TO-1-LINE DATA SELECTOR/MULTIPLEXER
— TOP VIEW —

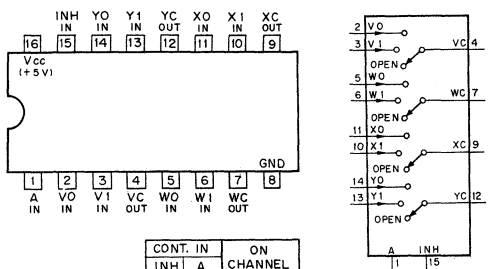

CONT. IN		ON CHANNEL
INH	A	
0	0	0
0	1	1
1	X	OPEN

0 ; LOW LEVEL
1 ; HIGH LEVEL
X ; DON'T CARE

SN74LS280N (TI)

TTL 9-BIT ODD/EVEN PARITY GENERATOR/CHECKER
— TOP VIEW —

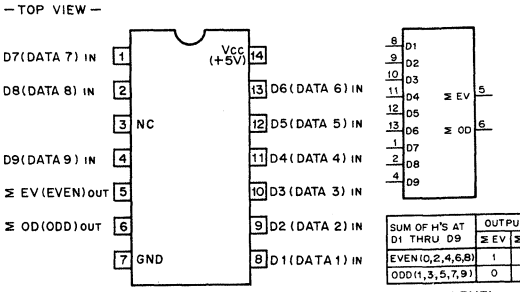

SUM OF H'S AT D1 THRU D9	OUTPUTS	
	Σ EV	Σ OD
EVEN(0,2,4,6,8)	1	0
ODD(1,3,5,7,9)	0	1

0 ; LOW LEVEL
1 ; HIGH LEVEL

SN74265N (TI)

TTL COMPLEMENTARY-OUTPUT ELEMENT
— TOP VIEW —

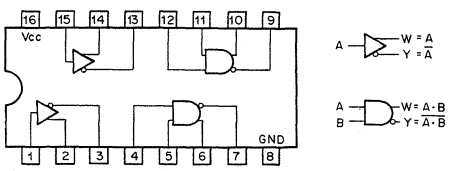

SN74LS365AN (TI)
SN74365AN (TI)

TTL 3-STATE BUS DRIVER
—TOP VIEW—

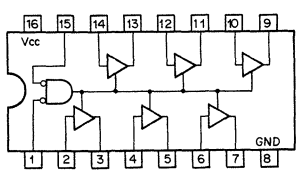

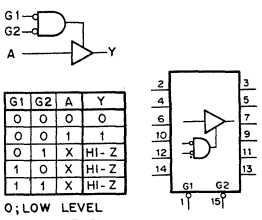

G1	G2	A	Y
0	0	0	0
0	0	1	1
0	1	X	HI-Z
1	0	X	HI-Z
1	1	X	HI-Z

0 ; LOW LEVEL
1 ; HIGH LEVEL
X ; DON'T CARE
HI-Z ; HIGH IMPEDANCE

SN74367AN (TI)
SN74LS367AN (TI)
TTL BUS DRIVER WITH 3-STATE OUTPUTS
— TOP VIEW —

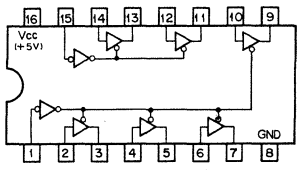

G	A	Y
0	0	0
0	1	1
1	X	HI-Z

0 ; LOW LEVEL
1 ; HIGH LEVEL
X ; DON'T CARE
HI-Z ; HIGH IMPEDANCE

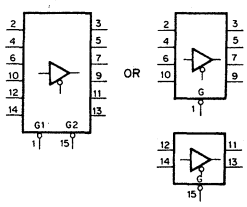

SN74368AN (TI)
SN74LS368AN (TI)
TTL BUS INVERTER WITH 3-STATE OUTPUTS
— TOP VIEW —

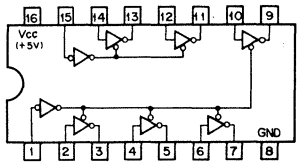

G	A	Y
0	0	1
0	1	0
1	X	HI-Z

0 ; LOW LEVEL
1 ; HIGH LEVEL
X ; DON'T CARE
HI-Z ; HIGH IMPEDANCE

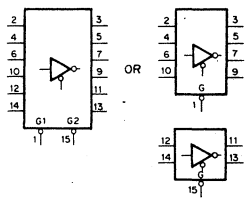

SN74LS373N (TI)
SN74S373N (TI)
TTL 3-STATE OUTPUTS OCTAL LATCHES
— TOP VIEW —

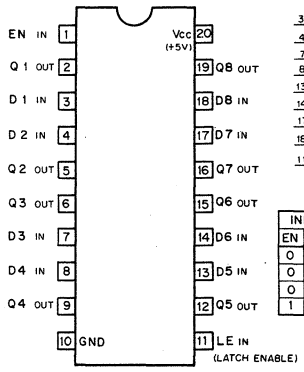

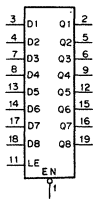

INPUTS			OUT
EN	D	LE	Q
0	1	1	1
0	0	1	0
0	X	0	Qo
1	X	X	HI-Z

HI-Z ; HIGH IMPEDANCE
0 ; LOW LEVEL
1 ; HIGH LEVEL
X ; DON'T CARE

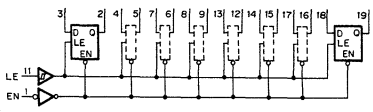

SN74LS374N (TI)
SN74S374N (TI)
TTL 3-STATE OUTPUTS OCTAL D-TYPE FLIP-FLOP
– TOP VIEW–

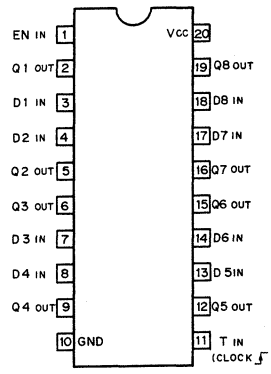

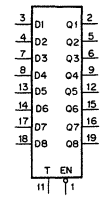

INPUTS			OUT
EN	D	T	Q
0	1	↓	1
0	0	↓	0
0	X	0	Qo
1	X	X	HI-Z

0 ; LOW LEVEL
1 ; HIGH LEVEL
X ; DON'T CARE
HI-Z ; HIGH IMPEDANCE

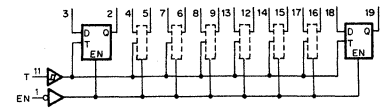

SN74LS375N (TI)
TTL BISTABLE LATCH
— TOP VIEW —

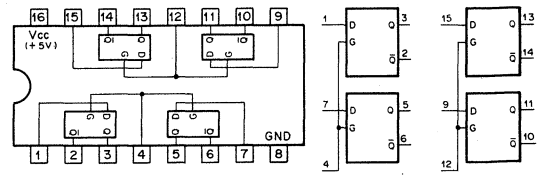

D	G	Q	$\bar{Q}$
0	1	0	1
1	1	1	0
X	0	Qo	$\bar{Q}o$

0 ; LOW LEVEL
1 ; HIGH LEVEL
X ; DON'T CARE

SN74390N (TI)
SN74LS390N (TI)
TTL DIVIDE-BY-2 AND DIVIDE-BY-5 COUNTER
— TOP VIEW —

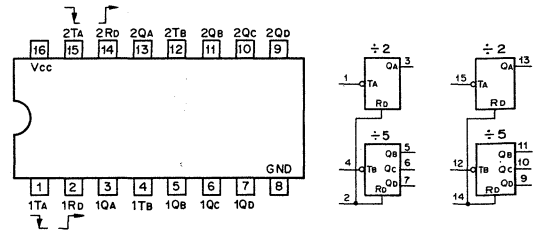

COUNT SEQUENCE
÷2 SECTION

COUNT	QA
0	0
1	1

÷5 SECTION

COUNT	QD	QC	QB
0	0	0	0
1	0	0	1
2	0	1	0
3	0	1	1
4	1	0	0

RESET/COUNT FUNCTION

RD	QD	QC	QB	QA
1	0	0	0	0
0	COUNT			

0 ; LOW LEVEL
1 ; HIGH LEVEL

SN74393N (TI)
SN74LS393N (TI)
TTL 4-BIT BINARY COUNTER
— TOP VIEW —

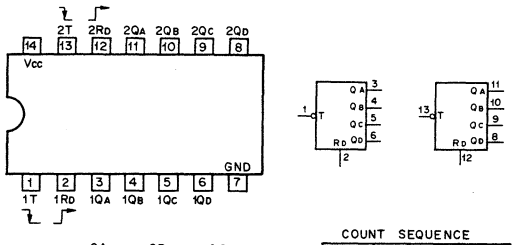

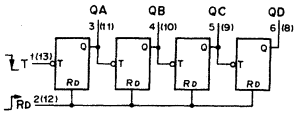

COUNT SEQUENCE

COUNT	QD	QC	QB	QA
0	0	0	0	0
1	0	0	0	1
2	0	0	1	0
3	0	0	1	1
4	0	1	0	0
5	0	1	0	1
6	0	1	1	0
7	0	1	1	1
8	1	0	0	0
9	1	0	0	1
10	1	0	1	0
11	1	0	1	1
12	1	1	0	0
13	1	1	0	1
14	1	1	1	0
15	1	1	1	1

RESET/COUNT FUNCTION

RD	QD	QC	QB	QA
1	0	0	0	0
0	COUNT			

0; LOW LEVEL
1; HIGH LEVEL

SN74LS624N (TI)
TTL VOLTAGE CONTROLLED OSCILLATOR
— TOP VIEW —

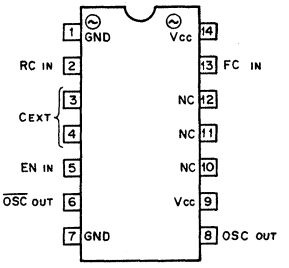

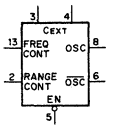

EN	OSC	$\overline{OSC}$
0	ENABLE	ENABLE
1	LOW	HIGH

0; LOW LEVEL
1; HIGH LEVEL

SN74LS669N (TI)
TTL PRESETTABLE SYNCHRONOUS 4-BIT BINARY UP/DOWN COUNTER
— TOP VIEW —

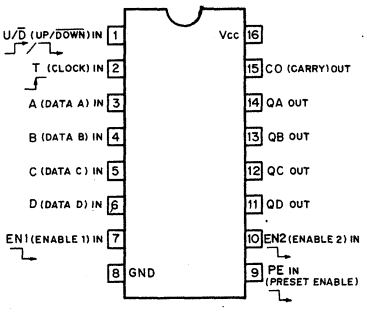

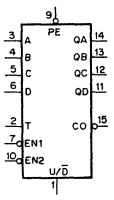

MODE SELECTION

INPUTS				MODE
PE	EN1	EN2	U/$\overline{D}$	
0	X	X	X	PRESET
X	1	X	X	NO COUNT
X	X	1	X	NO COUNT
1	0	0	1	UP COUNT
1	0	0	0	DOWN COUNT

0; LOW LEVEL
1; HIGH LEVEL
X; DON'T CARE

COUNT SEQUENCE

COUNT	OUTPUTS			
	QD	QC	QB	QA
0	0	0	0	0
1	0	0	0	1
2	0	0	1	0
3	0	0	1	1
4	0	1	0	0
5	0	1	0	1
6	0	1	1	0
7	0	1	1	1
8	1	0	0	0
9	1	0	0	1
10	1	0	1	0
11	1	0	1	1
12	1	1	0	0
13	1	1	0	1
14	1	1	1	0
15	1	1	1	1

UP COUNT
DOWN COUNT

CARRY OUTPUTS "CO"
AT U/$\overline{D}$ = 1

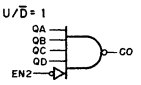

AT U/$\overline{D}$ = 0

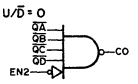

SN74LS670N(TI)
TTL 4-BY-4 REGISTOR FILES WITH 3-STATE OUTPUT
— TOP VIEW —

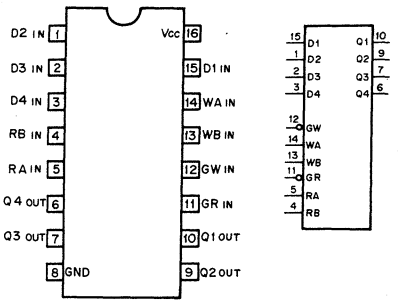

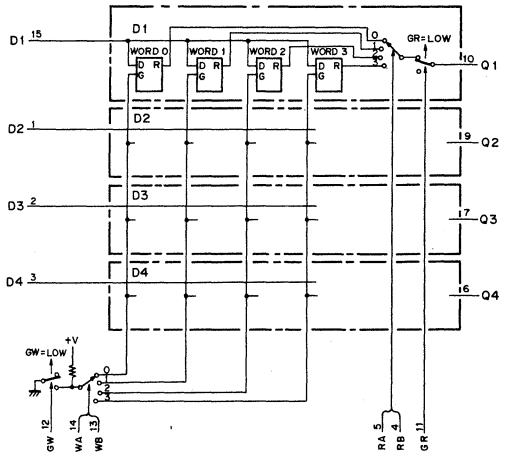

SN75107AN (TI)
SN75107BN (TI)
HD75107A (HITACHI)
HD75107AP (HITACHI)
LINE RECEIVER

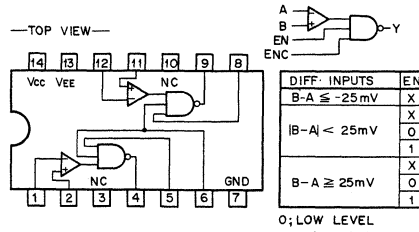

DIFF. INPUTS	EN	ENC	Y
B-A ≦ -25mV	X	X	1
	X	0	1
|B-A| < 25mV	0	X	1
	1	1	N:D
B-A ≧ 25mV	X	0	1
	0	X	1
	1	1	0

0; LOW LEVEL
1; HIGH LEVEL
X; DON'T CARE
ND; NOT DEFINED

SN75207BN (TI)
BIPOLAR LINE RECEIVER (TTL COMPATIBLE)
— TOP VIEW —

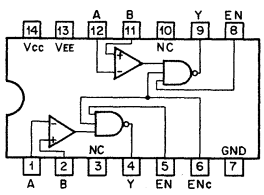

INPUTS			OUT
B-A	EN	ENc	Y
B-A ≧ 10mV	X	0	1
	0	X	1
	1	1	0
|B-A| < 10mV	X	0	1
	0	X	1
	1	1	?
B-A ≦ -10mV	X	X	1

0; LOW LEVEL
1; HIGH LEVEL
X; DON'T CARE

SN75452BP (TI)
HD75452P (HITACHI)
TTL PERIPHERAL POSITIVE-NAND DRIVER
WITH OPEN-COLLECTOR
— TOP VIEW —

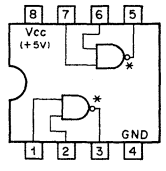

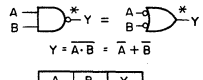

A	B	Y
0	0	1
0	1	1
1	0	1
1	1	0

0; LOW LEVEL
1; HIGH LEVEL

TC4001BP (TOSHIBA)
TC4001UBP (TOSHIBA)
μPD4001BC (NEC)
MB84001B (FUJITSU)
MSM4001 (OKI)
HD14001BP (HITACHI)
MC14001BCP (MOTOROLA)
MC14001UBCP (MOTOROLA)

C-MOS 2-INPUT NOR GATE
— TOP VIEW —

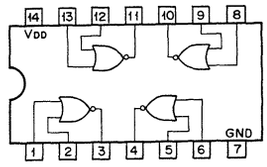

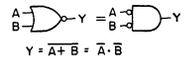

A	B	Y
0	0	1
0	1	0
1	0	0
1	1	0

0; LOW LEVEL
1; HIGH LEVEL

TC4008BP (TOSHIBA)
MC14008BCP (MOTOROLA)

C-MOS 4-BIT FULL ADDER
— TOP VIEW —

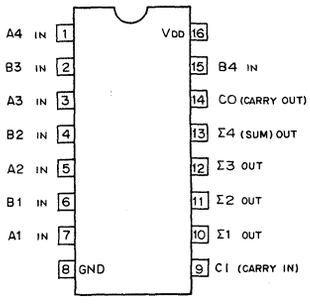

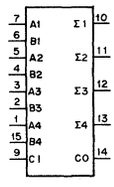

ONE STAGE

INPUTS			OUTPUTS	
CI	B	A	CO	Σ
0	0	0	0	0
0	0	1	0	1
0	1	0	0	1
0	1	1	1	0
1	0	0	0	1
1	0	1	1	0
1	1	0	1	0
1	1	1	1	1

0; LOW LEVEL
1; HIGH LEVEL

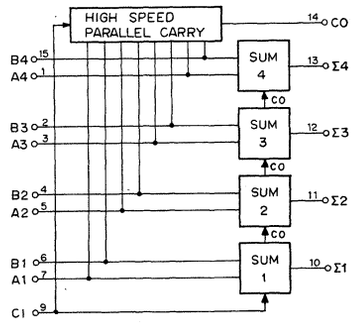

TC4011BP (TOSHIBA)
TC4011UBP (TOSHIBA)
μPD4011BC (NEC)
MSM4011RS (OKI)
MB84011B (FUJITSU)
HD14011BP (HITACHI)
MC14011BCP (MOTOROLA)
MC14011UBCP (MOTOROLA)

C-MOS 2-INPUT NAND GATE
— TOP VIEW —

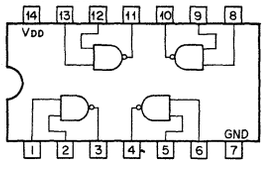

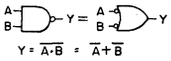

A	B	Y
0	0	1
0	1	1
1	0	1
1	1	0

0:LOW LEVEL
1:HIGH LEVEL

TC4013BP (TOSHIBA)
TC504013BP (TOSHIBA)

C-MOS D-TYPE FLIP FLOP WITH DIRECT SET/RESET
— TOP VIEW —

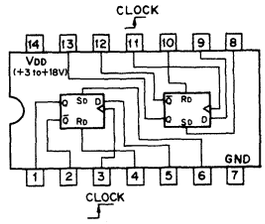

DIRECT R-S FLIP FLOP

Sd	Rd	Q	Q̄
0	0	On	On
0	1	0	1
1	0	1	0
1	1	0	1

D-TYPE FLIP FLOP

CKn	CKn+1
D	Q
0	0
1	1

CLOCK CK;
CKn; BEFORE CLOCK
CKn+1; AFTER CLOCK

0; LOW LEVEL
1; HIGH LEVEL

MB84013B (FUJITSU)
MB84013M (FUJITSU)
μPD4013BC (NEC)
μPD4013C (NEC)
HD14013BP (HITACHI)
MC14013BCP (MOTOROLA)

C-MOS D-TYPE FLIP FLOP WITH DIRECT SET / RESET
-TOP VIEW-

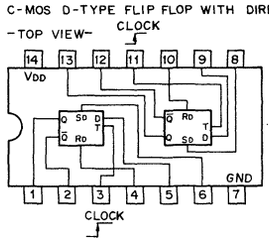

DIRECT R-S FLIP FLOP

Sd	Rd	Q	Q̄
0	0	On	On
0	1	0	1
1	0	1	0
1	1	1	1

D-TYPE FLIP FLOP

tn	tn+1
D	Q
0	0
1	1

CLOCK T;
tn; BEFORE CLOCK
tn+1; AFTER CLOCK

0; LOW LEVEL
1; HIGH LEVEL

TC4015BP (TOSHIBA)
μPD4015C (NEC)
μPD4015BC (NEC)
MC14015BCP (MOTOROLA)

C-MOS DUAL 4-STAGE STATIC SHIFT REGISTER WITH DIRECT RESET
— TOP VIEW —

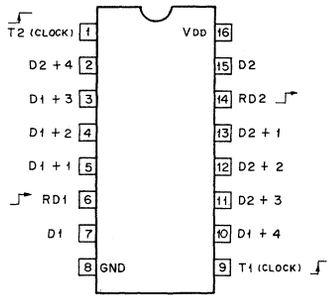

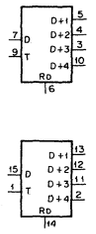

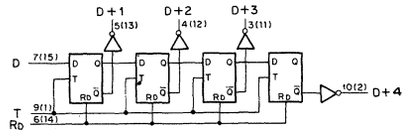

TC4028BP (TOSHIBA)
μPD4028C (NEC)

C-MOS BCD TO DECIMAL DECODER
-TOP VIEW-

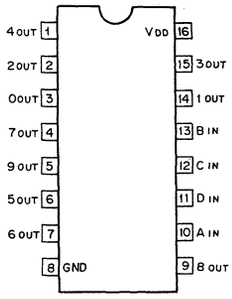

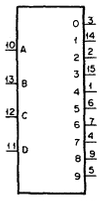

STATE	INPUTS				OUTPUTS									
	D	C	B	A	0	1	2	3	4	5	6	7	8	9
0	0	0	0	0	1	0	0	0	0	0	0	0	0	0
1	0	0	0	1	0	1	0	0	0	0	0	0	0	0
2	0	0	1	0	0	0	1	0	0	0	0	0	0	0
3	0	0	1	1	0	0	0	1	0	0	0	0	0	0
4	0	1	0	0	0	0	0	0	1	0	0	0	0	0
5	0	1	0	1	0	0	0	0	0	1	0	0	0	0
6	0	1	1	0	0	0	0	0	0	0	1	0	0	0
7	0	1	1	1	0	0	0	0	0	0	0	1	0	0
8	1	X	X	0	0	0	0	0	0	0	0	0	1	0
9	1	X	X	1	0	0	0	0	0	0	0	0	0	1

0; LOW LEVEL
1; HIGH LEVEL
X; DON'T CARE

TC4030BP (TOSHIBA)
μPD4030BC (NEC)
μPD4030C (NEC)
MC14507CP (MOTOROLA)
C-MOS EXCLUSIVE OR GATE
— TOP VIEW —

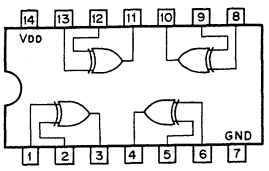

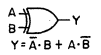

A	B	Y
0	0	0
0	1	1
1	0	1
1	1	0

0; LOW LEVEL
1; HIGH LEVEL

TC4040BP (TOSHIBA)
HD14040BP (HITACHI)
MB84040B (FUJITSU)
μPD4040C (NEC)
C-MOS 12-STAGE RIPPLE CARRY BINARY COUNTER/DRIVER
— TOP VIEW —

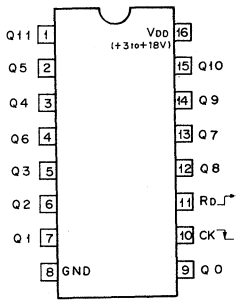

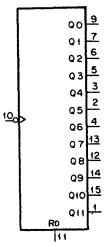

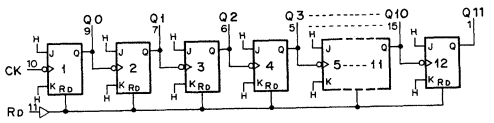

COUNT	Q11	Q10	Q9	Q8	Q7	Q6	Q5	Q4	Q3	Q2	Q1	Q0
0	0	0	0	0	0	0	0	0	0	0	0	0
1	0	0	0	0	0	0	0	0	0	0	0	1
2	0	0	0	0	0	0	0	0	0	0	1	0
3	0	0	0	0	0	0	0	0	0	0	1	1
⋮	⋮	⋮	⋮	⋮	⋮	⋮	⋮	⋮	⋮	⋮	⋮	⋮
4095	1	1	1	1	1	1	1	1	1	1	1	1

RD	Q11 ····· Q0
1	ALL LOW
0	COUNT

0; LOW LEVEL
1; HIGH LEVEL

TC4043BP (TOSHIBA)
MC14043BCP (MOTOROLA)
C-MOS 3-STATE OUTPUT NOR R-S LATCH
— TOP VIEW —

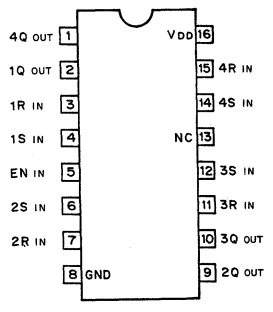

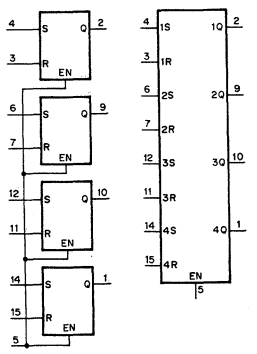

EN	S	R	Q
0	X	X	HIGH IMPEDANCE
1	0	0	NO CHANGE
1	0	1	0
1	1	0	1
1	1	1	1

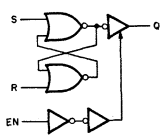

0; LOW LEVEL
1; HIGH LEVEL
X; DON'T CARE

TC4046BP (TOSHIBA)
HD14046BP (HITACHI)
MC14046BCP (MOTOROLA)
C-MOS PHASE LOCKED LOOP
— TOP VIEW —

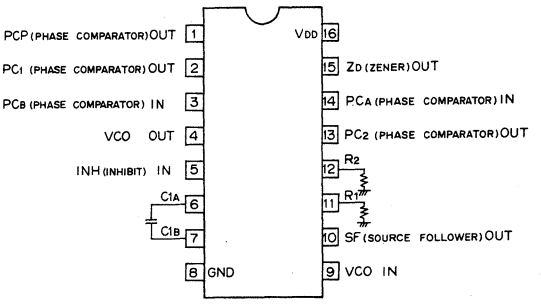

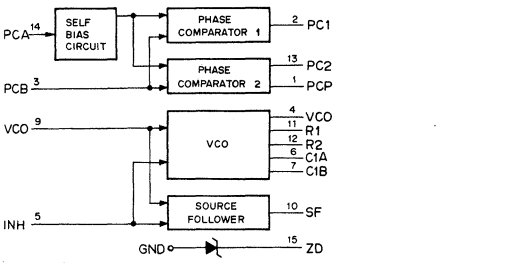

TC4049BP (TOSHIBA)
μPD4049C (NEC)
MB84049B (FUJITSU)
MB84049UB (FUJITSU)
MC14049UBCP (MOTOROLA)
C-MOS INVERTING TYPE BUFFER/CONVERTER
— TOP VIEW —

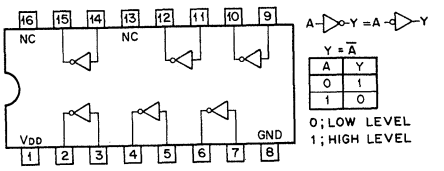

Y = $\overline{A}$

A	Y
0	1
1	0

0; LOW LEVEL
1; HIGH LEVEL

TC4051BP (TOSHIBA)
μPD4051BC (NEC)
HD14051BP (HITACHI)
MC14051BCP (MOTOROLA)
C-MOS 8-CHANNEL MULTIPLEXER/DEMULTIPLEXER
— TOP VIEW —

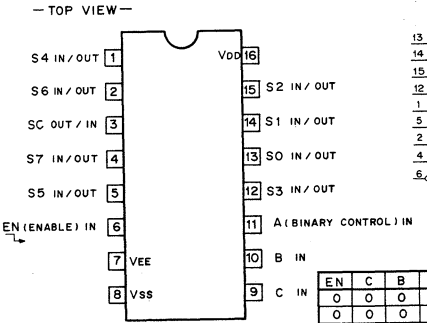

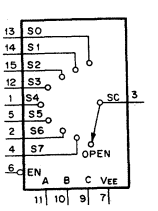

EN	C	B	A	"ON" CHANNEL
0	0	0	0	0
0	0	0	1	1
0	0	1	0	2
0	0	1	1	3
0	1	0	0	4
0	1	0	1	5
0	1	1	0	6
0	1	1	1	7
1	X	X	X	OPEN

0; LOW LEVEL
1; HIGH LEVEL
X; DON'T CARE

TC4052BP (TOSHIBA)
MB84052B (FUJITSU)
HD14052BP (HITACHI)
MC14052BCP (MOTOROLA)
C-MOS 4-CHANNEL MULTIPLEXER / DEMULTIPLEXER
— TOP VIEW —

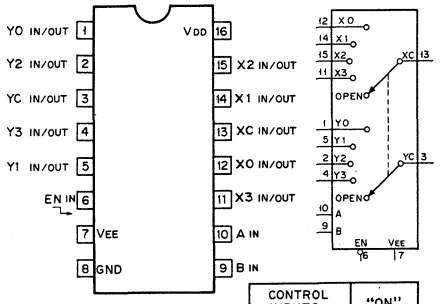

CONTROL INPUTS			"ON" CHANNEL
EN	B	A	
0	0	0	0
0	0	1	1
0	1	0	2
0	1	1	3
1	X	X	OPEN

0; LOW LEVEL
1; HIGH LEVEL
X; DON'T CARE.

TC4053BP (TOSHIBA)
MSM4053 (OKI)
MB84053B (FUJITSU)
HD14053BP (HITACHI)
μPD4053BC (NEC)
MC14053BCP (MOTOROLA)
C-MOS 2-CHANNEL MULTIPLEXER / DEMULTIPLEXER
— TOP VIEW —

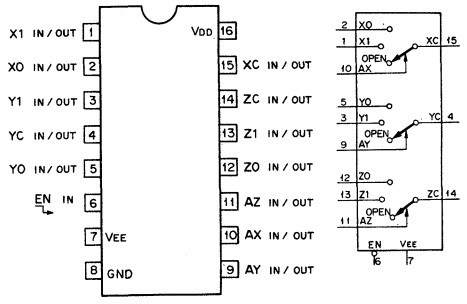

CONT. INPUTS		ON CHANNEL
EN	A (X,Y,Z,)	
0	0	0
0	1	1
1	X	OPEN

0; LOW LEVEL
1; HIGH LEVEL
X; DON'T CARE.

TC4069UBP (TOSHIBA)
μPD4069C (NEC)
μPD4069UBC (NEC)
MB84069B (FUJITSU)
MB84069UB (FUJITSU)
HD14069BP (HITACHI)
HD14069UBP (HITACHI)
MC14069UBCP (MOTOROLA)
C-MOS INVERTER
— TOP VIEW —

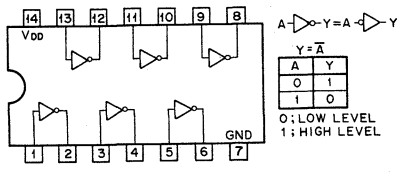

A	Y
0	1
1	0

0; LOW LEVEL
1; HIGH LEVEL

TC4071BP (TOSHIBA)
μPD4071BC (NEC)
MC14071BCP (MOTOROLA)
C-MOS 2-INPUT OR GATE
— TOP VIEW —

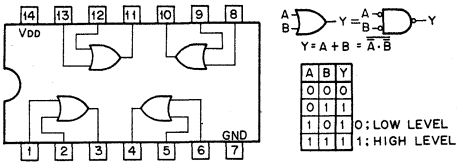

A	B	Y
0	0	0
0	1	1
1	0	1
1	1	1

0; LOW LEVEL
1; HIGH LEVEL

TC4073BP (TOSHIBA)
μPD4073BC (NEC)
MC14073BCP (MOTOROLA)
C-MOS 3-INPUT POSITIVE AND GATE
— TOP VIEW —

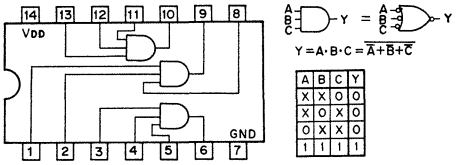

A	B	C	Y
X	X	0	0
X	0	X	0
0	X	X	0
1	1	1	1

TC4081BP (TOSHIBA)
MB84081B (FUJITSU)
MC14081BCP (MOTOROLA)
μPD4081BC (NEC)
C-MOS 2-INPUT AND GATE
— TOP VIEW —

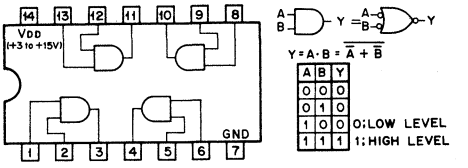

A	B	Y
0	0	0
0	1	0
1	0	0
1	1	1

0; LOW LEVEL
1; HIGH LEVEL

MC14495P (MOTOROLA)
C-MOS BCD-TO-SEVEN-SEGMENT 4-BIT LATCH/DECODER DRIVER
— TOP VIEW —

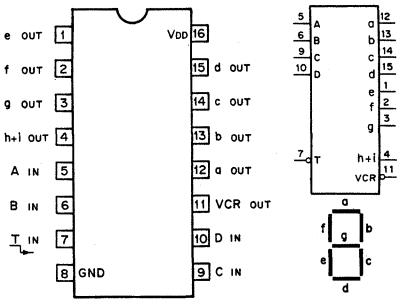

INPUTS				OUTPUTS									DISPLAY
T	D	C	B	A	a	b	c	d	e	f	g	h+l	VCR	
0	0	0	0	0	1	1	1	1	1	1	0	0	Z	0
0	0	0	0	1	0	1	1	0	0	0	0	0	Z	1
0	0	0	1	0	1	1	0	1	1	0	1	0	Z	2
0	0	0	1	1	1	1	1	1	0	0	1	0	Z	3
0	0	1	0	0	0	1	1	0	0	1	1	0	Z	4
0	0	1	0	1	1	0	1	1	0	1	1	0	Z	5
0	0	1	1	0	1	0	1	1	1	1	1	0	Z	6
0	0	1	1	1	1	1	1	0	0	0	0	0	Z	7
0	1	0	0	0	1	1	1	1	1	1	1	0	Z	8
0	1	0	0	1	1	1	1	1	0	1	1	0	Z	9
0	1	0	1	0	1	1	1	0	1	1	1	1	Z	A
0	1	0	1	1	0	0	1	1	1	1	1	1	Z	b
0	1	1	0	0	1	0	0	1	1	1	0	1	Z	C
0	1	1	0	1	0	1	1	1	1	0	1	1	Z	d
0	1	1	1	0	1	0	0	1	1	1	1	1	Z	E
0	1	1	1	1	1	0	0	0	1	1	1	1	0	F
↓	X	X	X	X	X	X	X	X	X	X	X	X	Z/0	DATA LATCH
1	X	X	X	X	X	X	X	X	X	X	X	X	Z/0	DATA HOLD

0; LOW LEVEL
1; HIGH LEVEL
X; DON'T CARE
Z; HIGH IMPEDANCE

HD14503BP (HITACHI)
MC14503BCP (MOTOROLA)
C-MOS NON-INVERTING 3-STATE BUFFER
— TOP VIEW —

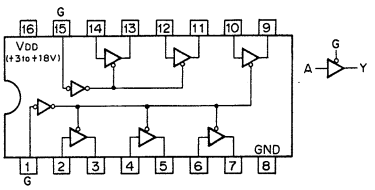

A	G	Y
0	0	0
1	0	1
X	1	HI-Z

0; LOW LEVEL
1; HIGH LEVEL
X; DON'T CARE
HI-Z; HIGH IMPEDANCE

TC4512BP (TOSHIBA)
MC14512BCP (MOTOROLA)
C-MOS 8-CHANNEL DATA SELECTOR/MULTIPLEXER
-TOP VIEW-

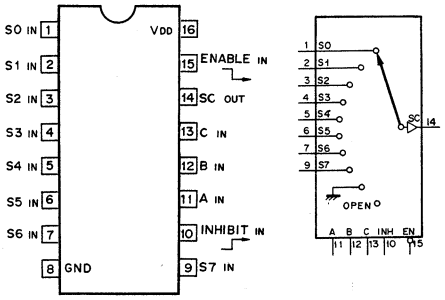

CONTROL INPUTS					OUTPUT
EN	INH	C	B	A	SC
0	0	0	0	0	S0
0	0	0	0	1	S1
0	0	0	1	0	S2
0	0	0	1	1	S3
0	0	1	0	0	S4
0	0	1	0	1	S5
0	0	1	1	0	S6
0	0	1	1	1	S7
0	1	X	X	X	GND
1	X	X	X	X	OPEN

0; LOW LEVEL
1; HIGH LEVEL
X; DON'T CARE

TC4520BP (TOSHIBA)
MB84520B (FUJITSU)
MC14520BCP (MOTOROLA)
C-MOS DUAL 4-BIT BINARY UP COUNTER
— TOP VIEW —

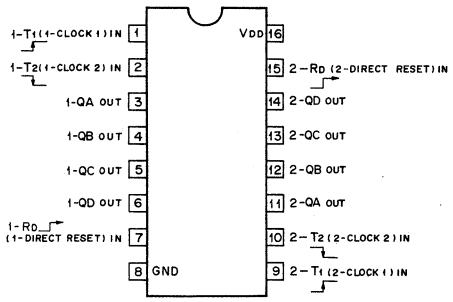

STATE	OUTPUTS			
	QD	QC	QB	QA
0	0	0	0	0
1	0	0	0	1
2	0	0	1	0
3	0	0	1	1
4	0	1	0	0
5	0	1	0	1
6	0	1	1	0
7	0	1	1	1
8	1	0	0	0
9	1	0	0	1
10	1	0	1	0
11	1	0	1	1
12	1	1	0	0
13	1	1	0	1
14	1	1	1	0
15	1	1	1	1

0; LOW LEVEL
1; HIGH LEVEL
X; DON'T CARE

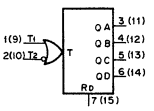

T1	T2	RD	ACTION
↓	1	0	INCREMENT COUNTER
0	↓	0	INCREMENT COUNTER
↓	X	0	NO CHANGE
X	↓	0	NO CHANGE
↓	0	0	NO CHANGE
1	↓	0	NO CHANGE
X	X	1	QA THRU QD = 0

MC14526BCP (MOTOROLA)
C-MOS PROGRAMMABLE DIVIDE-BY-N 4-BIT BINARY DOWN COUNTER
—TOP VIEW—

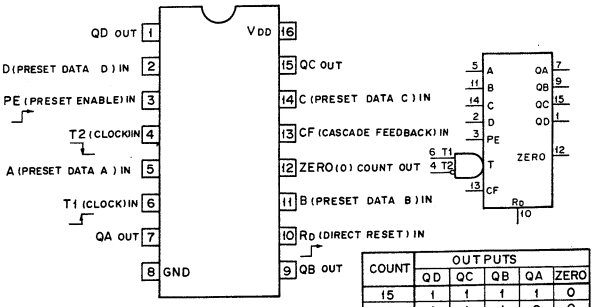

T1	T2	PE	RD	ACTION
0	0	0	0	NO COUNT
↓	0	0	0	COUNT ↓
X	↑	0	0	NO COUNT
↑	↓	0	0	COUNT ↑
X	X	1	0	PRESET
X	X	X	1	RESET

0; LOW LEVEL
1; HIGH LEVEL
X; DON'T CARE

COUNT	OUTPUTS				
	QD	QC	QB	QA	ZERO
15	1	1	1	1	0
14	1	1	1	0	0
13	1	1	0	1	0
12	1	1	0	0	0
11	1	0	1	1	0
10	1	0	1	0	0
9	1	0	0	1	0
8	1	0	0	0	0
7	0	1	1	1	0
6	0	1	1	0	0
5	0	1	0	1	0
4	0	1	0	0	0
3	0	0	1	1	0
2	0	0	1	0	0
1	0	0	0	1	0
0	0	0	0	0	1

TC4528BP (TOSHIBA)
μPD4528C (NEC)
MC14528BCP (MOTOROLA)
C-MOS RETRIGGERABLE / RESETTABLE MMV
—TOP VIEW—

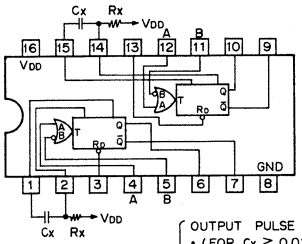

INPUTS			OUTPUTS	
A	B	RD	Q	$\overline{Q}$
↓	1	1	⎍	⎍
↓	0	1	0	1
1	↑	1	0	1
0	↑	1	⎍	⎍
X	X	0	0	1

0; LOW LEVEL
1; HIGH LEVEL
X; DON'T CARE

OUTPUT PULSE WIDTH Q OR $\overline{Q}$
• (FOR Cx ≧ 0.01μF USE FORMULA)
PW = 0.2 • Rx • Cx • $\frac{1}{n}$ (VDD - GND)
• (FOR Cx < 0.01μF USE DATA BOOK)

HD14538BP (HITACHI)
MC14538BCP (MOTOROLA)
C-MOS DUAL RETRIGGERABLE/NON-RETRIGGERABLE MONOSTABLE MULTIVIBRATOR
-TOP VIEW-

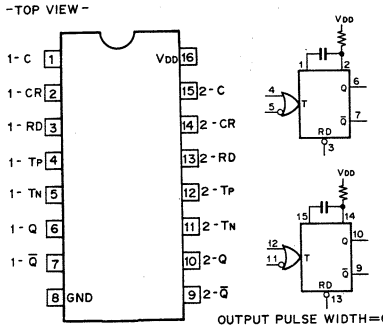

RETRIGGERABLE M.M.V

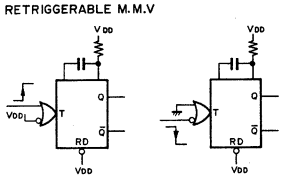

NON-RETRIGGERABLE M.M.V

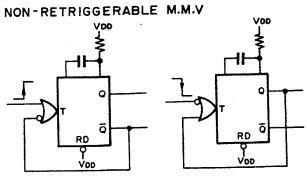

MC14539BCP (MOTOROLA)
TC4539BP (TOSHIBA)
μPD4539BC (NEC)
C-MOS DUAL 4-CHANNEL DATA SELECTOR/MULTIPLEXER
— TOP VIEW —

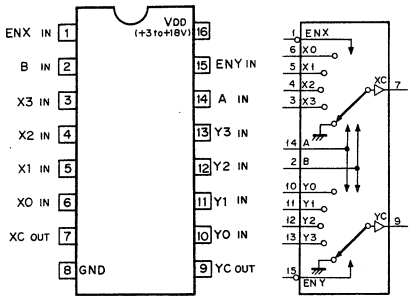

CONT IN			ON CHANNEL
EN	B	A	
0	0	0	0
0	0	1	1
0	1	0	2
0	1	1	3
1	X	X	GND

0 ; LOW LEVEL
1 ; HIGH LEVEL
X ; DON'T CARE

TC40174BP (TOSHIBA)
MC14174BCP (MOTOROLA)
C-MOS D-TYPE FLIP-FLOP
—TOP VIEW—

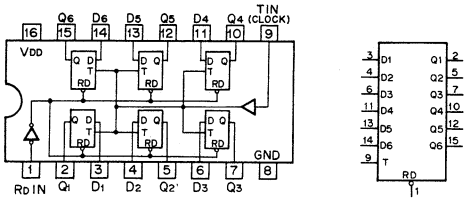

INPUTS			OUTPUT
T	D	RD	Q
↑	0	1	0
↑	1	1	1
↓	X	1	Q_0
X	X	0	0

0 ; LOW LEVEL
1 ; HIGH LEVEL
X ; DON'T CARE

TC4555BP (TOSHIBA)
MC14555BCP (MOTOROLA)
C-MOS BINARY TO 1-OF-4 DECODER / DEMULTIPLEXER
—TOP VIEW—

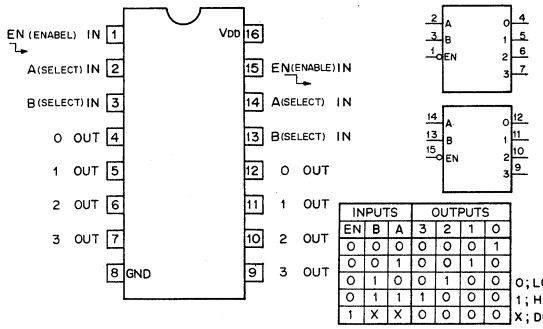

INPUTS			OUTPUTS			
EN	B	A	3	2	1	0
0	0	0	0	0	0	1
0	0	1	0	0	1	0
0	1	0	0	1	0	0
0	1	1	1	0	0	0
1	X	X	0	0	0	0

0 ; LOW LEVEL
1 ; HIGH LEVEL
X ; DON'T CARE

TC40175BP (TOSHIBA)
MC14175BCP (MOTOROLA)
C-MOS D-TYPE FLIP-FLOP
-TOP VIEW-

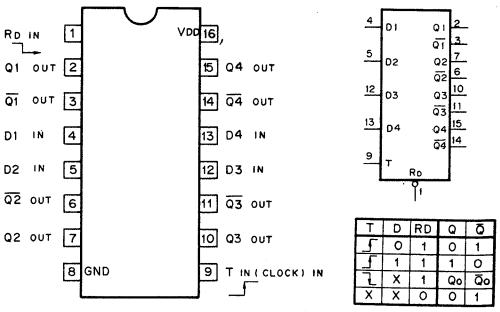

T	D	RD	Q	$\overline{Q}$
↑	0	1	0	1
↑	1	1	1	0
↓	X	1	Q_0	$\overline{Q}_0$
X	X	0	0	1

0 ; LOW LEVEL
1 ; HIGH LEVEL
X ; DON'T CARE

MC14557BCP (MOTOROLA)
C-MOS 1-TO-64-BIT VARIABLE LENGTH SHIFT REGISTER
—TOP VIEW—

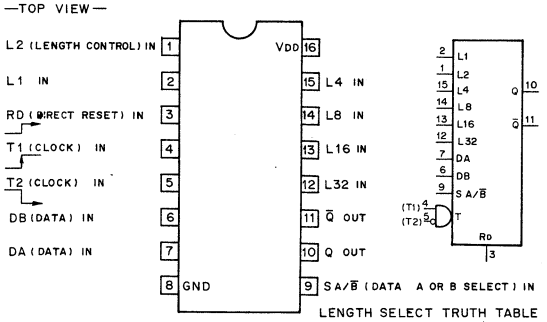

INPUTS				OUTPUT
RD	SA/B	T1	T2	Q
0	0	↑	0	DB
0	1	↑	0	DA
0	0	1	↓	DB
0	1	1	↓	DA
1	X	X	X	0

0 ; LOW LEVEL
1 ; HIGH LEVEL
X ; DON'T CARE

LENGTH SELECT TRUTH TABLE

L32	L16	L8	L4	L2	L1	REGISTER LENGTH
0	0	0	0	0	0	1 - BIT
0	0	0	0	0	1	2 - BIT
0	0	0	0	1	0	3 - BIT
0	0	0	0	1	1	4 - BIT
0	0	0	1	0	0	5 - BIT
1	1	1	1	0	0	61 - BIT
1	1	1	1	0	1	62 - BIT
1	1	1	1	1	0	63 - BIT
1	1	1	1	1	1	64 - BIT

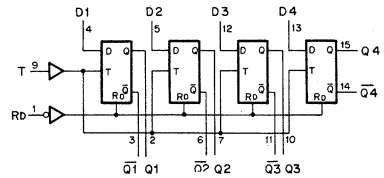

TC40H074P (TOSHIBA)
C-MOS HIGH SPEED D-TYPE FLIP-FLOP WITH DIRECT SET/RESET
— TOP VIEW—

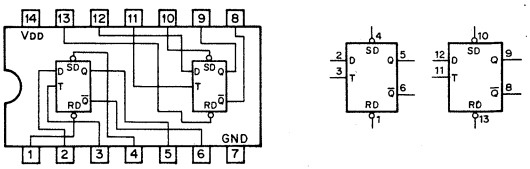

D-MODE

tn	tn + 1	
D	Q	$\overline{Q}$
0	0	1
1	1	0

R-S MODE

INPUT		OUTPUT	
RD	SD	Q	$\overline{Q}$
0	0	1	1
0	1	0	1
1	0	1	0
1	1	D-MODE	

0 ; LOW LEVEL
1 ; HIGH LEVEL

μPD4584BC (NEC)
MC14584BCP (MOTOROLA)
C-MOS SCHMITT TRIGGER INVERTER
—TOP VIEW—

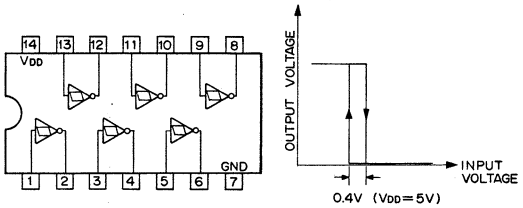

0.4V (V_{DD}=5V)
0.45V(V_{DD}=10V)
0.90V(V_{DD}=15V)

TC40H368P (TOSHIBA)
C-MOS INVERTING 3-STATE BUFFER
— TOP VIEW —

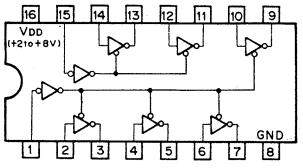

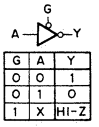

G	A	Y
0	0	1
0	1	0
1	X	HI-Z

0 ; LOW LEVEL
1 ; HIGH LEVEL
X ; DON'T CARE
HI-Z ; HIGH IMPEDANCE

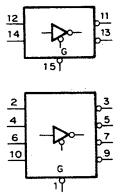

C40H390P (TOSHIBA)
C-MOS DIVIDE-BY-2 AND DIVIDE-BY-5 COUNTER
— TOP VIEW —

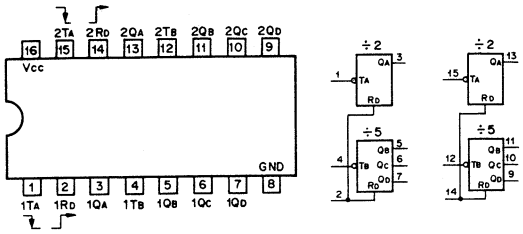

COUNT SEQUENCE
÷2 SECTION

COUNT	QA
0	0
1	1

÷5 SECTION

COUNT	QD	QC	QB
0	0	0	0
1	0	0	1
2	0	1	0
3	0	1	1
4	1	0	0

RESET/COUNT FUNCTION

RD	QD	QC	QB	QA
1	0	0	0	0
0	COUNT			

0 ; LOW LEVEL
1 ; HIGH LEVEL

TA7069P (TOSHIBA)
VIDEO AMPLIFIER
— SIDE VIEW —

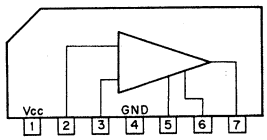

TC5501P (TOSHIBA) (ACCESS TIME = 450 nS)
TC5501P-1 (TOSHIBA) (ACCESS TIME = 650 nS)
uPD5101LC-1 (NEC) (ACCESS TIME = 450 nS)
5101L-1 (INTEL) (ACCESS TIME = 450 nS)
C-MOS 1024-BIT(256x4) STATIC RAM
— TOP VIEW —

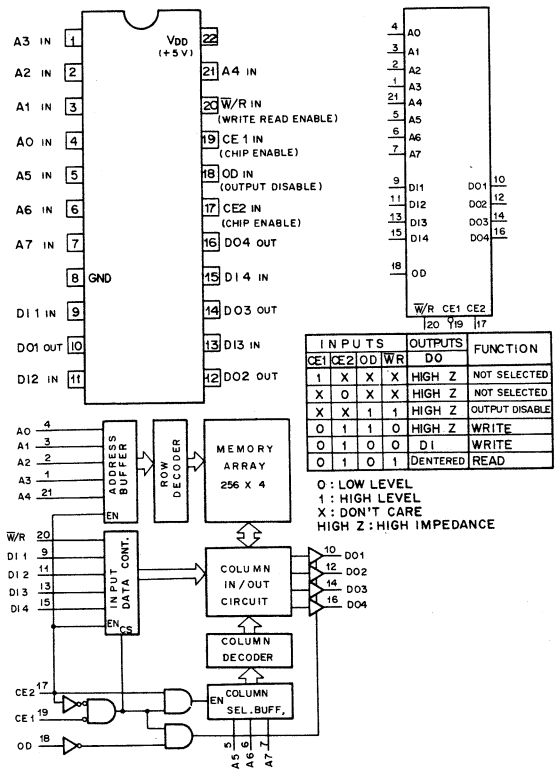

INPUTS				OUTPUTS	FUNCTION
CE1	CE2	OD	WR	DO	
1	X	X	X	HIGH Z	NOT SELECTED
X	0	X	X	HIGH Z	NOT SELECTED
X	X	1	1	HIGH Z	OUTPUT DISABLE
0	1	1	0	HIGH Z	WRITE
0	1	0	0	DI	WRITE
0	1	0	1	DENTERED	READ

0 : LOW LEVEL
1 : HIGH LEVEL
X : DON'T CARE
HIGH Z : HIGH IMPEDANCE

TC74HC107P (TOSHIBA)
HD74HC107P (HITACHI)
MC74HC107N (MOTOROLA)
C-MOS DUAL J-K FLIP-FLOPS
— TOP VIEW —

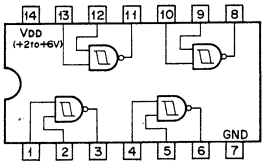

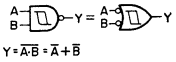

A	B	Y
0	0	1
0	1	1
1	0	1
1	1	0

0 ; LOW LEVEL
1 ; HIGH LEVEL

TC74HC132P (TOSHIBA)
HD74HC132P (HITACHI)
MC74HC132N (MOTOROLA)
C-MOS 2-INPUT HAND SCHMITT TRIGGER
— TOP VIEW —

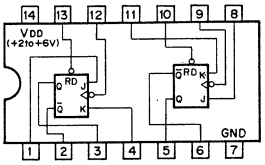

INPUT				OUTPUT
RD	CK	J	K	Q
0	X	X	X	0
1	↓	0	0	NO CHANGE
1	↓	1	0	1
1	↓	0	1	0
1	↓	1	1	TOGGLE

0 : LOW LEVEL
1 : HIGH LEVEL
X : DON'T CARE

TD62105P (TOSHIBA)
TTL INVERTING DRIVER WITH OPEN COLLECTOR
— TOP VIEW —

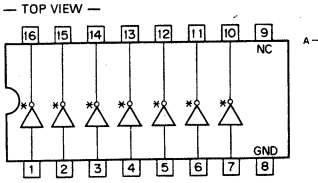

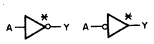

Y = Ā

A	Y
0	1
1	0

0 ; LOW LEVEL
1 ; HIGH LEVEL

* OPEN COLLECTOR

TL072CP (TI)
TL072ACP (TI)
TL072BCP (TI)
OPERATIONAL AMPLIFIER
(LOW-NOISE, JFET-INPUT)
— TOP VIEW —

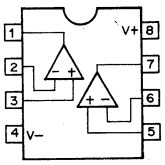

TL074CN (TI)
TL074ACN (TI)
TL074BCN (TI)
OPERATIONAL AMPLIFIER
(LOW-NOISE, JFET-INPUT)
— TOP VIEW —

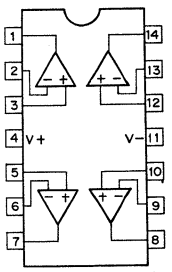

TL081CP (TI)
OPERATIONAL AMPLIFIER
(JFET INPUT)
— TOP VIEW —

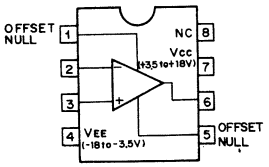

TL082CP (TI)
µPC4082C (NEC)
TL082ACP (TI)
TL082BCP (TI)
OPERATIONAL AMPLIFIER
(JFET-INPUT)
— TOP VIEW —

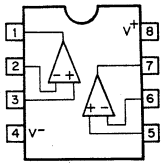

TL084CN (TI)
TL084ACN (TI)
TL084BCN (TI)
OPERATIONAL AMPLIFIER
(JFET-INPUT)
— TOP VIEW —

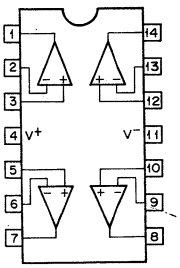

TL191CN (TI)

TWIN DUAL COMPLEMENTARY BI-MOS ANALOG SWITCH

— TOP VIEW —

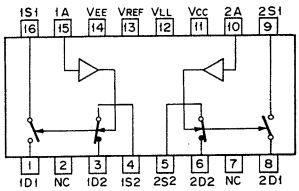

A	S1	S2
1	ON	OFF
0	OFF	ON

0; LOW LEVEL
1; HIGH LEVEL

TL489CP (TI)

5-STEP ANALOG LEVEL DETECTOR WITH OPEN COLLECTOR OUTPUT

— TOP VIEW —

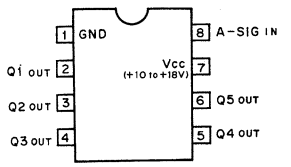

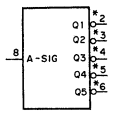

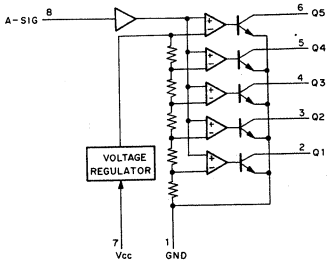

INPUT A-SIG(V)	OUTPUTS Q5	Q4	Q3	Q2	Q1
<≃0.2	1	1	1	1	1
≃0.2 to ≃0.4	1	1	1	1	0
≃0.4 to ≃0.6	1	1	1	0	0
≃0.6 to ≃0.8	1	1	0	0	0
≃0.8 to ≃1.0	1	0	0	0	0
≃1.0<	0	0	0	0	0

0; LOW LEVEL
1; HIGH LEVEL

TL601CP (TI)

P-MOS ANALOG SWITCH

— TOP VIEW —

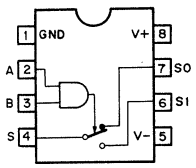

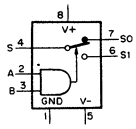

CONT IN A	B	ON CHANNEL
0	0	SO
0	1	SO
1	0	SO
1	1	S1

0; LOW LEVEL
1; HIGH LEVEL

TL607CP (TI)
SN72607P (TI)

MOS ANALOG SWITCH

— TOP VIEW —

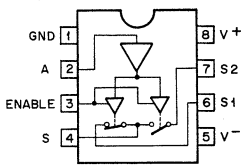

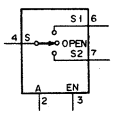

INPUTS A	EN	SW
X	0	OPEN
0	1	6–7
1	1	6–7

0; LOW LEVEL
1; HIGH LEVEL
X; DON'T CARE

TL610CP (TI)

MOS ANALOG SWITCH

— TOP VIEW —

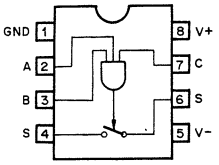

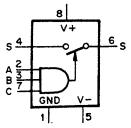

CONT IN A	B	C	S
0	X	X	OFF(OPEN)
X	0	X	OFF(OPEN)
X	X	0	OFF(OPEN)
1	1	1	ON(CLOSED)

0; LOW LEVEL
1; HIGH LEVEL
X; DON'T CARE

TL820CN (TI)

VOLTAGE COMPARATOR (DIFFERENTIAL INPUTS)

— TOP VIEW —

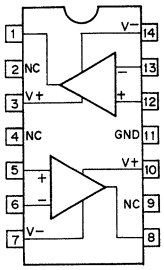

uA723CN (TI)
uA723DC (FSC)
HA17723G (HITACHI)

VOLTAGE REGULATOR

— TOP VIEW —

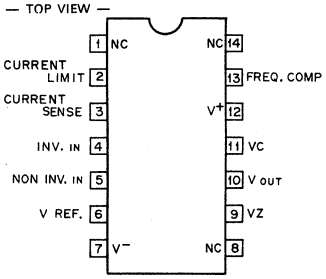

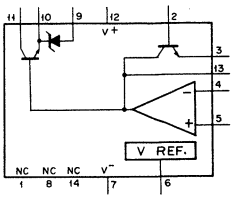

µA78□□UC (FSC)
µPC143□□H (NEC)
µPC78□□H (NEC)

POSITIVE VOLTAGE REGULATOR (1A)

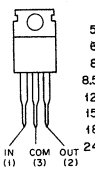

5V	µA7805UC	FS7805	µPC14305H	µPC7805H
6V	µA7806UC			
8V	µA7808UC		µPC14308H	µPC7808H
8.5V	µA7885UC			
12V	µA7812UC	FS7812	µPC14312H	µPC7812H
15V	µA7815UC	FS7815	µPC14315H	µPC7815H
18V	µA7818UC		µPC14318H	µPC7818H
24V	µA7824UC	FS7824	µPC14324H	µPC7824H

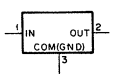

μA78L□□AWV (FSC)
μA78L□□ACL (TI)
μPC78L□□ (NEC)
μPC78L□□A (NEC)
POSITIVE VOLTAGE REGULATOR(100mA)

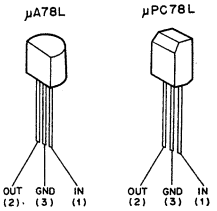

2.6V	μA78L26AWV	μA78L02ACL	
5V	μA78L05AWV	μA78L05ACL	μPC78L05(A)
6.2V	μA78L62AWV	μA78L06ACL	
8V		μA78L08ACL	μPC78L08
8.2V	μA78L82AWV		
9V	μA78L09AWV	μA78L09ACL	
10V		μA78L10ACL	
12V	μA78L12 AWV	μA78L12 ACL	μPC78L12
15V	μA78L15 AWV	μA78L15ACL	μPC78L15
18V	μA78L18 AWV		
24V	μA78L24AWV		

uA796HC (FSC)
uA796HCA (FSC)
MC1596G (MOTOROLA)
DOUBLE-BALANCED MOD/DEMOD.
— BOTTOM VIEW —

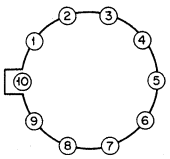

1 +SIGNAL INPUT
2 GAIN ADJUST
3 GAIN ADJUST
4 - SIGNAL INPUT
5 BIAS
6 +OUTPUT
7 +CARRIER INPUT
8 - CARRIER INPUT
9 - OUTPUT
10 VEE

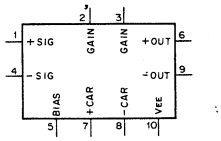

μA796PC (FSC)
MC1496P (MOTOROLA)
BALANCED MODULATOR / DEMODULATOR
-TOP VIEW-

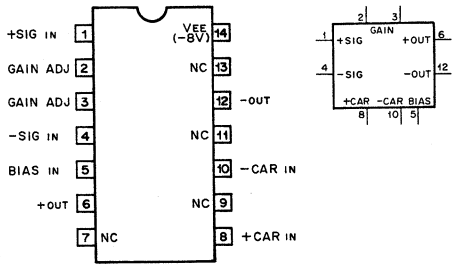

μPC91A (NEC)
ANALOG SWITCH
-BOTTOM VIEW-

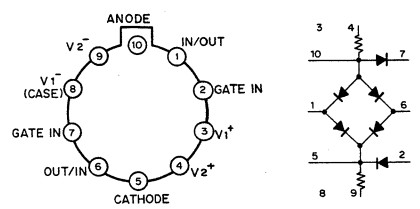

μPC159A (NEC)
OPERATIONAL AMPLIFIER
(HIGH SPEED, WIDE BANDWIDTH)
— BOTTOM VIEW—

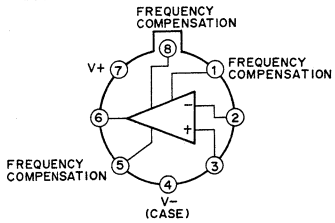

μPC311C (NEC)
VOLTAGE COMPARATOR
-TOP VIEW-

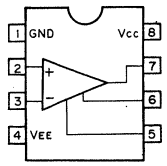

uPC318C (NEC)
HIGH-PERFORMANCE OPERATIONAL AMPLIFIER
— TOP VIEW —

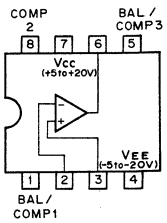

uPC272C (NEC)
uPC319C (NEC)
DUAL VOLTAGE COMPARATOR
— TOP VIEW —

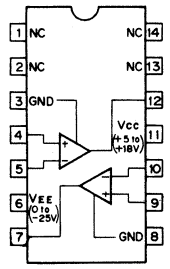

μPC324C (NEC)
QUAD. OP AMPLIFIER
-TOP VIEW-

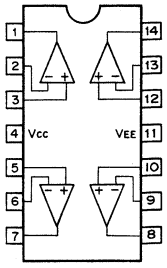

μPC339C (NEC)
COMPARATOR
-TOP VIEW-

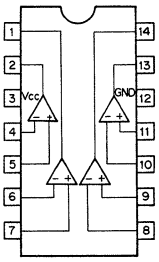

μPC358C (NEC)
LM358P (TI)
DUAL OPERATIONAL AMPLIFIERS
—TOP VIEW—

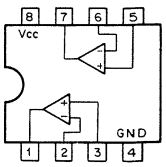

uPC393C (NEC)
uPC393G (NEC)
BA6993 (ROHM)
VOLTAGE COMPARATOR
— TOP VIEW —

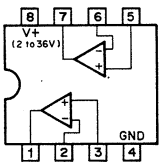

μPC648D (NEC)

12-BIT D/A CONVERTER WITH OPEN COLLECTOR OUTPUT
— TOP VIEW —

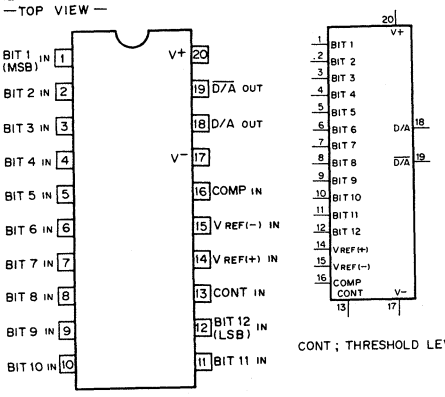

CONT ; THRESHOLD LEVEL CONTROL

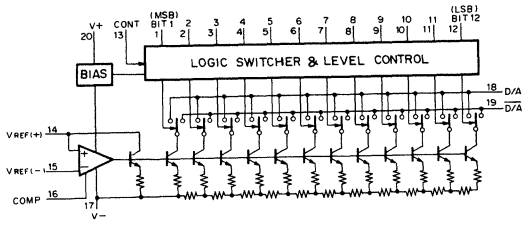

uPC649C (NEC)

SAMPLE AND HOLD CIRCUIT
— TOP VIEW —

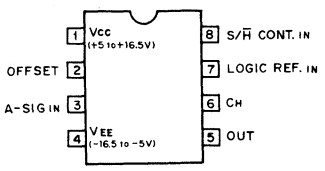

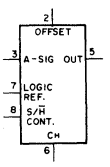

S/H CONT. ; SAMPLE/HOLD CONTROL
CH ; EXTERNAL HOLD CAPACITOR

μPC4556C (NEC)

OPERATIONAL AMPLIFIER
(WIDE BAND, DECOMPENSATED)
—TOP VIEW—

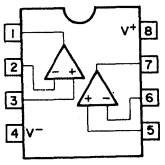

μPC4557C (NEC)

OPERATIONAL AMPLIFIER
(WIDE BAND, LOW NOISE)
—TOP VIEW—

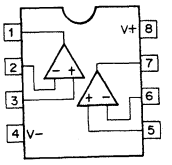

TC74HC4538P (TOSHIBA)

C-MOS DUAL RETRIGGERABLE/NON-RETRIGGERABLE MONOSTABLE MULTIVIBRATOR
— TOP VIEW —

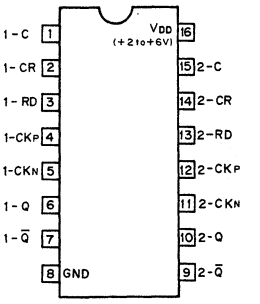

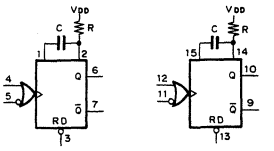

OUTPUT PULSE WIDTH = k·C·R

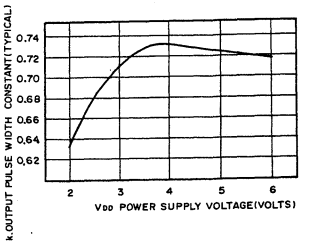

RETRIGGERABLE M.M.V

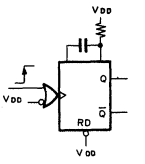

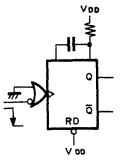

NON-RETRIGGERABLE M.M.V

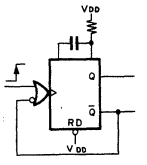

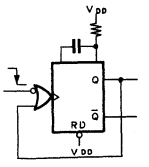

μPD8253C-5 (NEC)
8253-5 (INTEL)

N-MOS PROGRAMABLE INTERVAL TIMER

— TOP VIEW —

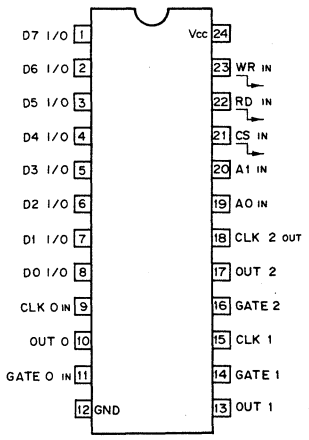

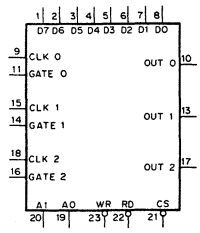

D7-D0 ; 8-BIT DATA I/O
CLK N ; COUNTER CLOCK
GATE N ; COUNTER GATE
OUT N ; COUNTER OUTPUT
RD ; READ COUNTER
WR ; WRITE CMD OR DATA
CS ; CHIP SELECT
A1, A0 ; COUNTER SELECT

FUNCTION TABLE

INPUTS					FUNCTION
CS	RD	WR	A1	A0	
0	1	0	0	0	Load Counter No. 0
0	1	0	0	1	Load Counter No. 1
0	1	0	1	0	Load Counter No. 2
0	1	0	1	1	Control Word
0	0	1	0	0	Read Counter 0
0	0	1	0	1	Read Counter 1
0	0	1	1	0	Read Counter 2
0	0	1	1	1	No-Operation (HI-Z)
1	X	X	X	X	Disable (HI-Z)
0	1	1	X	X	No-Operation (HI-Z)

0;LOW LEVEL
1;HIGH LEVEL
X;DON'T CARE
HI-Z;HIGH IMPEDANCE

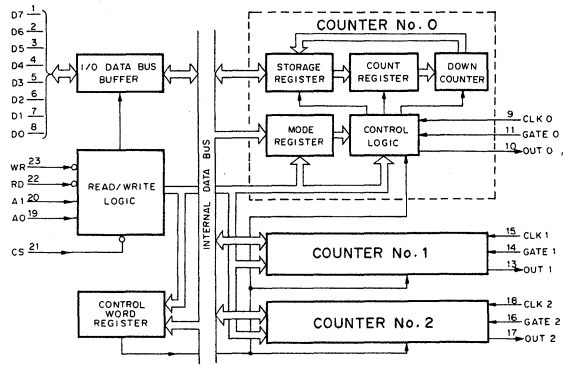

CONTROL WORD FORMAT

D7	D6	D5	D4	D3	D2	D1	D0
SC1	SC2	RL1	RL0	M2	M1	M0	BCD

BCD	OPERATION
0	16-BIT BINARY
1	BCD(4-DECADE)

M2	M1	M0	MODE
0	0	0	0
0	0	1	1
X	1	0	2
X	1	1	3
1	0	0	4
1	0	1	5

RL1	RL0	OPERATION
0	0	COUNTER LATCHING
0	1	READ/LOAD LSB ONLY
1	0	READ/LOAD MSB ONLY
1	1	LSB FIRST THEN MSB

SC1	SC0	SELECTED COUNTER
0	0	COUNTER No. 0
0	1	COUNTER No. 1
1	0	COUNTER No. 2
1	1	ILLEGAL

MB7051 (FUJITSU)

256-BIT (32x8) PROM (3-STATE OUTPUT)

— TOP VIEW —

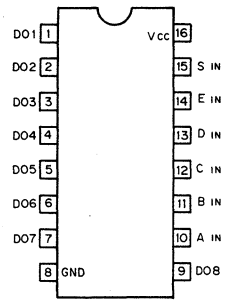

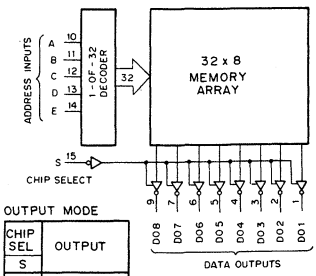

OUTPUT MODE

CHIP SEL	OUTPUT
S	
0	ENABLE
1	HI-IMPEDANCE

MB7051-A1U1
PROGRAMMED DATA

WORD (ADDRESS)	DATA OUTPUTS (IN HEXADECIMAL)
0 – 15	3F, 1E, 39, 1B, 27, 36, 20, 3F, 3F, 2D, 36, 27, 1B, 39, 1E, 3F,
16 – 31	3F, 3F, 3F, 3F, 3F, 3F, 3F, 3F, 3F, 3F, 3F, 3F, 3F, 3F, 3F, 3F,

MB7051-E1U1
PROGRAMMED DATA

WORD (ADDRESS)	DATA OUTPUTS (IN HEXADECIMAL)
0 – 15	00, 03, 00, 03, 01, 03, 01, 03, 00, 03, 00, 03, 01, 03, 01, 03,
16 – 31	00, 03, 02, 03, 01, 03, 01, 03, 00, 03, 02, 03, 01, 03, 01, 03,

MB7051-L1A1
PROGRAMMED DATA

WORD (ADDRESS)	DATA OUTPUTS (IN HEXADECIMAL)
0 – 15	FF, FB, F1, FD, FF, DF, FF, F9, 80, 1A, E0, F8, F0, DE, FC, FF,
16 – 31	D5, B0, 88, 8E, F2, D0, F2, 7E, 88, C3, F1, F9, FD, FE, FC, FC,

MB7051-L1U1
PROGRAMMED DATA

WORD (ADDRESS)	DATA OUTPUTS (IN HEXADECIMAL)
0 – 15	FF, FE, F8, F7, FF, E7, FF, FA, 7F, 81, DF, FB, F6, E7, F4, FF,
16 – 31	95, B0, B0, E2, F1, D8, F4, E6, 88, 91, F7, FC, F3, FD, FC, FC,

MB7051-L2A1
PROGRAMMED DATA

WORD (ADDRESS)	DATA OUTPUTS (IN HEXADECIMAL)
0 – 15	3A, 3A, 38, B8, 98, B8, BE, BE, B6, B7, 37, 33, 31, B1, B1, B7,
16 – 31	B7, B6, B6, B6, F6, E6, F6, B6, B6, B6, 36, 36, 36, 3E, 3E, 3A,

MB7051-L2U1
PROGRAMMED DATA

WORD (ADDRESS)	DATA OUTPUTS (IN HEXADECIMAL)
0 – 15	3A, 3A, 38, B8, 98, B8, BE, BE, B6, B7, 37, 33, 31, B1, B1, B7,
16 – 31	B7, B6, B6, B6, F6, E6, F6, B6, B6, B6, 36, 36, 36, 3E, 3E, 3A,

MB7051-R2U1
PROGRAMMED DATA

WORD (ADDRESS)	DATA OUTPUTS (IN HEXADECIMAL)
0 – 15	10, 10, 01, 05, 0E, 0F, 1E, 1E, 30, 10, 01, 05, 0E, 0F, 1E, 1E,
16 – 31	17, 17, 00, 01, 0A, 0B, 1F, 3F, 17, 17, 00, 01, 0A, 0B, 1F, 1F,

MB7052 (FUJITSU)
1024-BIT (256 x 4) PROM (3-STATE OUTPUT)

— TOP VIEW —

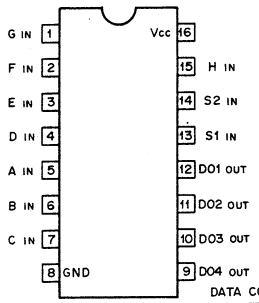

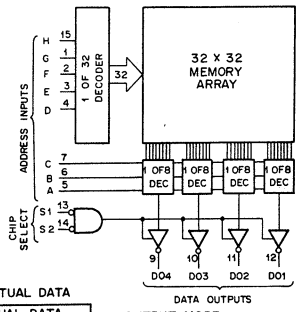

WORD / ADDRESS TABLE

WORD	ADDRESS INPUTS H	G	F	E	D	C	B	A
0	0	0	0	0	0	0	0	0
1	0	0	0	0	0	0	0	1
2	0	0	0	0	0	0	1	0
⋮	⋮	⋮	⋮	⋮	⋮	⋮	⋮	⋮
253	1	1	1	1	1	1	0	1
254	1	1	1	1	1	1	1	0
255	1	1	1	1	1	1	1	1

DATA CODE/ACTUAL DATA

DATA CODE		ACTUAL DATA DO4	DO3	DO2	DO1
0	0	0	0	0	0
1	1	0	0	0	1
2	2	0	0	1	0
3	3	0	0	1	1
4	4	0	1	0	0
5	5	0	1	0	1
6	6	0	1	1	0
7	7	0	1	1	1
8	8	1	0	0	0
9	9	1	0	0	1
10	A	1	0	1	0
11	B	1	0	1	1
12	C	1	1	0	0
13	D	1	1	0	1
14	E	1	1	1	0
15	F	1	1	1	1

IN HEXADECIMAL
IN DECIMAL

OUTPUT MODE

CHIP SEL S1	S2	OUTPUT
0	0	ENABLE
X	1	HI-IMPEDANCE
1	X	

0 ; LOW LEVEL
1 ; HIGH LEVEL
X ; DON'T CARE

MB7052-R1U1
PROGRAMMED DATA

WORD (ADDRESS)	DATA OUTPUTS (IN HEXADECIMAL)
0 – 15	0. 3. 6. 1. 7. 2. 3. 2. 2. 3. 2. 7. 1. 6. 3. 0.
16 – 31	0. 3. 6. 1. 7. 2. 3. 2. 2. 3. 2. 7. 1. 6. 3. 0.
32 – 47	8. B. E. 9. F. A. B. A. A. B. A. F. 9. E. B. 8.
48 – 63	0. 3. 6. 1. 7. 2. 3. 2. 2. 3. 2. 7. 1. 6. 3. 0.
64 – 79	4. 3. 6. 5. 7. 6. 7. 2. 2. 7. 6. 7. 5. 6. 3. 4.
80 – 95	C. B. E. D. F. E. F. A. A. F. E. F. D. E. B. C.
96 – 111	4. 3. 6. 5. 7. 6. 7. 2. 2. 7. 6. 7. 5. 6. 3. 4.
112 – 127	4. 3. 6. 5. 7. 6. 7. 2. 2. 7. 6. 7. 5. 6. 3. 4.
128 – 143	0. 3. 6. 1. 7. 2. 3. 2. 2. 3. 2. 7. 1. 6. 3. 0.
144 – 159	0. 3. 6. 1. 7. 2. 3. 2. 2. 3. 2. 7. 1. 6. 3. 0.
160 – 175	8. B. E. 9. F. A. B. A. A. B. A. F. 9. E. B. 8.
176 – 191	0. 3. 6. 1. 7. 2. 3. 2. 2. 3. 2. 7. 1. 6. 3. 0.
192 – 207	4. 3. 6. 5. 7. 6. 7. 2. 2. 7. 6. 7. 5. 6. 3. 4.
208 – 223	C. B. E. D. F. E. F. A. A. F. E. F. D. E. B. C.
224 – 239	4. 3. 6. 5. 7. 6. 7. 2. 2. 7. 6. 7. 5. 6. 3. 4.
240 – 255	4. 3. 6. 5. 7. 6. 7. 2. 2. 7. 6. 7. 5. 6. 3. 4.

MB7053 (FUJITSU)
2048-BIT (512x4) PROM (3-STATE OUTPUT)

— TOP VIEW —

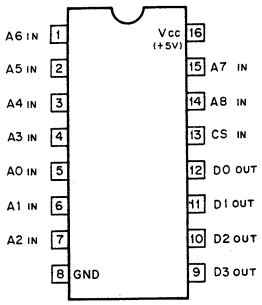

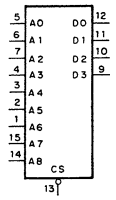

OUTPUT MODE

CHIP SEL CS	OUTPUT
0	ENABLE
1	HI-IMPEDANCE

0 ; LOW LEVEL
1 ; HIGH LEVEL

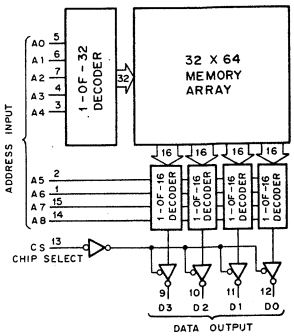

WORD/ADDRESS TABLE

WORD		ADDRESS INPUTS A8	A7	A6	A5	A4	A3	A2	A1	A0
0	000	0	0	0	0	0	0	0	0	0
1	001	0	0	0	0	0	0	0	0	1
2	002	0	0	0	0	0	0	0	1	0
⋮	⋮	⋮	⋮	⋮	⋮	⋮	⋮	⋮	⋮	⋮
9	009	0	0	0	0	0	1	0	0	1
10	00A	0	0	0	0	0	1	0	1	0
11	00B	0	0	0	0	0	1	0	1	1
12	00C	0	0	0	0	0	1	1	0	0
13	00D	0	0	0	0	0	1	1	0	1
14	00E	0	0	0	0	0	1	1	1	0
15	00F	0	0	0	0	0	1	1	1	1
16	010	0	0	0	0	1	0	0	0	0
⋮	⋮	⋮	⋮	⋮	⋮	⋮	⋮	⋮	⋮	⋮
509	1FD	1	1	1	1	1	1	1	0	1
510	1FE	1	1	1	1	1	1	1	1	0
511	1FF	1	1	1	1	1	1	1	1	1

IN HEXADECIMAL
IN DECIMAL

DATA CODE / ACTUAL DATA

DATA CODE		ACTUAL DATA D3	D2	D1	DO
0	0	0	0	0	0
1	1	0	0	0	1
2	2	0	0	1	0
3	3	0	0	1	1
4	4	0	1	0	0
5	5	0	1	0	1
6	6	0	1	1	0
7	7	0	1	1	1
8	8	1	0	0	0
9	9	1	0	0	1
10	A	1	0	1	0
11	B	1	0	1	1
12	C	1	1	0	0
13	D	1	1	0	1
14	E	1	1	1	0
15	F	1	1	1	1

IN HEXADECIMAL
IN DECIMAL

MB7054 (FUJITSU)
uPB426D (NEC)
4096-BIT (1024x4) PROM (3-STATE OUTPUT)
— TOP VIEW —

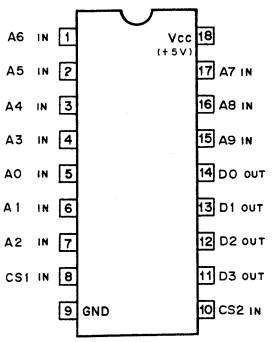

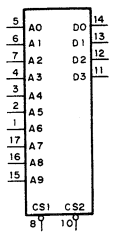

CHIP SEL		OUTPUT
CS1	CS2	
0	0	ENABLE
X	1	HI-IMPEDANCE
1	X	

0 ; LOW LEVEL
1 ; HIGH LEVEL
X ; DON'T CARE

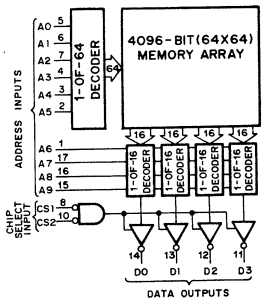

WORD/ADDRESS TABLE

WORD		ADDRESS INPUTS									
		A9	A8	A7	A6	A5	A4	A3	A2	A1	A0
0	000	0	0	0	0	0	0	0	0	0	0
1	001	0	0	0	0	0	0	0	0	0	1
2	002	0	0	0	0	0	0	0	0	1	0
⋮	⋮	⋮	⋮	⋮	⋮	⋮	⋮	⋮	⋮	⋮	⋮
9	009	0	0	0	0	0	0	1	0	0	1
10	00A	0	0	0	0	0	0	1	0	1	0
11	00B	0	0	0	0	0	0	1	0	1	1
12	00C	0	0	0	0	0	0	1	1	0	0
13	00D	0	0	0	0	0	0	1	1	0	1
14	00E	0	0	0	0	0	0	1	1	1	0
15	00F	0	0	0	0	0	0	1	1	1	1
16	010	0	0	0	0	0	1	0	0	0	0
⋮	⋮	⋮	⋮	⋮	⋮	⋮	⋮	⋮	⋮	⋮	⋮
⋮	⋮	⋮	⋮	⋮	⋮	⋮	⋮	⋮	⋮	⋮	⋮
⋮	⋮	⋮	⋮	⋮	⋮	⋮	⋮	⋮	⋮	⋮	⋮
1021	3FD	1	1	1	1	1	1	1	1	0	1
1022	3FE	1	1	1	1	1	1	1	1	1	0
1023	3FF	1	1	1	1	1	1	1	1	1	1

IN HEXADECIMAL
IN DECIMAL

DATA CODE/ACTUAL DATA

DATA CODE		ACTUAL DATA			
		D3	D2	D1	DO
0	0	0	0	0	0
1	1	0	0	0	1
2	2	0	0	1	0
3	3	0	0	1	1
4	4	0	1	0	0
5	5	0	1	0	1
6	6	0	1	1	0
7	7	0	1	1	1
8	8	1	0	0	0
9	9	1	0	0	1
10	A	1	0	1	0
11	B	1	0	1	1
12	C	1	1	0	0
13	D	1	1	0	1
14	E	1	1	1	0
15	F	1	1	1	1

IN HEXADECIMAL
IN DECIMAL

MBM2732A-35Z (FUJITSU)
M5L2732K (MITSUBISHI)
2732 (INTEL)
32K (4K-8) UV ERASABLE PROM
— TOP VIEW —

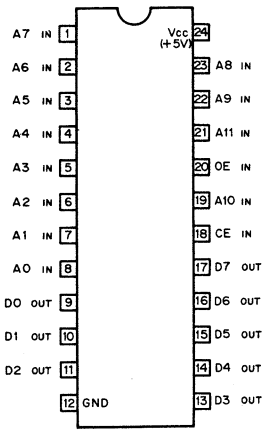

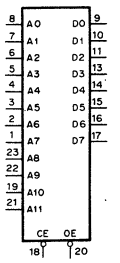

IN		OUT	FUNCTION
CE	OE	Dn	
0	0	DENTERED	READ
1	X	HIGH Z	STANDBY

0; LOW LEVEL
1; HIGH LEVEL
X; DON'T CARE
HIGH Z; HIGH IMPEDANCE

AO-A11 ; ADDRESS
CE ; CHIP ENABLE
OE ; OUTPUT ENABLE
DO-D7 ; DATA OUTPUTS

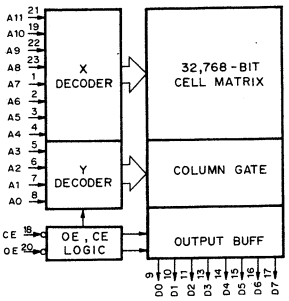

BVH-2180/PS/PM C-1 C-2 C-3
BVH-2000/PS/PM

SECTION C
SCHEMATIC DIAGRAM & BOARD LAYOUT

BVH-2500/P C-1 C-2 C-3

AU-27 BOARD (1-606-670-16)

Component Side

AU -27

AUD -1

REC EQ — RV108

REC LEVEL — RV109

AUD -2

REC EQ — RV208

REC LEVEL — RV209

1

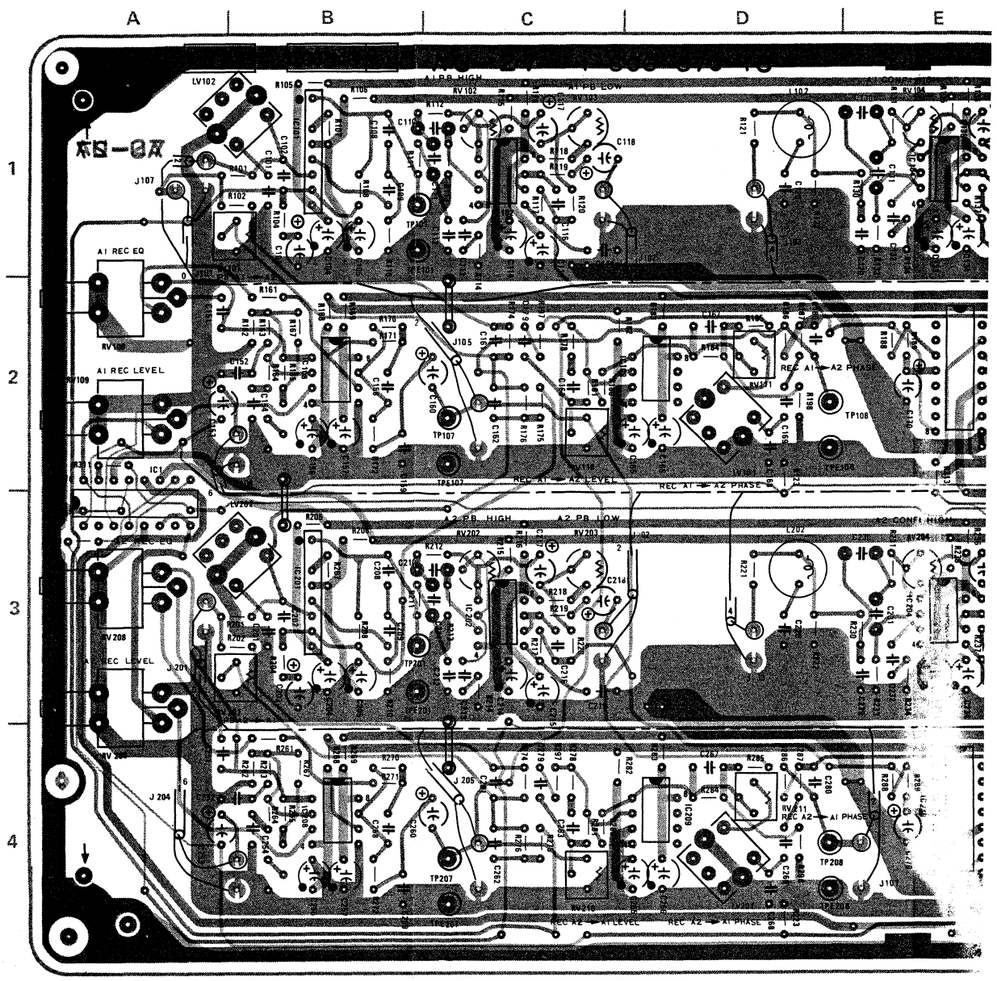

■ 1-606-670-16 COMPONENT SIDE

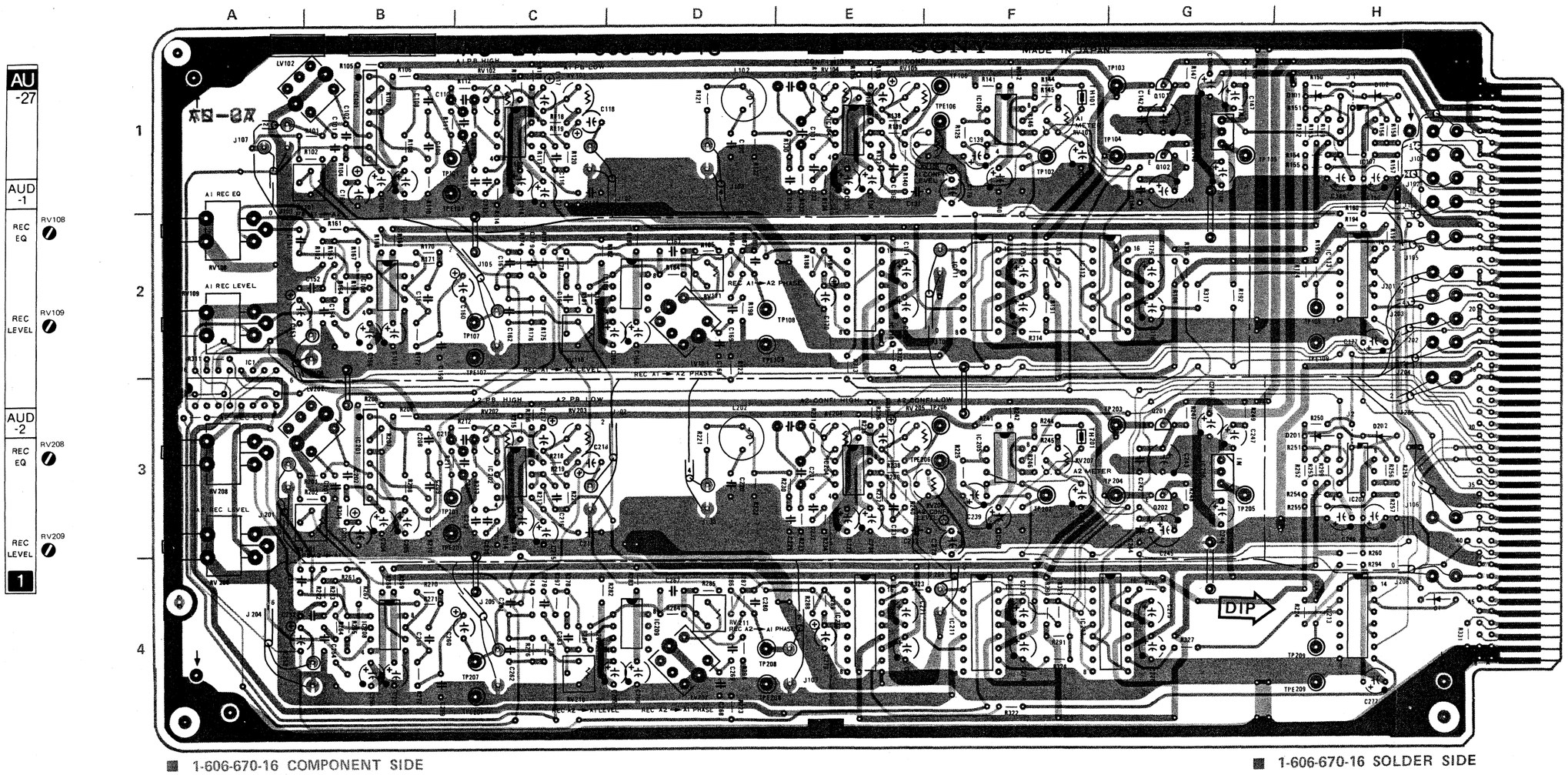

■ 1-606-670-16 COMPONENT SIDE

■ 1-606-670-16 SOLDER SIDE

AU-27 (1-606-670-13 & UP)

BVH-2000/PS/PM
BVH-2180/PS/PM
BVH-2500/P

D1	4H	TH101	1F
D101	1H	TH202	3F
D102	1H		
D201	3H	TP101	1C
D202	3H	TP102	1F
		TP103	1G
IC1	3A	TP104	1G
		TP105	1G
IC101	1B	TP106	1F
IC102	1C	TP107	2C
IC104	1E	TP108	2D
IC105	1F	TP109	2H
IC106	1G	TP201	3C
IC107	1H	TP202	3F
IC108	2B	TP203	3G
IC109	2D	TP204	3G
IC110	2E	TP205	3G
IC111	2F	TP206	3F
IC112	2G	TP207	4C
IC113	2H	TP208	4D
IC201	3B	TP209	4H
IC202	3C		
IC204	3E	TPE101	
IC205	3F		1C
IC206	3G	TPE106	
IC207	3H		1F
IC208	4B	TPE107	
IC209	4D		2C
IC210	4E	TPE108	
IC211	4F		2D
IC212	4G	TPE109	
IC213	4H		2H
		TPE201	
J1	1H		3C
J2	5H	TPE206	
			3F
LV101	2D	TPE207	
LV102	1B		4C
LV201	4D	TPE208	
LV202	3B		4D
		TPE209	
Q101	1G		4H
Q102	1G		
Q201	3G		
Q202	3G		
RV101	1B		
RV102	1C		
RV103	1C		
RV104	1E		
RV105	1E		
RV106	1F		
RV107	1F		
RV108	2A		
RV109	2A		
RV110	2C		
RV111	2D		
RV201	3B		
RV202	3C		
RV203	3C		
RV204	3E		
RV205	3E		
RV206	3F		
RV207	3F		
RV208	3A		
RV209	3A		
RV210	4C		
RV211	2D		

CARD RACK **AU-27** | **AU-27** CARD RACK

AU-27 BOARD

Audio-1, 2 REC EQ/PB Amplifier

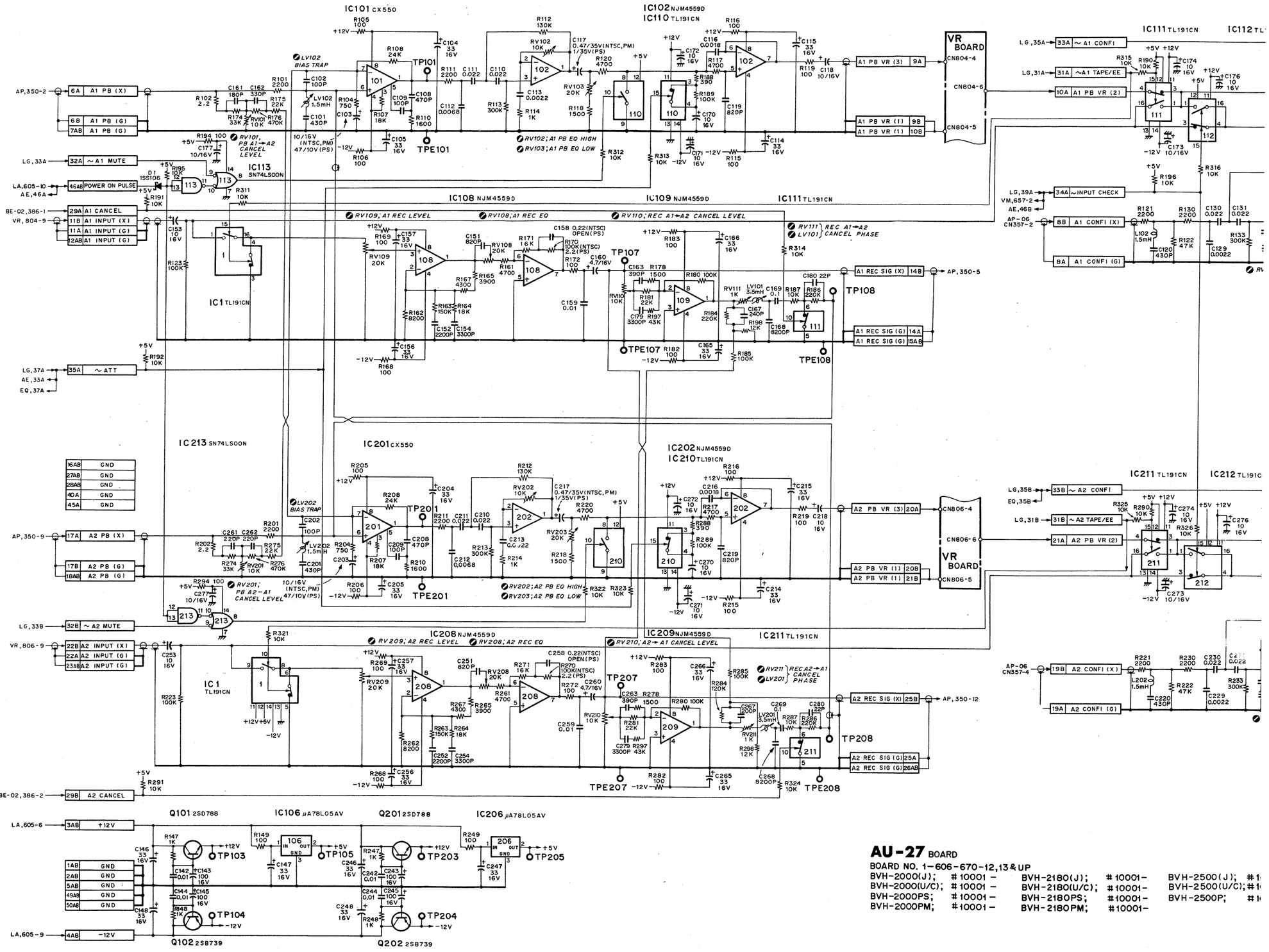

C-7 C-8

AU-27 BOARD

BOARD NO. 1-606-670-12,13 & UP

BVH-2000(J);	#10001 –	BVH-2180(J);	#10001-	BVH-2500(J);	#1
BVH-2000(U/C);	#10001 –	BVH-2180(U/C);	#10001-	BVH-2500(U/C);	#1
BVH-2000PS;	#10001 –	BVH-2180PS;	#10001-	BVH-2500P;	#1
BVH-2000PM;	#10001 –	BVH-2180PM;	#10001-		

C-8

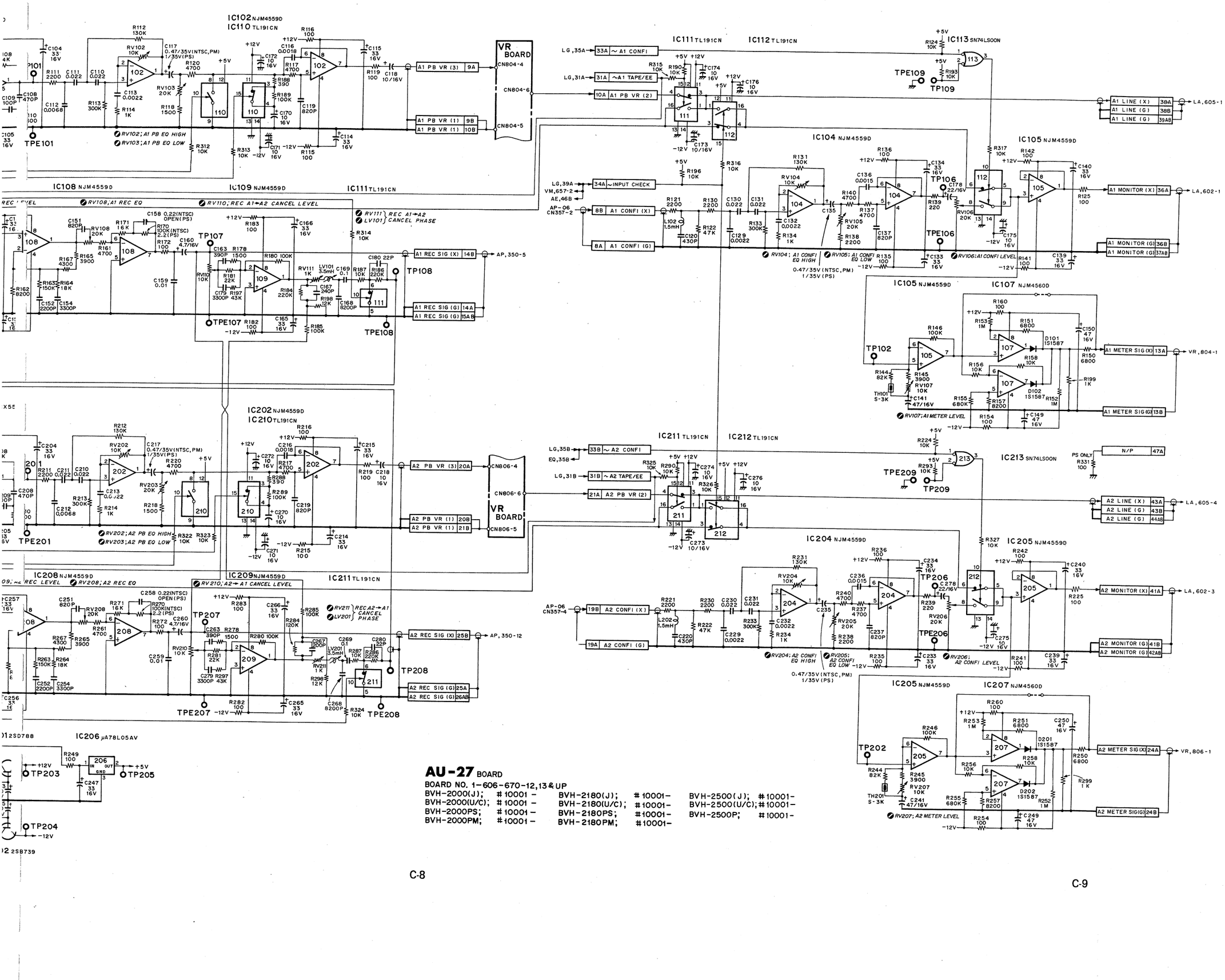

AU-27 BOARD

BOARD NO. 1-606-670-12,13 & UP

BVH-2000(J);	#10001 -	BVH-2180(J);	#10001-	BVH-2500(J);	#10001-
BVH-2000(U/C);	#10001 -	BVH-2180(U/C);	#10001-	BVH-2500(U/C);	#10001-
BVH-2000PS;	#10001 -	BVH-2180PS;	#10001-	BVH-2500P;	#10001-
BVH-2000PM;	#10001 -	BVH-2180PM;	#10001-		

AE-03 BOARD (1-606-671-17)

Component Side

BVH-2000PS
BVH-2180PS
(for 04/14 models)

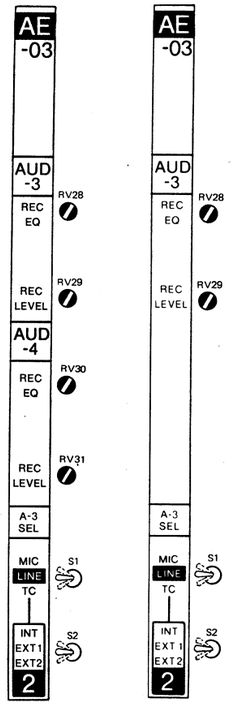

BVH-2000/PS/PM
BVH-2180/PS/PM
(for 02/12/00/10 models)

BVH-2500/P

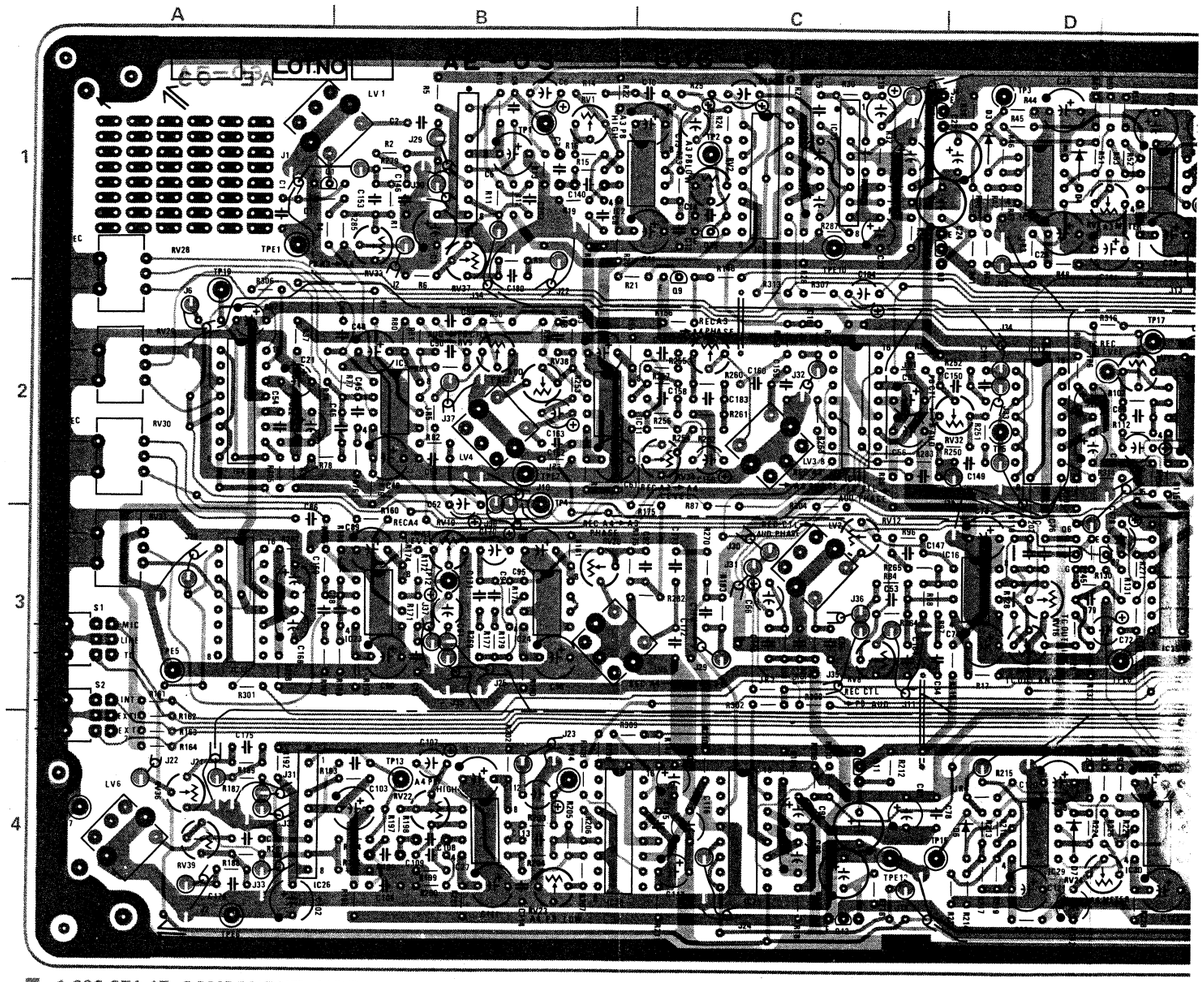

■ 1-606-671-17 COMPONENT SIDE

AE-03 (1-606-671-16 & UP)		
BVH-2000/PM		
BVH-2180/PM		
BVH-2000PS	D1	1A
BVH-2180PS	D3	1D
(00/10/02/12 MODEL)	D4	1D
	D5	3E
BVH-2500/P	D6	4D
	D7	4D
D1 1A	IC1	1B
D3 1D	IC2	1C
D4 1D	IC3	1C
D5 3E	IC4	2A
IC1 1B	IC5	1D
IC2 1C	IC6	1D
IC3 1C	IC7	1E
IC4 2A	IC8	1E
IC5 1D	IC9	2B
IC6 1D	IC10	2C
IC7 1E	IC11	2D
IC8 2B	IC12	2D
IC9 2B	IC13	3A
IC10 2C	IC14	2D
IC11 2D	IC15	2E
IC12 2D	IC16	3D
IC14 2D	IC17	2E
IC15 2E	IC18	3E
IC16 3D	IC19	3E
IC17 2E	IC20	3E
IC18 3E	IC22	2F
IC19 3E	IC23	3D
IC20 2F	IC24	3D
IC22 3F	IC25	4C
IC23 3D	IC26	4A
IC24 3D	IC27	4B
IC25 4C	IC28	4B
IC26 4A	IC29	4D
IC27 4B	IC30	4D
IC28 4B	IC31	4E
IC29 4D	IC32	4E
IC30 4D	IC33	1C
IC31 4E	IC34	2F
IC32 4E	IC35	3D
IC33 1C		
IC34 2F	LV1	1B
IC35 3D	LV2	3C
	LV4	2C
LV1 1B	LV5	2B
LV2 3C	LV6	4A
LV4 2C		
LV5 2B	Q1	1B
LV6 4A	Q2	1D
	Q3	1D
Q1 1B	Q4	1F
Q2 1D	Q5	3D
Q3 1D	Q7	3D
Q4 1F	Q8	3E
Q5 3D	Q9	1C
Q7 3D	Q11	4C
Q8 3E	Q12	4C
Q9 1C	Q13	4F
Q11 4C	Q14	4F
Q12 4C	Q15	1C
Q13 4F		
Q14 4F	S1	3A
Q15 1C	S2	4A
	SW3	4E
S1 3A		
S2 4A	TP1	1B
SW3 4E	TP2	1C
	TP3	1D
TP1 1B	TP4	2B
TP2 1C	TP5	2D
TP3 1D	TP6	2D
TP4 2B	TP7	2E
TP5 2D	TP8	2E
TP6 2D	TP9	4F
TP7 2E	TP10	2F
TP8 2E	TP11	3B
TP9 4F	TP12	3B
TP10 2F	TP13	4B
TP11 3B	TP14	4B
TP12 3B	TP15	4D
TP13 4B	TP16	4F
TP14 4B	TP17	2D
TP15 4D	TP18	2E
TP16 4F	TP19	2A
TP17 2D		
TP18 2E	TPE1	1A
TP19 2A	TPE2	2B
	TPE3	2F
TPE1 1A	TPE4	2F
TPE2 2B	TPE5	3A
TPE3 2F	TPE6	4A
TPE4 2F	TPE7	4A
TPE5 3A	TPE8	3D
TPE6 4A	TPE9	4E
TPE7 4A	TPE10	1C
TPE8 3D	TPE11	1E
TPE9 4E	TPE12	4C
TPE10 1C	TPE13	4E
TPE11 1E		
TPE12 4C		
TPE13 4E		

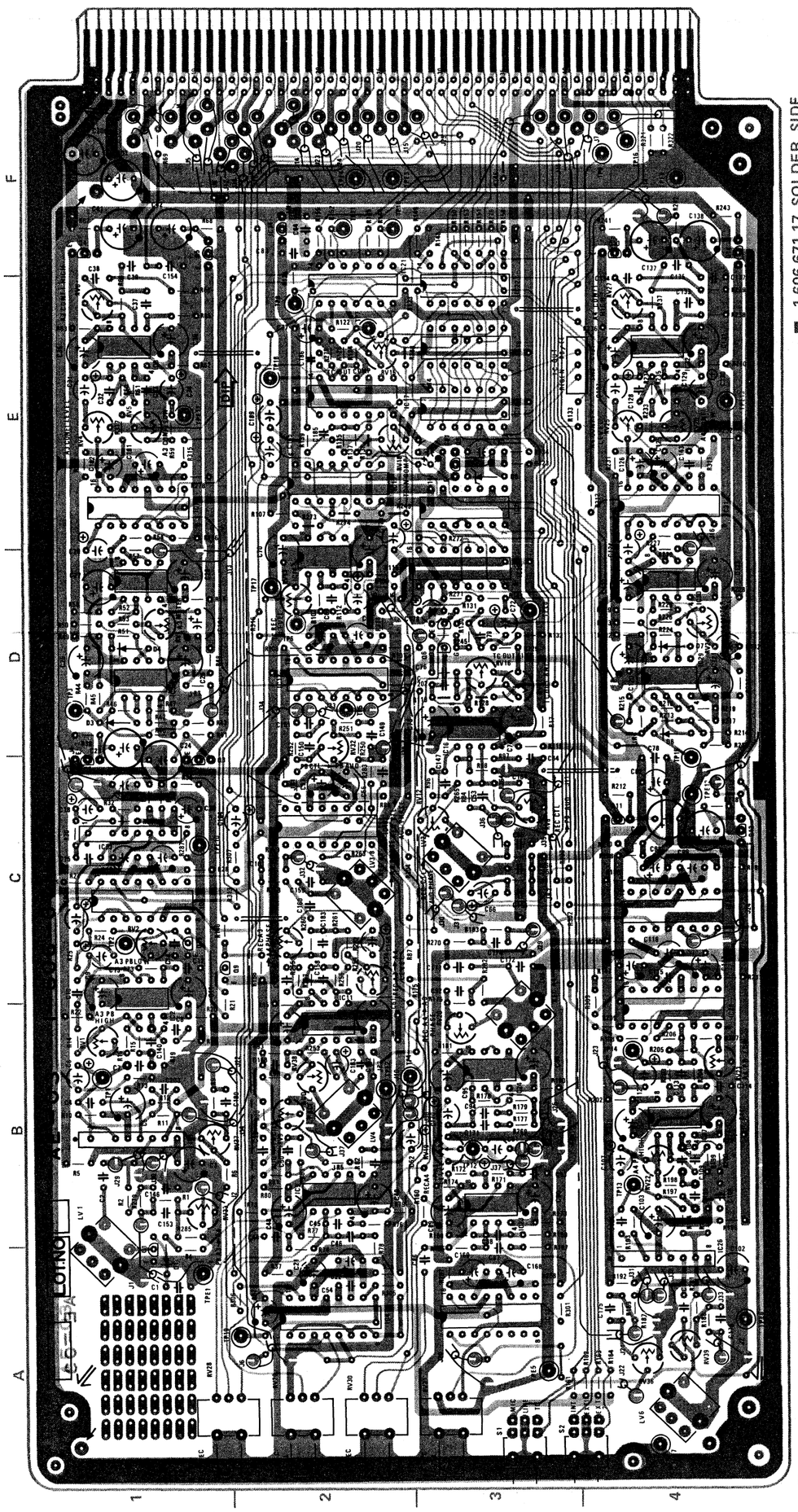

■ 1-606-671-17 SOLDER SIDE

■ 1-606-671-17 COMPONENT SIDE

AE-03 BOARD

Audio-3 REC EQ/PB Amplifier

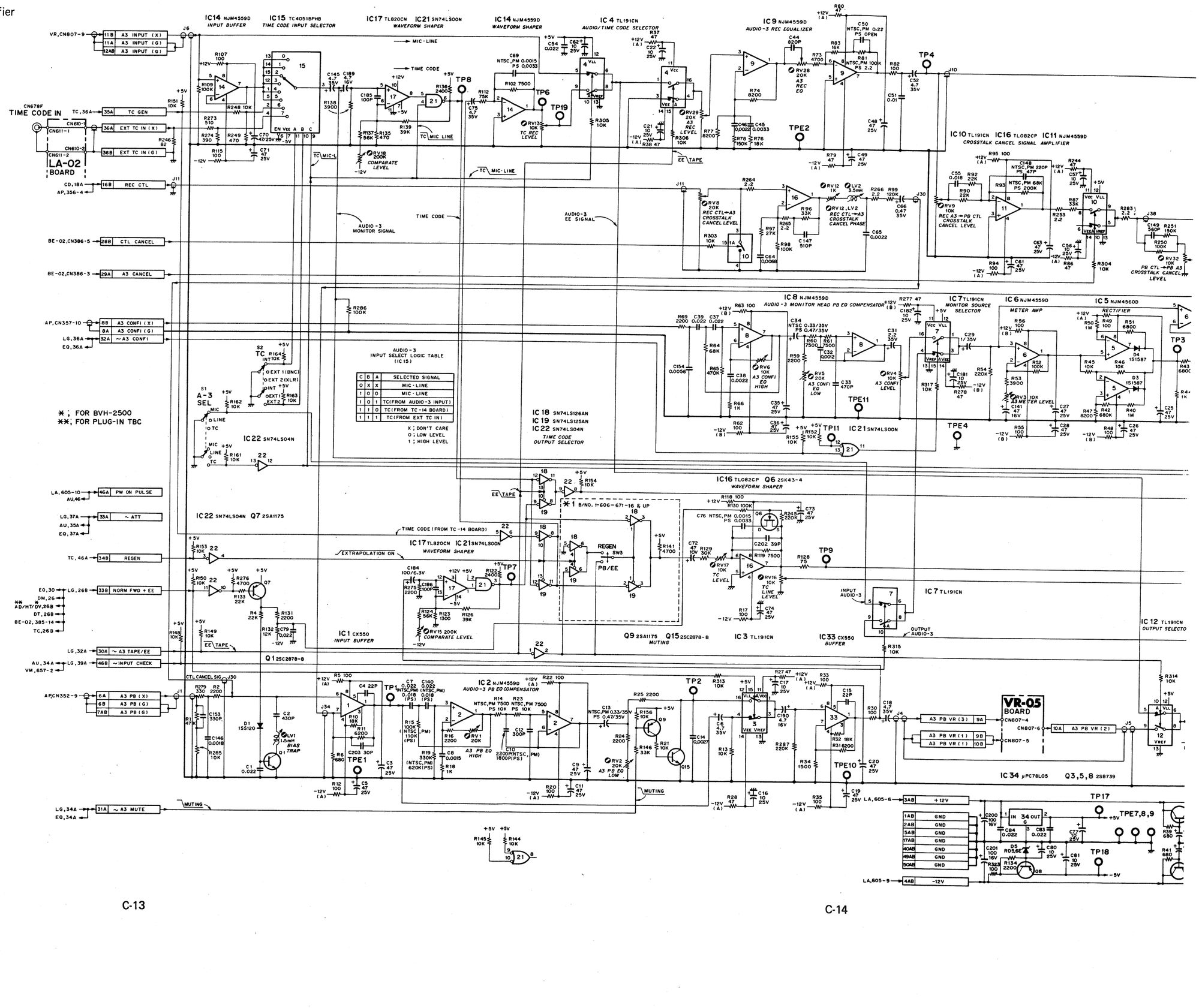

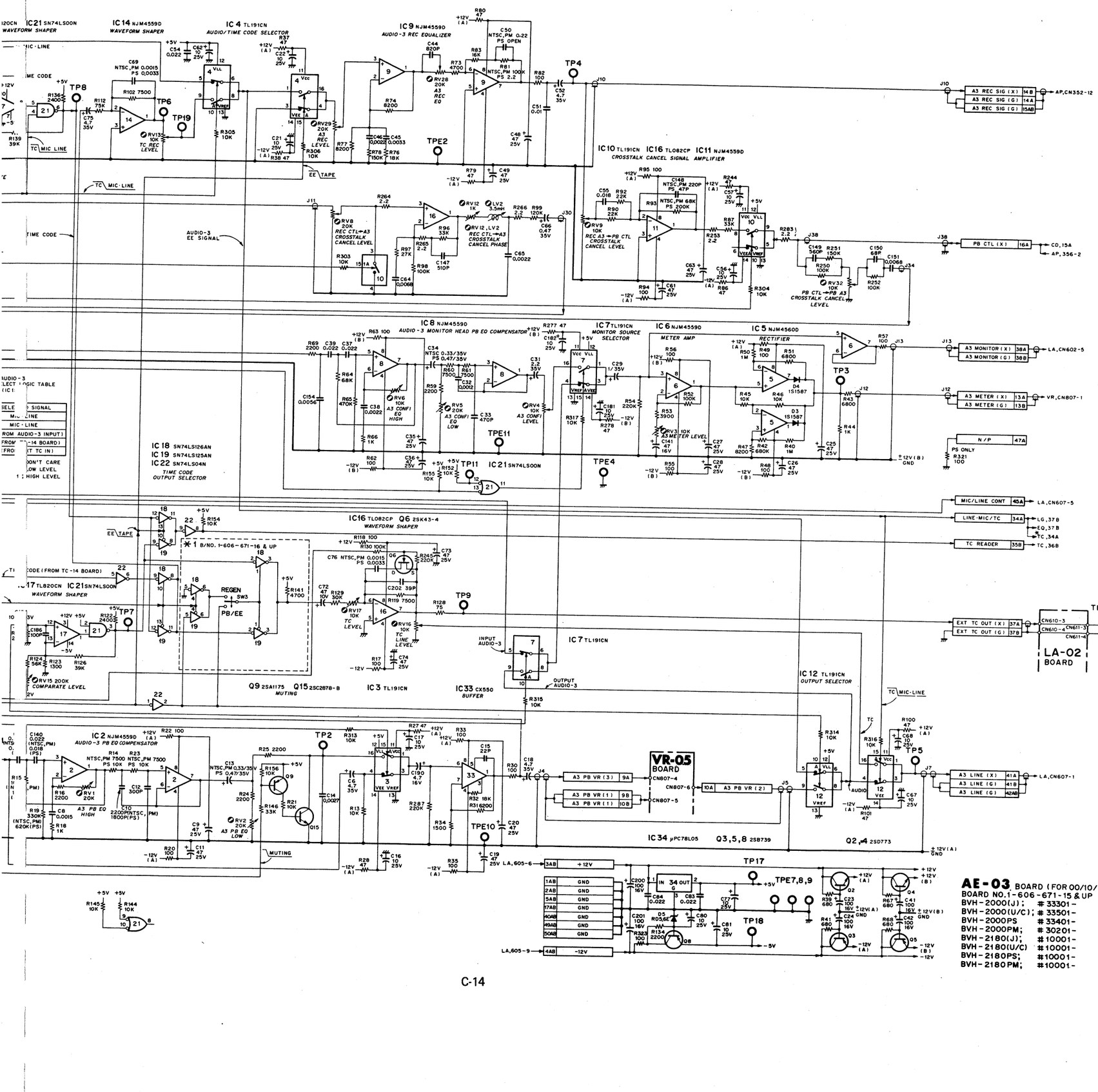

AE-03 BOARD (FOR 00/10/02/12)

BOARD NO.1-606-671-15 & UP

BVH-2000(J);	#33301-	BVH-2500(J);	#10001-
BVH-2000(U/C);	#33501-	BVH-2500(U/C);	#10001-
BVH-2000PS	#33401-	BVH-2500P;	#10001-
BVH-2000PM;	#30201-		
BVH-2180(J);	#10001-		
BVH-2180(U/C)	#10001-		
BVH-2180PS;	#10001-		
BVH-2180PM;	#10001-		

AE-03 BOARD (1/2); FOR 04 MODEL

Audio-3 REC EQ/PB Amplifier

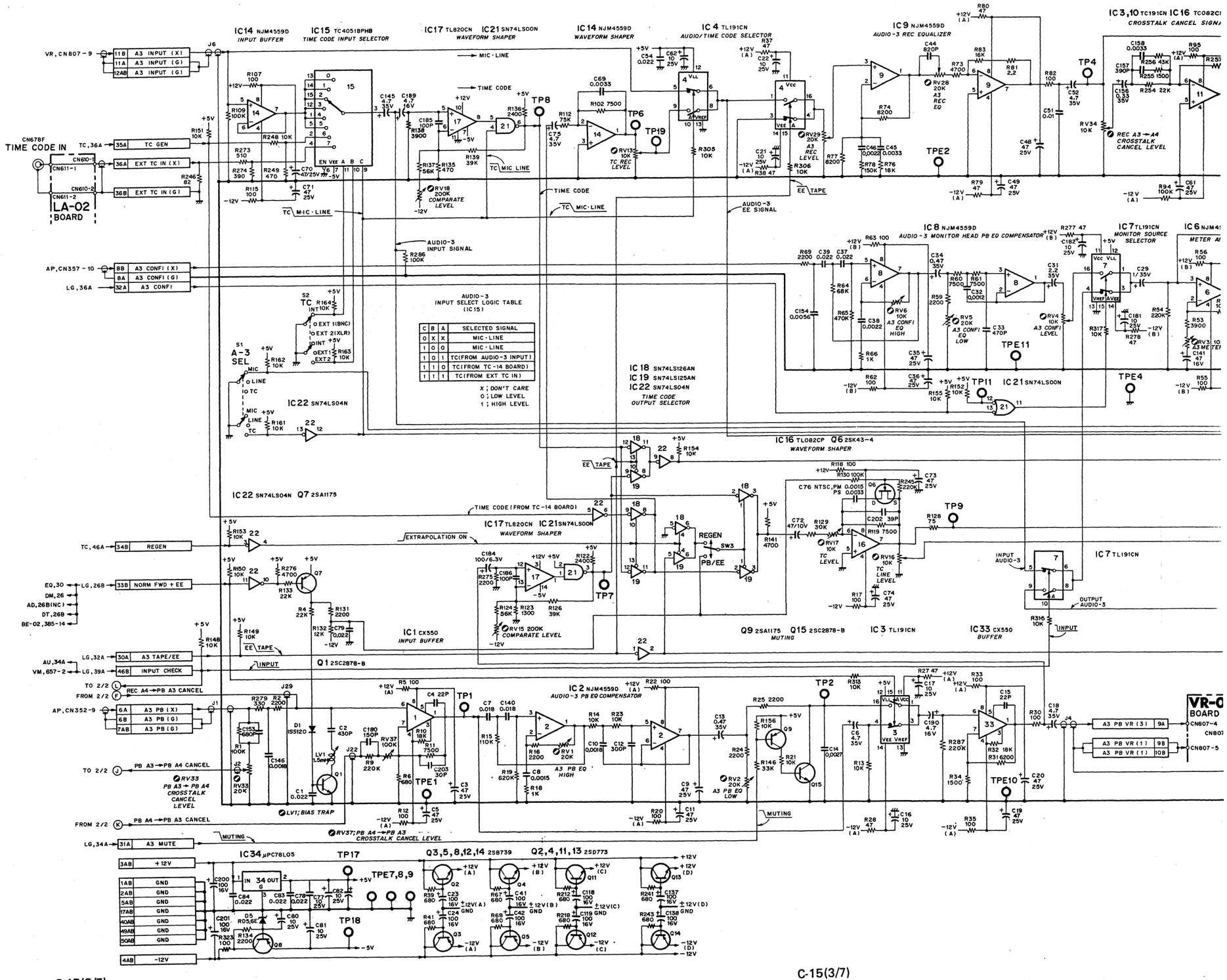

C-15(2/7)

C-15(3/7)

AE-03 (1/2) (FOR 04/14) CARD RACK

IC17 TL820CN IC21 SN74LS00N
WAVEFORM SHAPER

IC14 NJM4559D
WAVEFORM SHAPER

IC 4 TL191CN
AUDIO/TIME CODE SELECTOR

IC 9 NJM4559D
AUDIO-3 REC EQUALIZER

IC3,10 TC191CN IC16 TC082CP IC11 NJM4559D
CROSSTALK CANCEL SIGNAL AMPLIFIER

MIC·LINE

TIME CODE

TC MIC LINE

TIME CODE

TC MIC·LINE

AUDIO-3 EE SIGNAL

AUDIO-3 INPUT SIGNAL

RV18 200K *COMPARATE LEVEL*

RV13 10K *TC REC LEVEL*

RV28 20K *A3 REC EQ*

RV29 20K *A3 REC LEVEL*

RV34 10K *REC A3→A4 CROSSTALK CANCEL LEVEL*

RV35 LV3 3.5mH *REC A3→PB A4 CROSSTALK CANCEL PHASE*

EE TAPE

REC A4→REC A3 CANCEL

REC A3→REC A4 CANCEL

REC A3→PB A4 CANCEL

A3 CANCEL 29A ← BE-02, CN386-3

J10 A3 REC SIG(X) 14B → AP, CN352-12
J10 A3 REC SIG(G) 14A
J10 A3 REC SIG(G) 15AB

(C) TO 2/2

(D) TO 2/2

(E) TO 2/2

AUDIO-3 INPUT SELECT LOGIC TABLE (IC15)

C	B	A	SELECTED SIGNAL
	X	X	MIC·LINE
0	0		MIC·LINE
0	1		TC(FROM AUDIO-3 INPUT)
1	1	0	TC(FROM TC-14 BOARD)
1	1	1	TC(FROM EXT TC IN)

X ; DON'T CARE
0 ; LOW LEVEL
1 ; HIGH LEVEL

IC 8 NJM4559D
AUDIO-3 MONITOR HEAD PB EQ COMPENSATOR

IC 7 TL191CN
MONITOR SOURCE SELECTOR

IC 6 NJM4559D
METER AMP

IC 5 NJM4560D
RECTIFIER

RV6 10K *A3 CONFI EQ HIGH*

RV5 20K *A3 CONFI EQ LOW*

RV4 10K *A3 CONFI LEVEL*

RV3 10K *A3 METER LEVEL*

TP3

J13 A3 MONITOR(X) 38A → LA, CN602-5
J13 A3 MONITOR(G) 38B

J12 A3 METER(X) 13A → VR, CN807-1
J12 A3 METER(G) 13B

N/P 47A
02/04 47B

IC 18 SN74LS126AN
IC 19 SN74LS125AN
IC 22 SN74LS04N
TIME CODE OUTPUT SELECTOR

IC21 SN74LS00N

IC16 TL082CP Q6 2SK43-4
WAVEFORM SHAPER

MIC/LINE CONT 45A → LA, CN607-5

LINE·MIC/TC 34A → LG, 37B

TC READER 35B → TC, 36B

TIME CODE (FROM TC-14 BOARD)

EXTRAPOLATION ON

IC17 TL820CN IC21 SN74LS00N
WAVEFORM SHAPER

REGEN

SW3

PB/EE

IC 7 TL191CN

INPUT AUDIO-3

OUTPUT AUDIO-3

IC 12 TL191CN
OUTPUT SELECTOR

EXT TC OUT(X) 37A
EXT TC OUT(G) 37B

CN687F TIME CODE OUT

LA-02 BOARD

RV15 200K *COMPARATE LEVEL*

Q9 2SA1175 Q15 2SC2878-B
MUTING

IC 3 TL191CN

IC33 CX550
BUFFER

INPUT

TC MIC-LINE

IC 2 NJM4559D
AUDIO-3 PB EQ COMPENSATOR

RV1 20K *A3 PB EQ HIGH*

RV2 20K *A3 PB EQ LOW*

MUTING

VR-07 BOARD

CN807-4
CN807-6
CN807-5

A3 PB VR(3) 9A
A3 PB VR(1) 9B
A3 PB VR(1) 10B
10A A3 PB VR(2)

A3 LINE(X) 41A → LA, CN607-1
A3 LINE(G) 41B
A3 LINE(G) 42AB

Q3,5,8,12,14 2SB739 Q2,4,11,13 2SD773

AE-03 BOARD **(1/2)** (FOR 04/14)
BOARD NO.1-606-671-17 & UP
BVH-2000PS ; #33401-
BVH-2180PS ; #10001-

AE-03 BOARD (2/2); FOR 04/14 MODEL

Audio-4 REC EQ/PB Amplifier

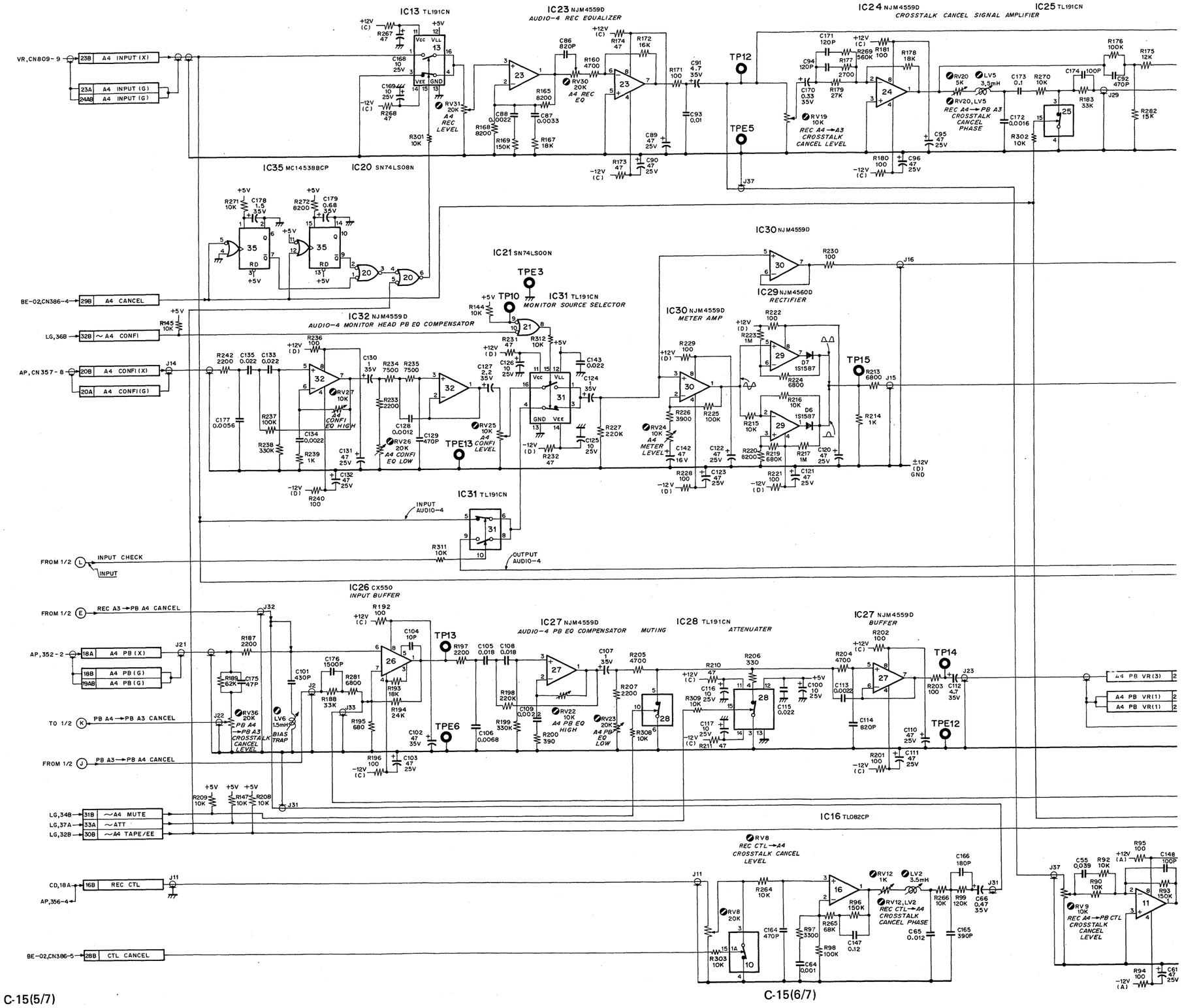

C-15(5/7)

C-15(6/7)

CARD RACK AE-03 (2/2) (FOR 04/14)

IC13 TL191CN

IC23 NJM4559D
AUDIO-4 REC EQUALIZER

IC24 NJM4559D
CROSSTALK CANCEL SIGNAL AMPLIFIER

IC25 TL191CN

IC20 SN74LS08N

IC21 SN74LS00N

IC30 NJM4559D

IC29 NJM4560D
RECTIFIER

IC32 NJM4559D
AUDIO-4 MONITOR HEAD PB EQ COMPENSATOR

IC31 TL191CN
MONITOR SOURCE SELECTOR

IC30 NJM4559D
METER AMP

TP12 TPE5 TP10 TPE3 TP13 TPE13 TP15

J25 A4 REC SIG(X) 26B → AP,CN352-5
A4 REC SIG(G) 26A
A4 REC SIG(G) 27AB
REC A4→REC A3 CANCEL (C) TO 1/2
REC A4→PB A3 CANCEL (F) TO 1/2
(D) FROM 1/2

J16 A4 MONITOR(X) 39A → LA,CN602-7
A4 MONITOR(G) 39B

J15 A4 METER(X) 25A → VR,CN809-1
A4 METER(G) 25B

IC31 TL191CN
INPUT AUDIO-4
OUTPUT AUDIO-4

IC25 TL191CN
AUDIO-4 OUTPUT SELECTOR

IC26 CX550
INPUT BUFFER

IC27 NJM4559D
AUDIO-4 PB EQ COMPENSATOR

IC28 TL191CN
MUTING ATTENUATER

IC27 NJM4559D
BUFFER

TP14 TP16 TP18 TPE6 TPE12

VR-07 BOARD
A4 PB VR(3) 21A
A4 PB VR(1) 21B
A4 PB VR(1) 22B
CN809-4
CN809-6
CN809-5
22A A4 PB VR(2) J24

J18 A4 OUTPUT(X) 43A → LA,CN607-3
A4 OUTPUT(G) 43B
A4 OUTPUT(G) 44AB

AE-03 BOARD (2/2) (FOR 04/14)
BOARD NO. 1-606-671-13,14 & UP
BVH-2000PS; #10001-
BVH-2180PS; #10001-

IC16 TL082CP

C-15(6/7)

IC11 NJM4559D
IC10 TL191CN
IC16 TL082CP
CROSSTALK CANCEL

PB CTL 16A → CD,15A
AP,356-2

C-15(7/7)

EQ-11 BOARD (1-619-212-11)

Component Side

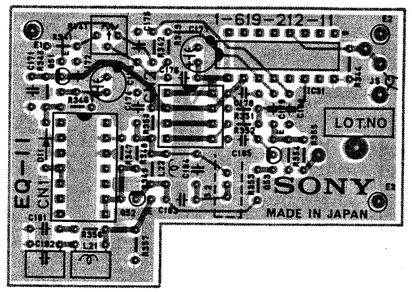

■ 1-619-212-11 COMPONENT SIDE
■ 1-619-212-11 SOLDER SIDE

EQ-02 BOARD (1-606-659-15)

Component Side

(For 10, 12, 14 MODEL)

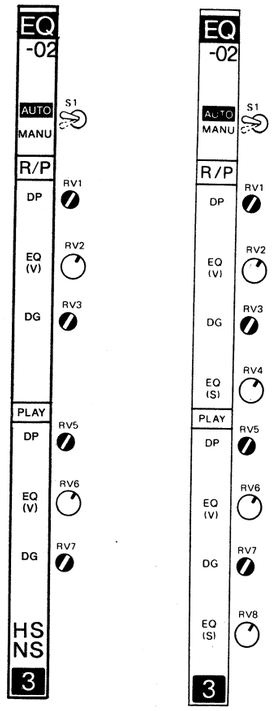

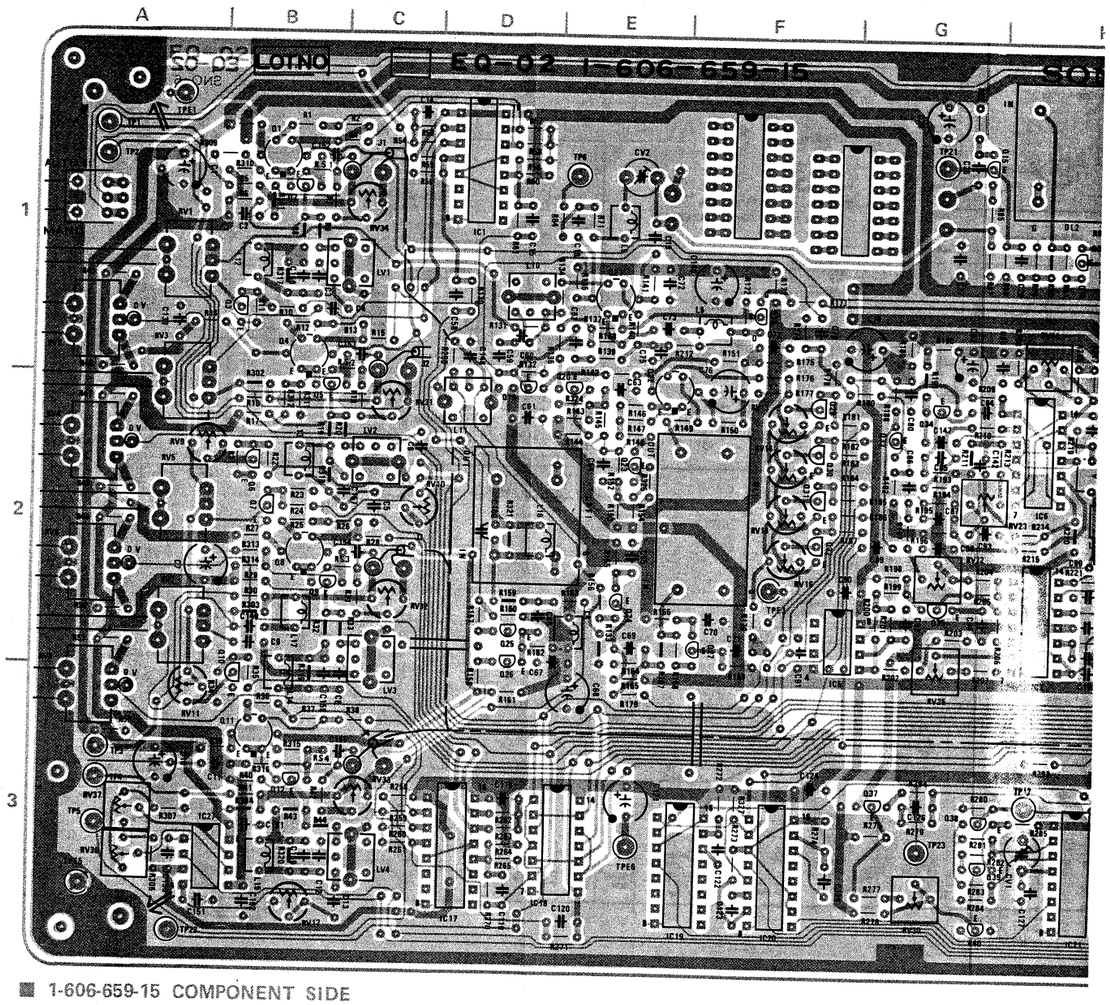

■ 1-606-659-15 COMPONENT SIDE

This board is used only with EQ-02 older than Part No. 1-606-659-15

SW-81 BOARD (1-612-751-11)

Solder Side

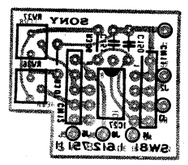

■ 1-612-751-11
SOLDER SIDE

For PS

■ 1-606-659-15 COMPONENT SIDE

■ 1-606-659-15 SOLDER SIDE

ily with

12-751-11)

■ 1-612-751-11
SOLDER SIDE

EQ-02 (1-606-659-15 & UP)

BVH-2000/PS/PM
BVH-2180/PS/PM
BVH-2500/P

CV1	3H
(NTSC,PM)	
CV2	1E
D1	2H
D2	2J
D3	2J
D5	2K
D6	2J
DL1	2F
DL2	1H
IC1	1D
IC3	1J
IC4	1L
IC5	2F
IC6	2H
IC7	2H
IC8	2H
IC9	2J
IC10	2J
IC11	2K
IC12	2K
IC13	2K
IC14	2L
IC15	2L
IC16	2L
IC17	3D
IC18	3D
IC19	3E
IC20	3F
IC21	3H
IC22	3H
IC23	3J
IC24	3K
IC25	3K
IC26	3L
(PS/P)	
IC27	3B
JP1	3J
JP2	3J
JP3	2J
LV1	1C
LV2	2C
LV3	2C
LV4	3C
Q1	1B
Q2	1B
Q3	1B
Q4	1B
Q5	2B
Q6	2B
Q7	2B
Q8	2B
Q9	2B
Q10	3B
Q11	3B
Q12	3B
Q15	1G
Q16	1H
Q17	1J
Q18	1K
Q19	2D
Q20	2E
Q21	1E
Q22	2E
Q23	2E
Q24	2E
Q25	2D
Q26	2D
Q27	2E
Q28	1F
Q29	2F
Q30	2F
Q31	2F
Q32	2F
Q33	2G
Q34	2G
Q35	2G
Q36	2J
Q37	3G
Q38	3G
Q39	3G
Q40	3G
Q41	1K
RV1	1A
RV2	1A
RV3	2A
RV4	2A
RV5	2A
RV6	2A
RV7	2A
RV8	3A
RV9	2A
RV10	2C
RV11	3A
RV12	3B
RV13	2F
RV14	2F
RV16	2F
RV18	2F
RV22	2G
RV23	2G
RV24	1H
RV25	2G
RV26	2J
RV27	2K
RV28	2K
RV30	3G
RV31	2C
RV32	2C
RV33	3C
RV34	1C
RV35	1K
(PS/P)	
RV36	3A
RV37	3A
S1	1A
TH1	1K
TP1	1A
TP2	1A
TP3	3A
TP4	3A
TP5	3A
(NTSC,PM)	
TP6	1E
TP8	1K
TP10	2H
TP11	2J
TP12	3H
TP15	3M
TP16	3M
TP21	1G
TP22	3A
TP23	3G
TPE1	1A
TPE2	2K
TPE3	2F
TPE4	2M
TPE5	3A
TPE6	3E

C-18
C-17
C-16
VH-2000/PS/PM
BVH-2180/PS/PM
C-18
C-17
C-16
BVH-2500/P

2000PS; #22301 – 34699
2180PS; #10001 – 10599
2500P; #10001 – 10699

1-606-659-14, 15

CARD RACK **EQ-02**

EQ-02 CARD RACK

1-606-659-14, 15

2000PS; #22301 – 34699
2180PS; #10001 – 10599
2500P; #10001 – 10699

EQ-02 BOARD

Video/Sync PB Equalizer

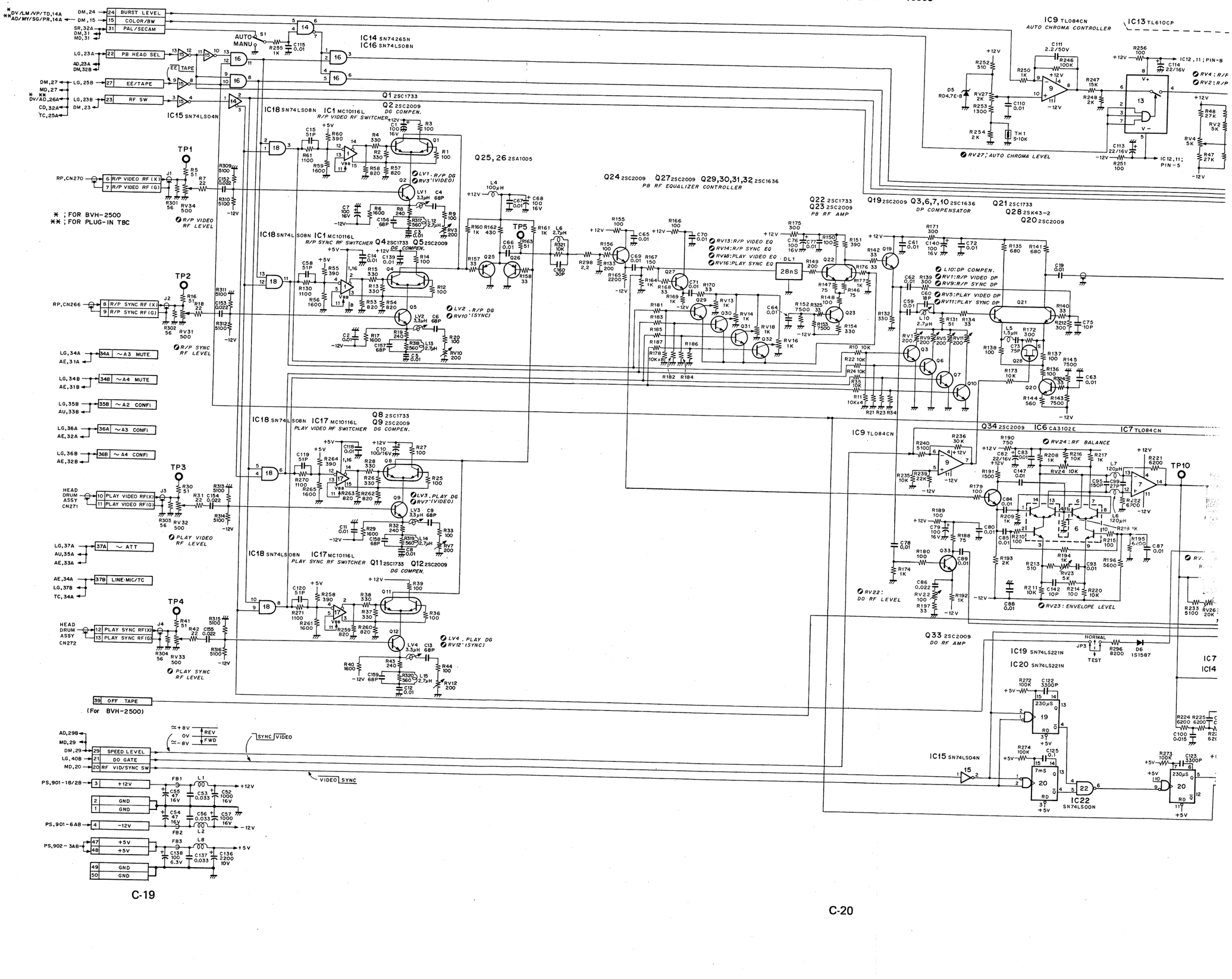

C-19

C-20

2000PS; #22301 – 34699
2180PS; #10001 – 10599
2500P; #10001 – 10699 1-606-659-14, 15 CARD RACK EQ-02

IC9 TL084CN AUTO CHROMA CONTROLLER
IC13 TL610CP
IC12 TL607CP
IC11 TL607CP
IC9 TL084CN
IC3 MC1595L
EQ CONTROLLER
RV28:EQ CONT
RV4:R/P SYNC EQ
RV2:R/P VIDEO EQ
RV8:PLAY SYNC EQ
RV6:PLAY VIDEO EQ
RV27:AUTO CHROMA LEVEL
Q25,26 2SA1005
Q24 2SC2009 Q27 2SC2009 Q29,30,31,32 2SC1636
PB RF EQUALIZER CONTROLLER
Q22 2SC1733
Q23 2SC2009
PB RF AMP
Q19 2SC2009 Q3,6,7,10 2SC1636
DP COMPENSATOR
Q21 2SC1733
Q28 2SK43-2
Q20 2SC2009
RV13:R/P VIDEO EQ
RV14:R/P SYNC EQ
RV18:PLAY VIDEO EQ
RV16:PLAY SYNC EQ
L10:DP COMPEN.
RV1:R/P VIDEO DP
RV9:R/P SYNC DP
RV5:PLAY VIDEO DP
RV11:PLAY SYNC DP
Q15 2SC2009
Q17 2SK43-3
Q16 2SC2009
Q41 2SC1733
Q18 2SC2009
IC4 AM685DL
PB RF LIMITER
RV35 MOIRÉ
IC8 SN75107AN
Q37,040 2SC2009
IC21 MC10198L
Q38,39 2SA1005
IC27 TL601CP
RV36; PLAY HEAD MOIRÉ
RV37; R/P HEAD MOIRÉ
IC9 TL084CN
Q34 2SC2009
IC6 CA3102E
IC7 TL084CN
RV24:RF BALANCE
IC24 SN74LS00N
IC25 SN74LS123N
IC23 SN74128N
RV26:DO LEVEL
RV22: DO RF LEVEL
RV23:ENVELOPE LEVEL
RV30:SHUTTLE DO FREQ
CV1:DO FREQ
IC22 SN74LS00N
Q36 2SK43-2
Q33 2SC2009
DO RF AMP
IC19 SN74LS221N
IC20 SN74LS221N
IC7 TL084CN
IC14 SN74265N
IC9 TL084CN
IC10 TL082CP
IC7 TL084CN
IC15 SN74LS04N
IC22 SN74LS00N
RV25: RF ENVELO LEVEL
Q35 2SC1636
IC5 TL082CP
IC25 SN74LS123N
IC24 SN74LS00N
IC26 SN74LS123N
IC14 SN74265N

TP5 TP8 TP10 TP11 TP12 TP13 TP14 TP15 TP16 TP17 TP18 TP19

DROPOUT (TBC) 44 → TO TBC CN640-6
DROPOUT-1 19 → DM,19
DROPOUT-2 40 → DM,40 AD,27B
DO SIG OUT 45 → CN684 DO SIG (CN PANEL)
NORM FWD+EE 30 → LG,26B AE,33B DM,26 AD,26B DT,26B BE-02,385-14 TC,26B
SYNC LACK 26 → LG,26A
VIDEO LACK 25 → LG,24B
RF ENVELOPE 28 → DT,28A
RF LEVEL 14 → MD,14
RF ENVELOPE(X) 42 → VM,657-10
RF ENVELOPE(G) 43
PB RF (X) 16 → DM,16
PB RF (Y) 17 → DM,17
GND 18 → DM,18

EQ-02 BOARD
BOARD NO. 1-606-659-14,15
BVH-2000PS(AEP); # 22301-34699
BVH-2180PS(AEP); # 10001-10599
BVH-2500P(AEP); # 10001-10699

EQ-02 BOARD

Video/Sync PB Equalizer

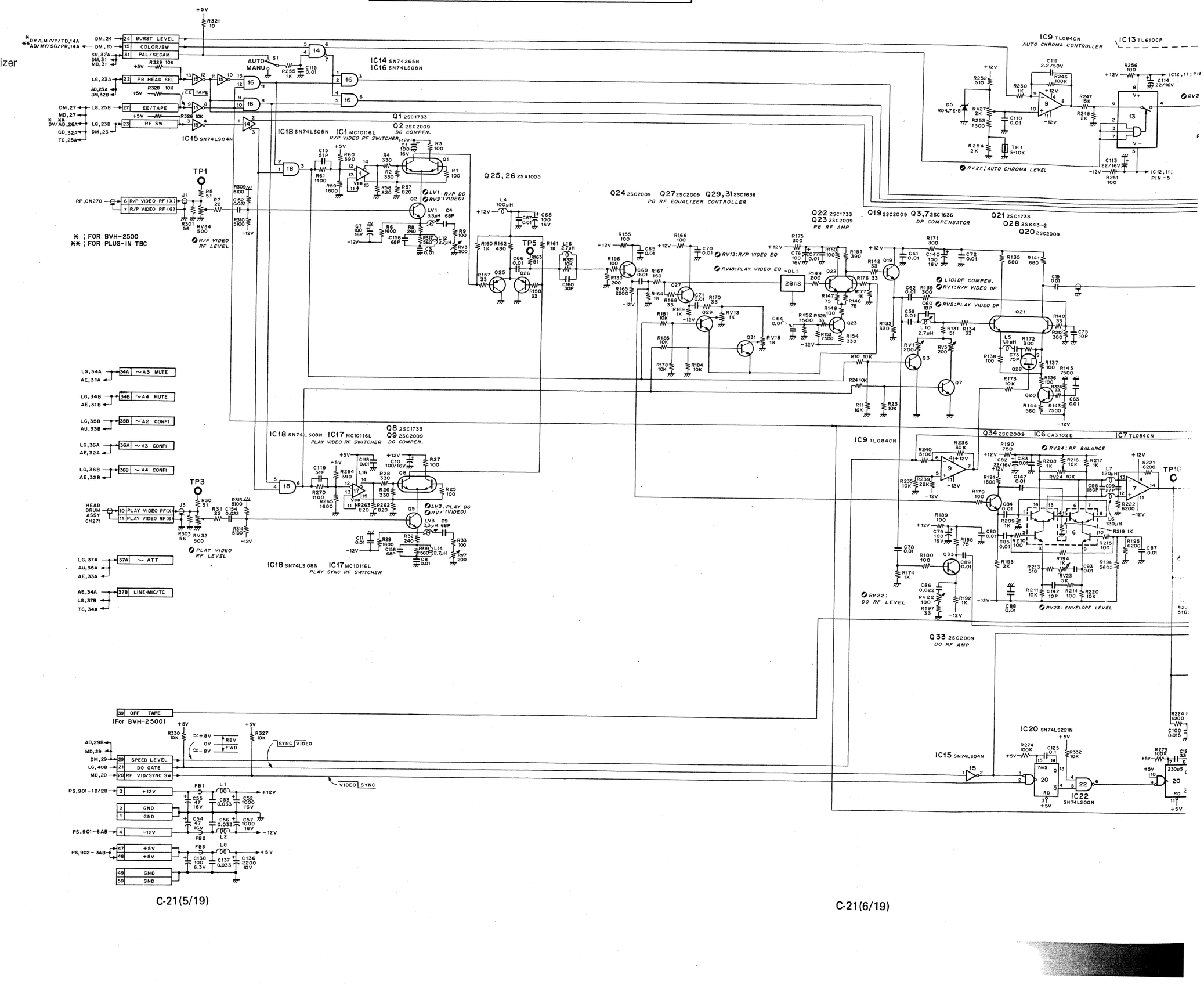

C-21(5/19)

C-21(6/19)

IC9 TL084CN AUTO CHROMA CONTROLLER
IC13 TL610CP
IC12 TL607CP
EQ CONTROLLER
IC11 TL607CP
IC9 TL084CN
IC3 MC1595L

RV27: AUTO CHROMA LEVEL
RV2: R/P VIDEO EQ
RV6: PLAY VIDEO EQ
RV28: EQ CONT

Q25, 26 2SA1005
Q24 2SC2009 Q27 2SC2009 Q29, 31 2SC1636
PB RF EQUALIZER CONTROLLER
Q22 2SC1733
Q23 2SC2009
PB RF AMP
Q19 2SC2009 Q3, 7 2SC1636
DP COMPENSATOR
Q21 2SC1733
Q28 2SK43-2
Q20 2SC2009
Q15 2SC2009
Q17 2SK43-3
Q16 2SC2009
Q41 2SC1733
Q18 2SC2009
IC4 AM685DL
PB RF LIMITER

RV13: R/P VIDEO EQ
RV48: PLAY VIDEO EQ
L10: DP COMPEN.
RV1: R/P VIDEO DP
RV5: PLAY VIDEO DP
RV35 MOIRÉ

IC8 SN75107AN
Q37, Q47 2SC2009
IC21 MC10198L
Q38, 39 2SA1005
IC27 TL601CP
RV36; PLAY HEAD MOIRÉ
RV37; R/P HEAD MOIRÉ

IC9 TL084CN
Q34 2SC2009 IC6 CA3102E IC7 TL084CN
RV24: RF BALANCE
RV22: DO RF LEVEL
RV23: ENVELOPE LEVEL
RV26: DO LEVEL
RV30: SHUTTLE DO FREQ
RV1: DO FREQ
Q36 2SK43-2
Q33 2SC2009
DO RF AMP
IC24 SN74LS00N
IC25 SN74LS123N
IC23 SN74128N
IC22 SN74LS00N
IC20 SN74LS221N
IC15 SN74LS04N
IC22 SN74LS00N
IC7 TL084CN
IC14 SN74265N
IC9 TL084CN
IC10 TL082CP
IC7 TL084CN
IC5 TL082CP
Q35 2SC1636
IC25 SN74LS123N
IC24 SN74LS00N
IC26 SN74LS123N
IC14 SN74265N

RV25: RF ENVELO LEVEL

TP5 TP8 TP10 TP11 TP12 TP13 TP14 TP15 TP16 TP17 TP18 TP19 TP21 TP23

PB RF (X) 16 → DM, 16
PB RF (Y) 17 → DM, 17
GND 18 → DM, 18

DROPOUT (TBC) 44 → TO TBC CN645
DROPOUT-1 19 → DM, 19
DROPOUT-2 40 → DM, 40 / AD, 27B
DO SIG OUT 45 → CN684 DO SIG (CN PANEL)
NORM FWD+EE 30 → LG, 26B / AE, 33B / DM, 26 / AD, 26B / DT, 26B / BE-02, 385-14 / TC, 26B
SYNC LACK 26 → LG, 26A
VIDEO LACK 25 → LG, 24B
RF ENVELOPE 28 → DT, 28A
RF LEVEL 14 → MD, 14
RF ENVELOPE (X) 42 → VM, 657-10
RF ENVELOPE (G) 43

EQ-02 BOARD (FOR 10/12/14)
BOARD NO. 1-606-659-14, 15
BVH-2000PS(AEP); # 34301-34699

EQ-11 BOARD (1-619-212-11)

Component Side

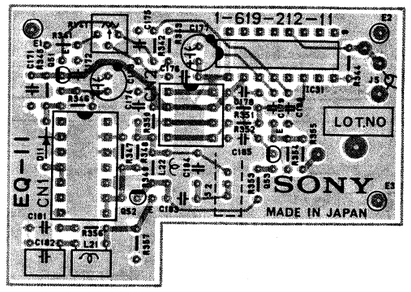

■ 1-619-212-11 COMPONENT SIDE

■ 1-619-212-11 SOLDER SIDE

EQ-02 BOARD (1-606-659-17)

Component Side

(For 10, 12, 14 MODEL)

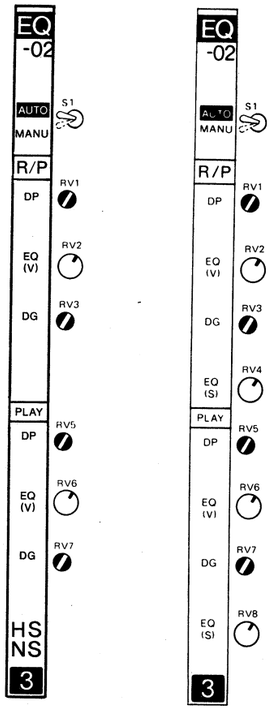

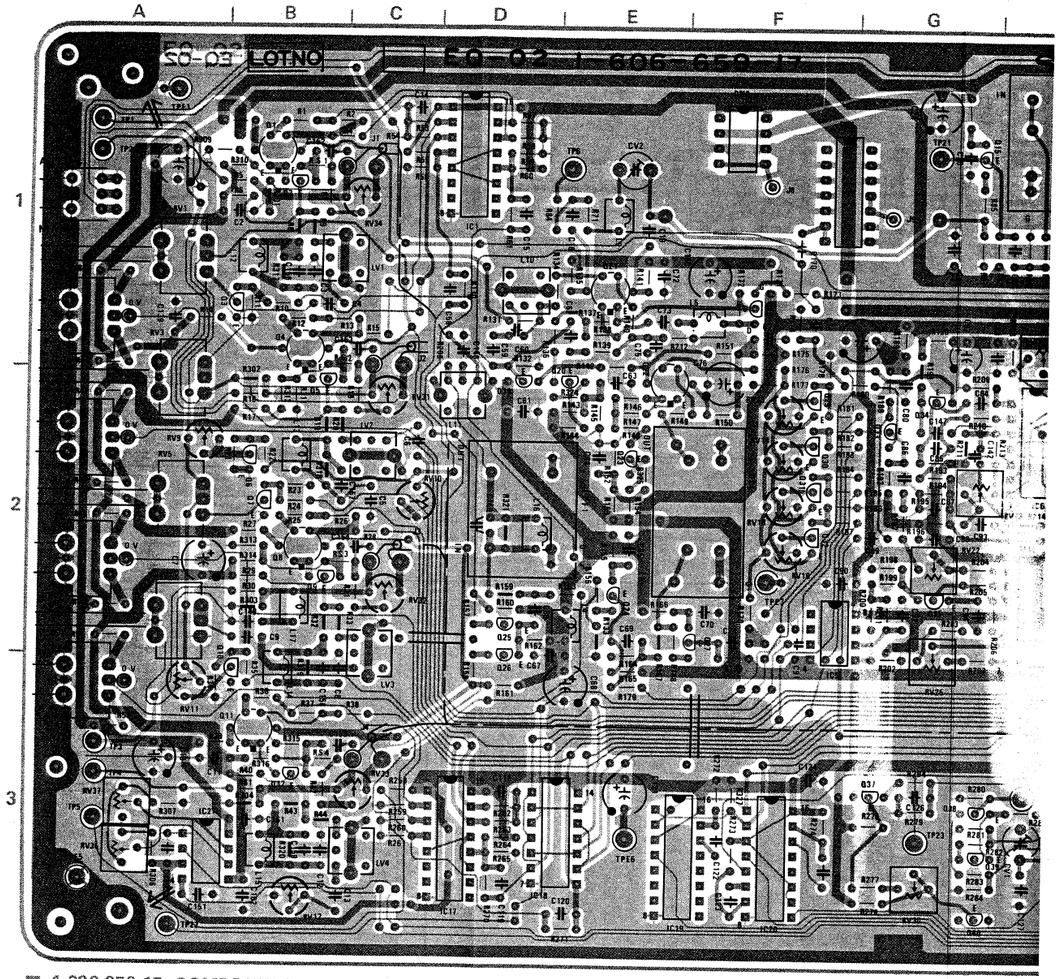

■ 1-606-659-17 COMPONENT SIDE

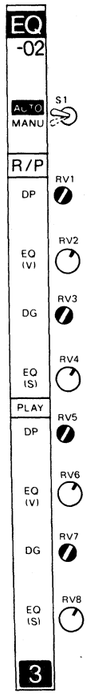

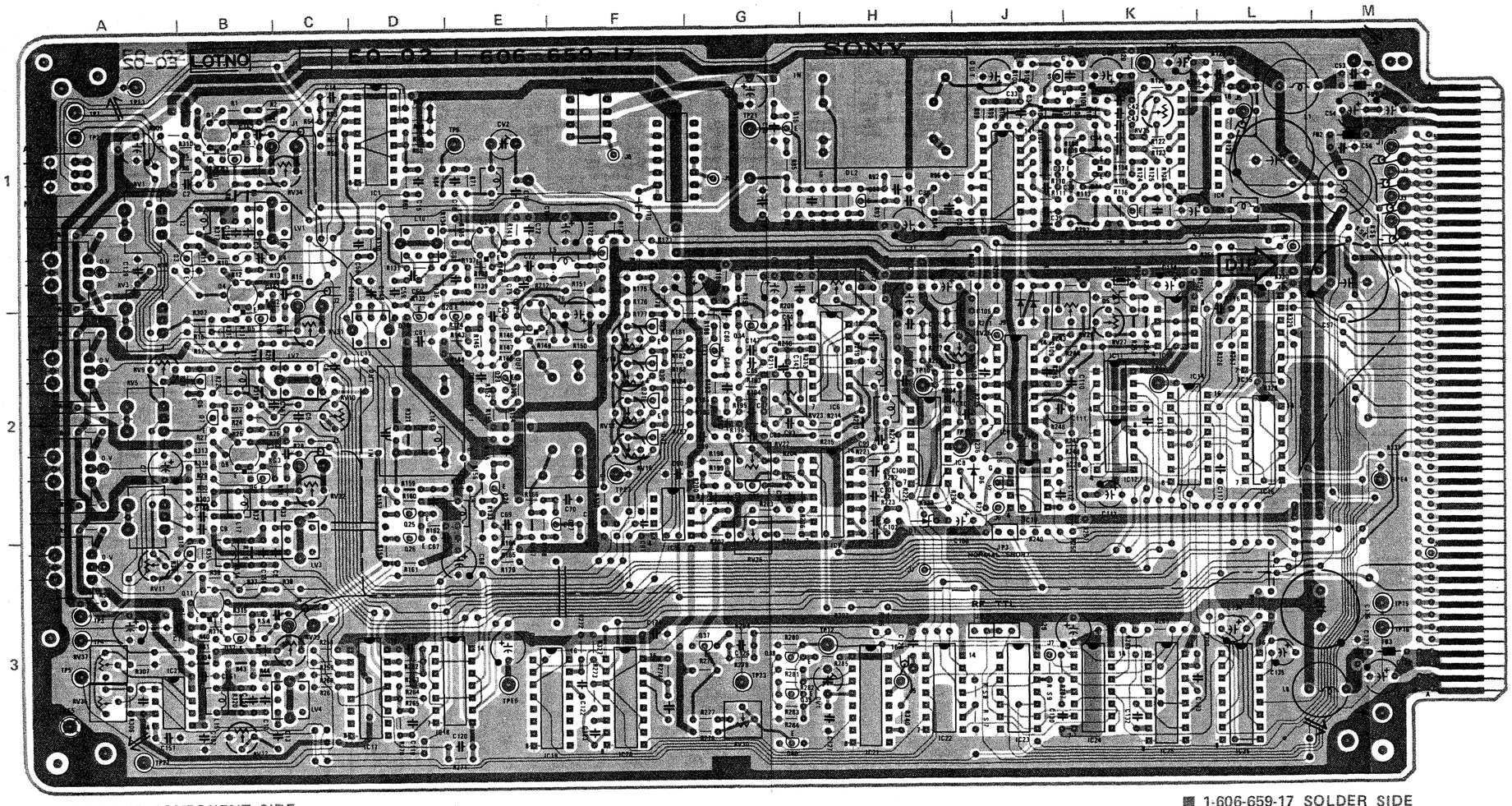

■ 1-606-659-17 COMPONENT SIDE

■ 1-606-659-17 SOLDER SIDE

EQ-02 (1-606-659-16 & up)

BVH-2000/PS/PM
BVH-2180/PS/PM
BVH-2500/P

CV1	3H	Q30	2F
		Q31	2F
(NTSC,PM)		Q32	2F
CV2	1E	Q33	2G
		Q34	2G
D1	2H	Q35	2G
D2	2J	Q36	2J
D3	2J	Q37	3G
D5	2K	Q38	3G
D6	2J	Q39	3G
		Q40	3G
DL1	2F	Q41	1K
DL2	1H		
		RV1	1A
IC1	1D	RV2	1A
IC3	1J	RV3	2A
IC4	1L	RV4	2A
IC5	2F	RV5	2A
IC6	2H	RV6	2A
IC7	2H	RV7	2A
IC8	2H	RV8	3A
IC9	2J	RV9	2A
IC10	2J	RV10	2C
IC11	2K	RV11	3A
IC12	2K	RV12	3B
IC13	2K	RV13	2F
IC14	2L	RV14	2F
IC15	2L	RV16	2F
IC16	2L	RV18	2F
IC17	3D	RV22	2G
IC18	3D	RV23	2G
IC19	3E	RV24	1H
IC20	3F	RV25	2G
IC21	3H	RV26	2J
IC22	3H	RV27	2K
IC23	3J	RV28	2K
IC24	3K	RV30	3G
IC25	3K	RV31	2C
IC26	3L	RV32	2C
		RV33	3C
(PS/P)		RV34	1C
IC27	3B	RV35	1K
JP1	3J	(PS/P)	
JP2	3J	RV36	3A
JP3	2J	RV37	3A
LV1	1C	S1	1A
LV2	2C		
LV3	2C	TH1	1K
LV4	3C		
		TP1	1A
Q1	1B	TP2	1A
Q2	1B	TP3	3A
Q3	1B	TP4	3A
Q4	1B	TP5	3A
Q5	2B		
Q6	2B	(NTSC,PM)	
Q7	2B	TP6	1E
Q8	2B		
Q9	2B	TP8	1K
Q10	3B	TP10	2H
Q11	3B	TP11	2J
Q12	3B	TP12	3H
Q15	1G	TP15	3M
Q16	1H	TP16	3M
Q17	1J	TP21	1G
Q18	1K	TP22	3A
Q19	2D	TP23	3G
Q20	2E		
Q21	1E	TPE1	1A
Q22	2E	TPE2	2K
Q23	2E	TPE3	2F
Q24	2E	TPE4	2M
Q25	2D	TPE5	3A
Q26	2D	TPE6	3E
Q27	2E		
Q28	1F		
Q29	2F		

EQ-02 BOARD

Video/Sync PB Equalizer

BVH-2000PS; UPTO # 35399
BVH-2180PS; UPTO # 10799

IC15 – 8pin
IC24 SN74LS00N
IC25 SN74LS123N
IC23 SN74128N

NORM FWD+EE 30

LG, 26B
AE, 33B
DM, 26
AD, 26B
DT, 26B
BE-02, 385-14
TC, 26B

* ; FOR BVH-2500
** ; FOR PLUG-IN TBC

IC14 SN74265N
IC16 SN74LS08N
IC15 SN74LS04N
IC18 SN74LS08N
IC1 MC10116L R/P VIDEO RF SWITCHER
IC18 SN74LS08N IC1 MC10116L R/P SYNC RF SWITCHER
IC18 SN74LS08N IC17 MC10116L PLAY VIDEO RF SWITCHER
IC18 SN74LS08N IC17 MC10116L PLAY SYNC RF SWITCHER
IC9 TL084CN AUTO CHROMA CONTROLLER
IC13 TL610CP
IC12 TL607C
IC7 TL084CN
IC6 CA3102E
IC19 SN74LS221N
IC20 SN74LS221N
IC22 SN74LS00N

Q1 2SC1733
Q2 2SC2009 DG COMPEN.
Q25, 26 2SA1005
Q24 2SC2009 Q27 2SC2009 Q29,30,31,32 2SC1636 PB RF EQUALIZER CONTROLLER
Q22 2SC1733 Q23 2SC2009 PB RF AMP
Q19 2SC2009 Q3,6,7,10 2SC1636 DP COMPENSATOR
Q21 2SC1733 Q28 2SK43-2 Q20 2SC2009
Q4 2SC1733 Q5 2SC2009 DG COMPEN.
Q8 2SC1733 Q9 2SC2009 DG COMPEN.
Q11 2SC1733 Q12 2SC2009 DG COMPEN.
Q34 2SC2009
Q33 2SC2009 DO RF AMP
Q52 2SC2603

TP1 TP2 TP3 TP4 TP5 TP10 TP11

RP, CN270 R/P VIDEO RF (X) (G)
RP, CN266 R/P SYNC RF (X) (G)
HEAD DRUM ASSY CN271 PLAY VIDEO RF (X) (G)
HEAD DRUM ASSY CN272 PLAY SYNC RF (X) (G)

LG, 34A AE, 31A ~A3 MUTE
LG, 34B AE, 31B ~A4 MUTE
LG, 35B AU, 33B ~A2 CONFI
LG, 36A AE, 32A ~A3 CONFI
LG, 36B AE, 32B ~A4 CONFI
LG, 37A AU, 35A AE, 33A ~ ATT
AE, 34A LG, 37B TC, 34A LINE-MIC/TC
39 OFF TAPE (For BVH-2500)

AD, 29B MD, 29 DM, 29 LG, 40B MD, 20 SPEED LEVEL, DO GATE, RF VID/SYNC SW
PS, 901-1B/2B +12V GND GND
PS, 901-6AB -12V
PS, 902-3AB +5V +5V GND GND

SYNC VIDEO
VIDEO SYNC

RV1 : R/P VIDEO EQ
RV2 : R/P VIDEO EQ
RV3 : (VIDEO)
RV4 : R/P SYNC EQ
RV5 : PLAY VIDEO EQ
RV6 : PLAY SYNC EQ
RV7 : (SYNC)
RV8 : PLAY VIDEO EQ
RV9 : PLAY SYNC EQ
RV10 : (SYNC)
RV11 : PLAY SYNC EQ
RV12 : (SYNC)
RV13 : R/P VIDEO EQ
RV14 : R/P SYNC EQ
RV15 : PLAY VIDEO EQ
RV16 : PLAY SYNC EQ
RV17 : DP COMPEN.
RV18 : DP COMPEN.
RV19 : R/P VIDEO DP
RV20 : R/P SYNC DP
RV21 : PLAY VIDEO DP
RV22 : DO RF LEVEL
RV23 : ENVELOPE LEVEL
RV24 : RF BALANCE
RV26 : DO LEVEL
RV27 : AUTO CHROMA LEVEL

EQ-11 BOARD

C-21(11/19)

C-21(12/19)

1-606-659-15 & UP CARD RACK EQ-02

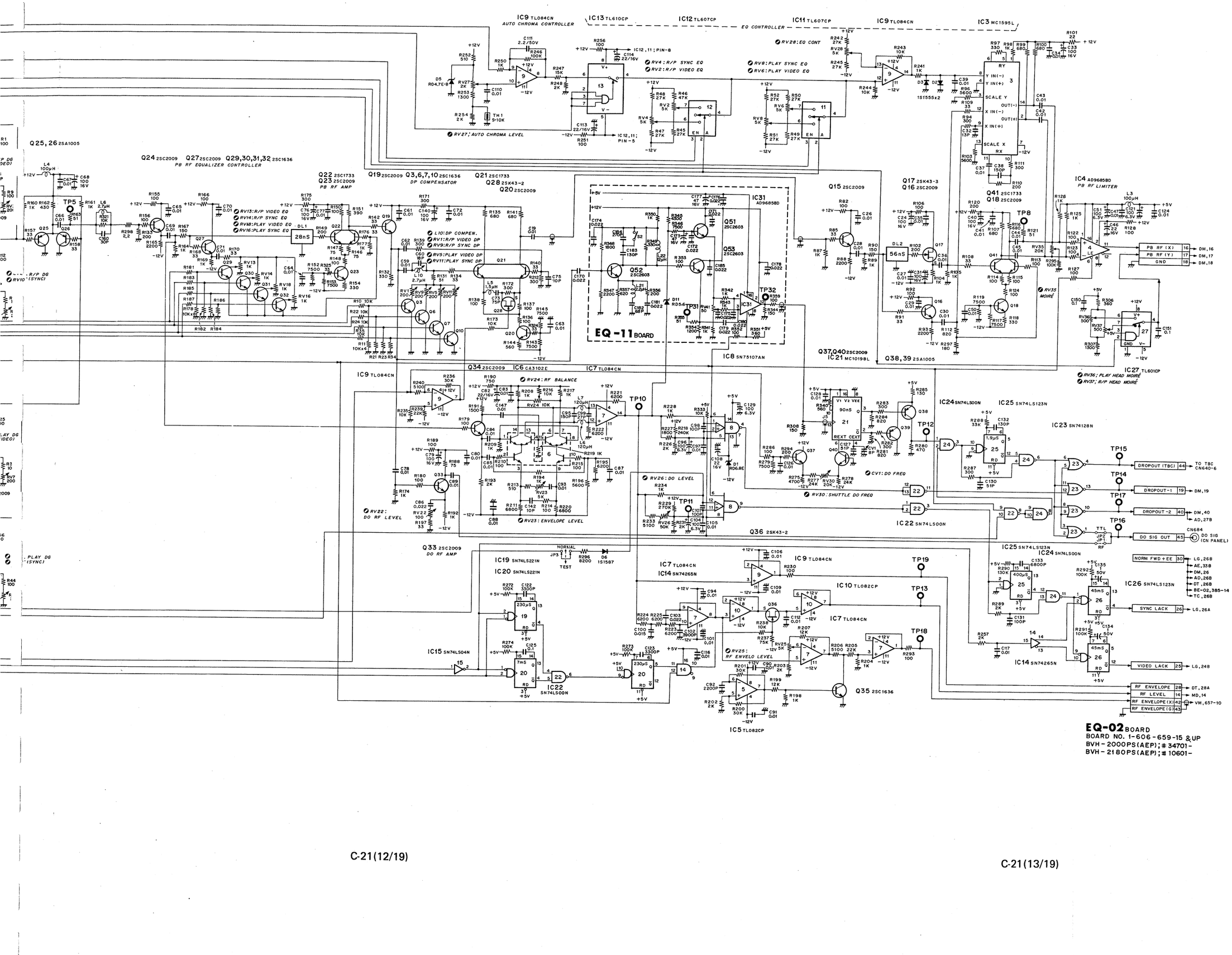

EQ-02 BOARD
BOARD NO. 1-606-659-15 & UP
BVH-2000PS(AEP); # 34701-
BVH-2180PS(AEP); # 10601-

EQ-02 BOARD

Video/Sync PB Equalizer

C-21(17/19)

C-21(18/19)

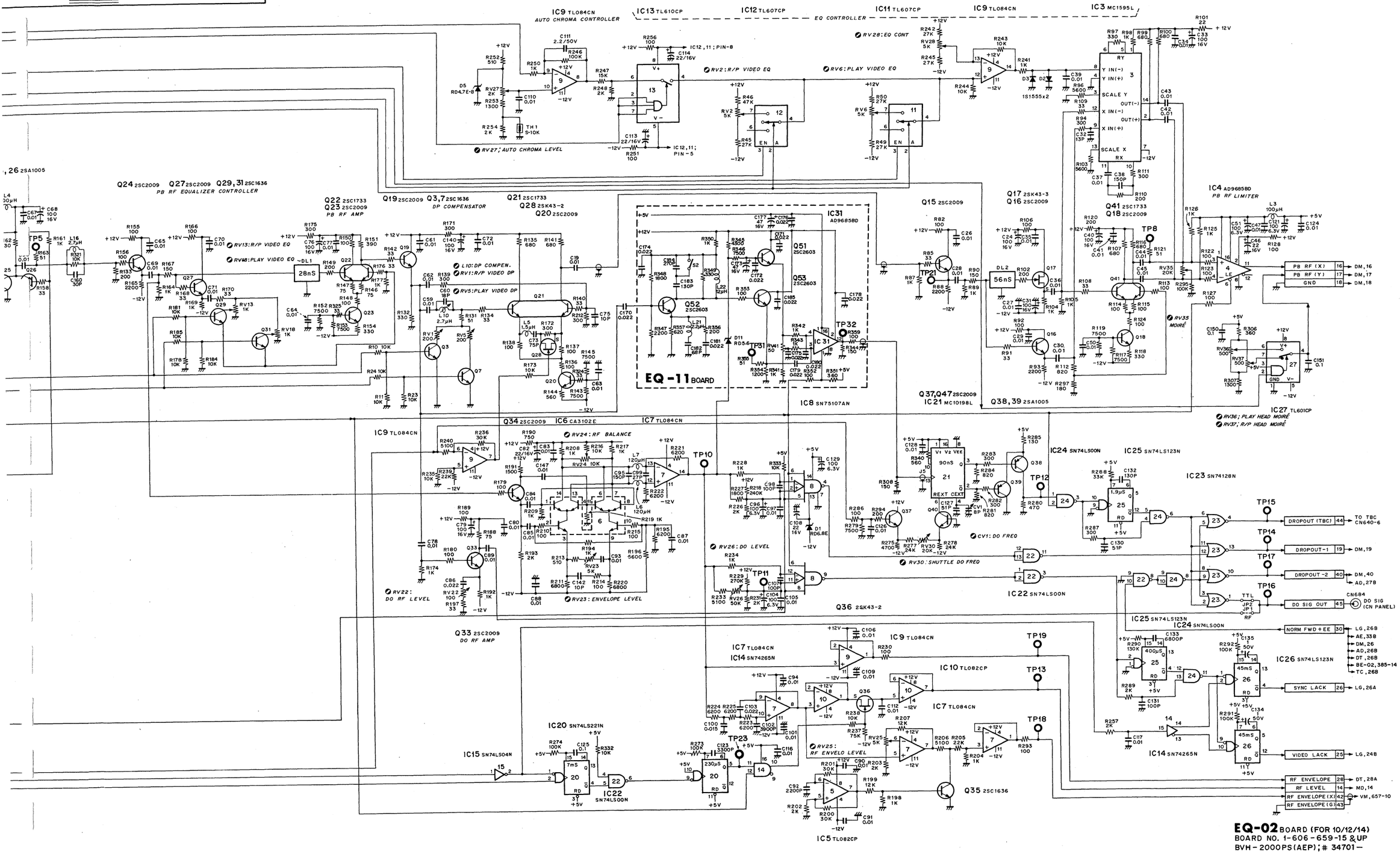

EQ-02 BOARD (FOR 10/12/14)
BOARD NO. 1-606-659-15 &UP
BVH-2000PS(AEP);# 34701-

DM-25 BOARD (1-606-661-14)
Component Side

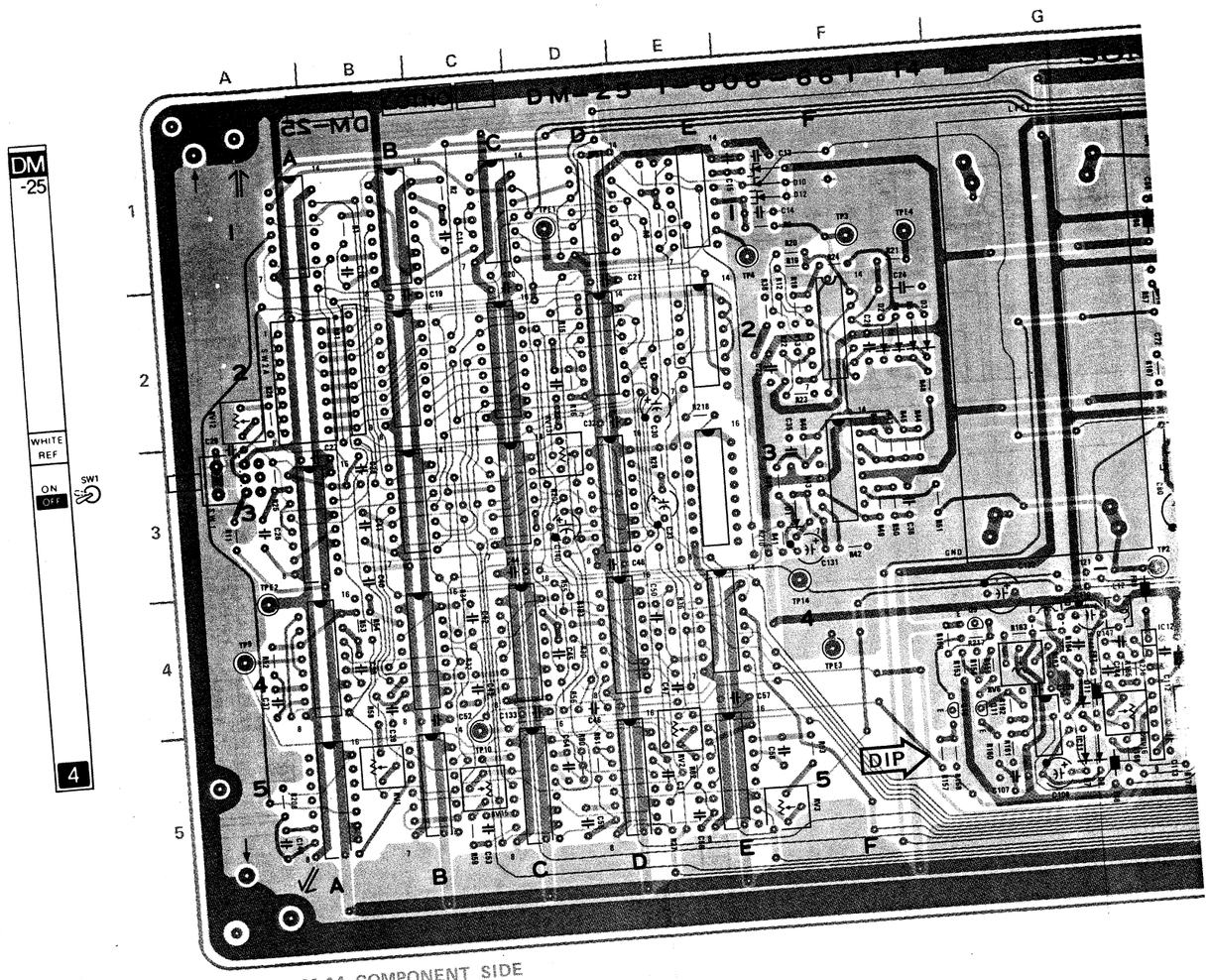

■ 1-606-661-14 COMPONENT SIDE

SW-86 BOARD (1-613-185-11)
Component Side

For NTSC, PM

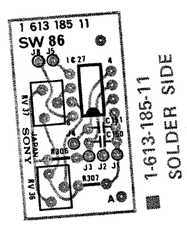

■ 1-613-185-11
SOLDER SIDE

RB1

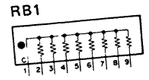

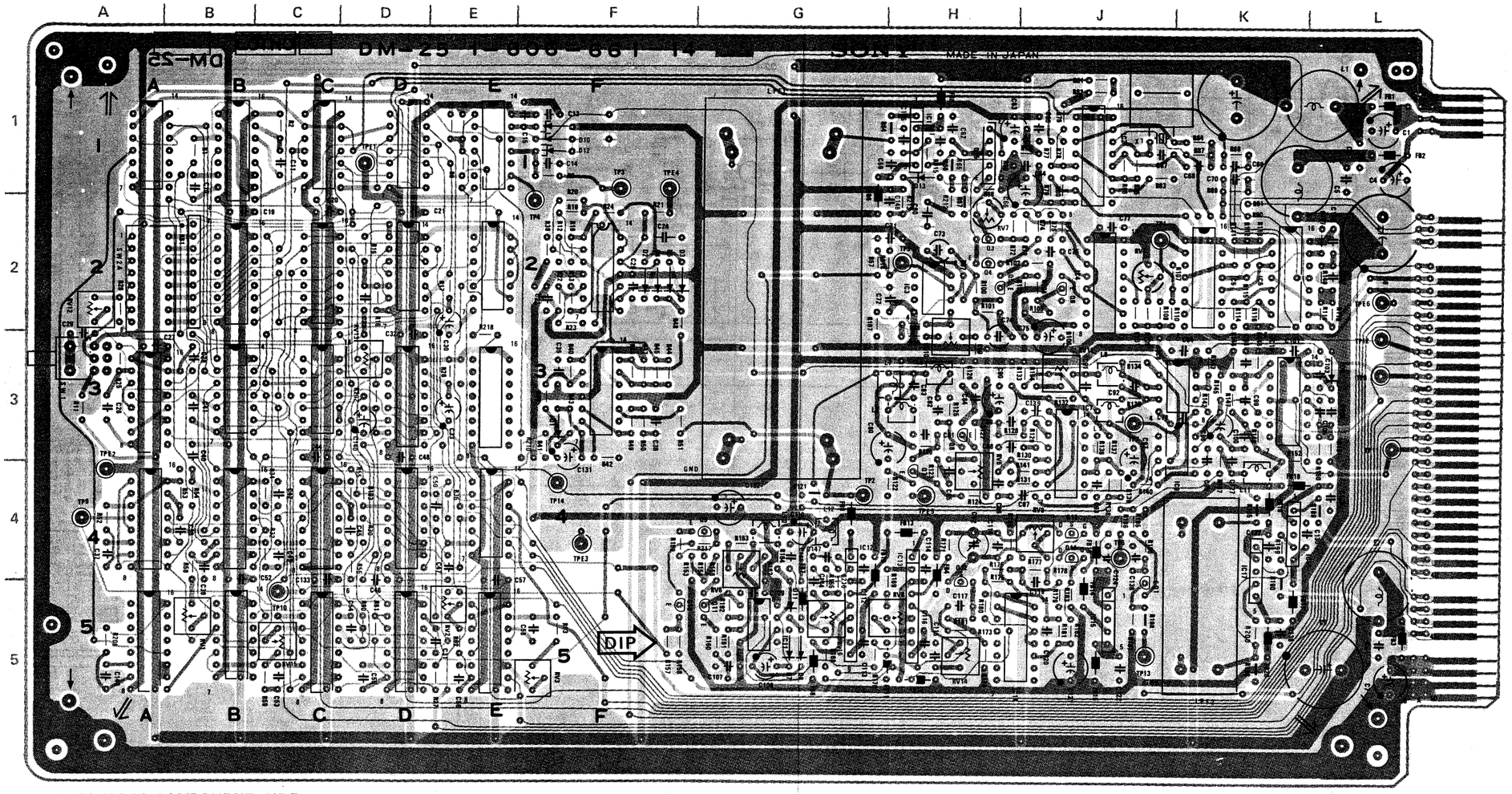

■ 1-606-661-14 COMPONENT SIDE

■ 1-606-661-14 SOLDER SIDE

DM-25 (1-606-661-14)

BVH-2000/PS/PM
BVH-2180/PS/PM
BVH-2500/P

CV2	4H		Q5	2H
			Q6	2J
D1	3F		Q7	4H
D2	2F		Q8	3H
D3	2F		Q9	4G
D4	2F		Q10	5F
D5	2F		Q11	5G
D6	3L		Q12	4H
D7	5G		Q13	4J
D8	5G		Q14	4J
D9	1F		Q15	1H
D10	1F			
D11	5G		RB1	2B
D12	1F			
D13	1H		RV1	5B
			RV2	5E
IC1	1H		RV3	5F
IC1A			RV4	2J
IC1B			RV5	4H
IC1C			RV6	4G
IC1D			RV7	2H
IC1E			RV8	5H
IC2	1J		RV9	4J
IC2B			RV10	3H
IC2C			RV11	3J
IC2D			RV12	2A
IC2E			RV13	3D
IC2F			RV14	5H
IC3	2H		RV15	5C
IC3A			RV16	5G
IC3B			RV17	2J
IC3C				
IC3D			(SW-86 BOARD)	
IC3F			RV36	1A
IC4	2J		RV37	1A
IC4A				
IC4B			SW1	3A
IC4C			SW2A	
IC4D				
IC4E			TP1	2J
IC5	2K		TP2	4G
IC5A			TP3	1F
IC5B			TP4	1F
IC5C			TP5	2H
IC5D			TP6	4J
IC5E			TP7	3J
IC6	2K		TP8	3L
IC7	3J		TP9	4A
IC8	3K		TP10	5C
IC9	3K		TP11	3L
IC10	3K		TP12	3L
IC11	5G		TP13	5J
IC12	5G		TP14	4F
IC13	5H			
IC14	5J		(SW-86 BOARD)	
IC15	5J		TPA	2A
IC16	4K			
IC17	4K		TPE1	1D
			TPE2	4A
(SW-86 BOARD)			TPE3	4F
IC27	1A		TPE4	1F
			TPE5	4H
Q1	4J		TPE6	2L
Q3	2H			
Q4	2H		X1	1J

C-24
C-23
C-22
BVH-2000/PS/PM
BVH-2180/PS/PM

DM-25

WHITE REF

ON OFF SW1

4

1 613 185 11
SW 86

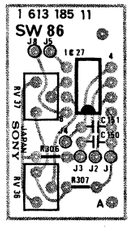

■ 1-613-185-11 SOLDER SIDE

RB1

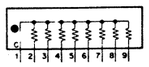

2000PS; #22301 – 33799
2180PS; #10001 – 10199
2500P; #10001 – 10599

2500(J); #10201 –
2500(U/C); #10201 –

1-606-661-14

CARD RACK **DM-25**

DM-25 CARD RACK

1-606-661-14

2000PS; #22301 – 33799
2180PS; #10001 – 10199
2500P; #10001 – 10599

2500(J); #10201 –
2500(U/C); #10201 –

DM-25 BOARD

Video Demodulator

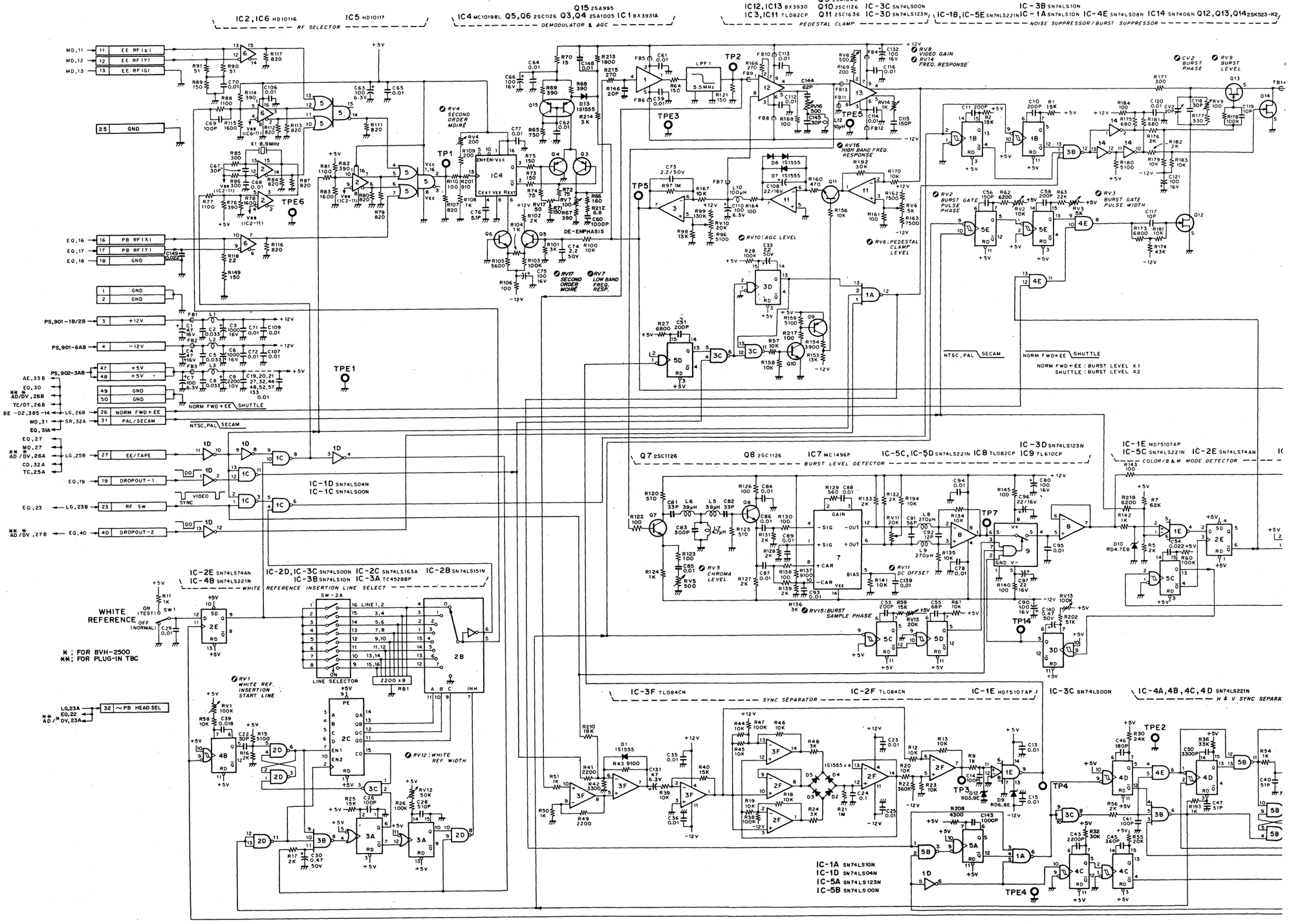

1-606-661-14

2000PS; #22301 – 33799
2180PS; #10001 – 10199
2500P; #10001 – 10599

2500(J); #10201 –
2500(U/C); #10201 –

2000PS; #22301 – 33799
2180PS; #10001 – 10199
2500P; #10001 – 10599

2500(J); #10201 –
2500(U/C); #10201 –

1-606-661-14

CARD RACK DM-25

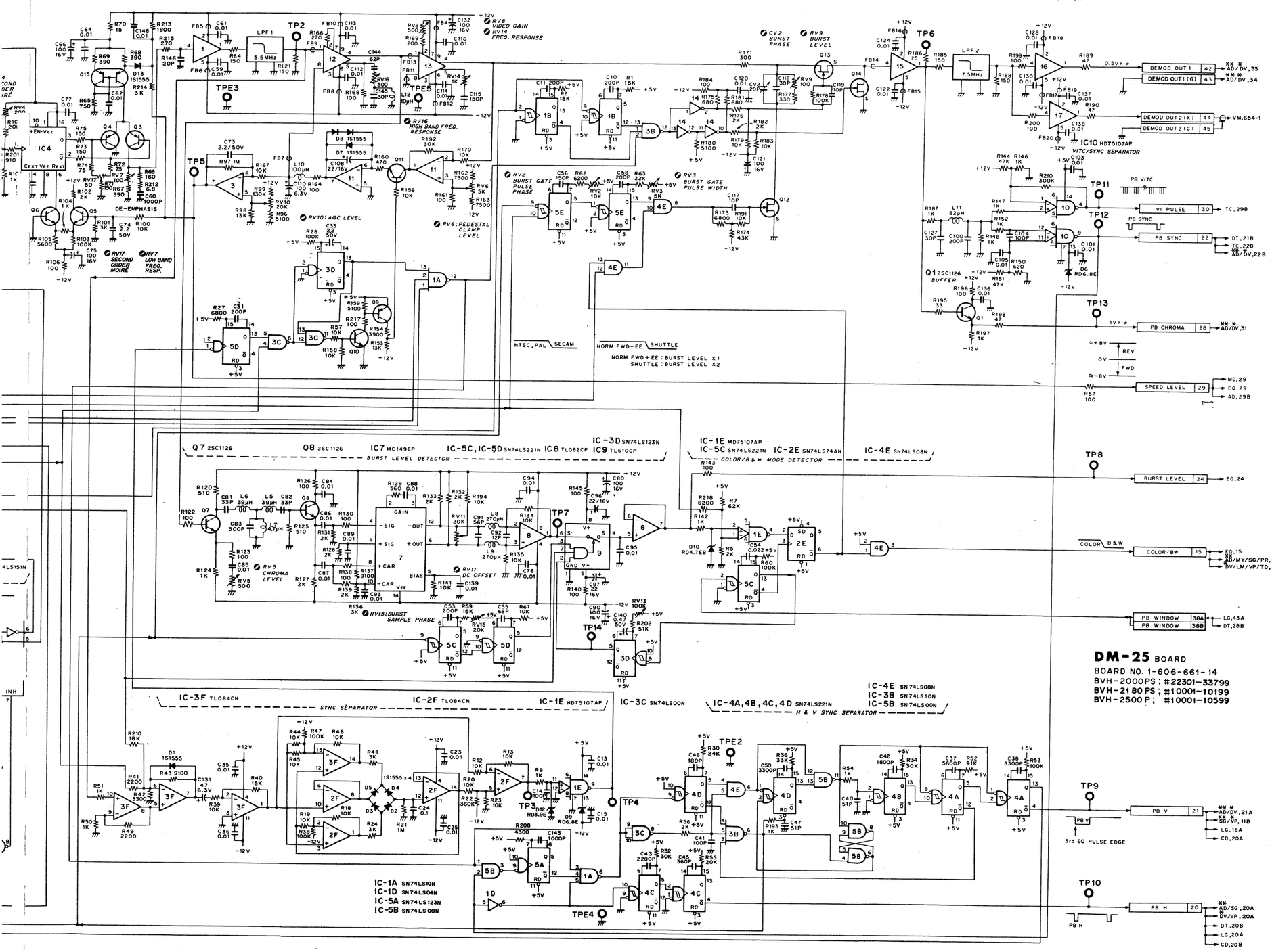

DM-25 BOARD
BOARD NO. 1-606-661-14
BVH-2000PS ; #22301–33799
BVH-2180PS ; #10001–10199
BVH-2500P ; #10001–10599

1-606-661-14 2000PS; #33801 – 34399
2180PS; #10201 – 10599
2500P; #10601 – 10699

2000PS; #33801 – 34399
2180PS; #10201 – 10599
2500P; #10601 – 10699 1-606-661-14

DM-51 BOARD (1-616-409-11)

Solder Side

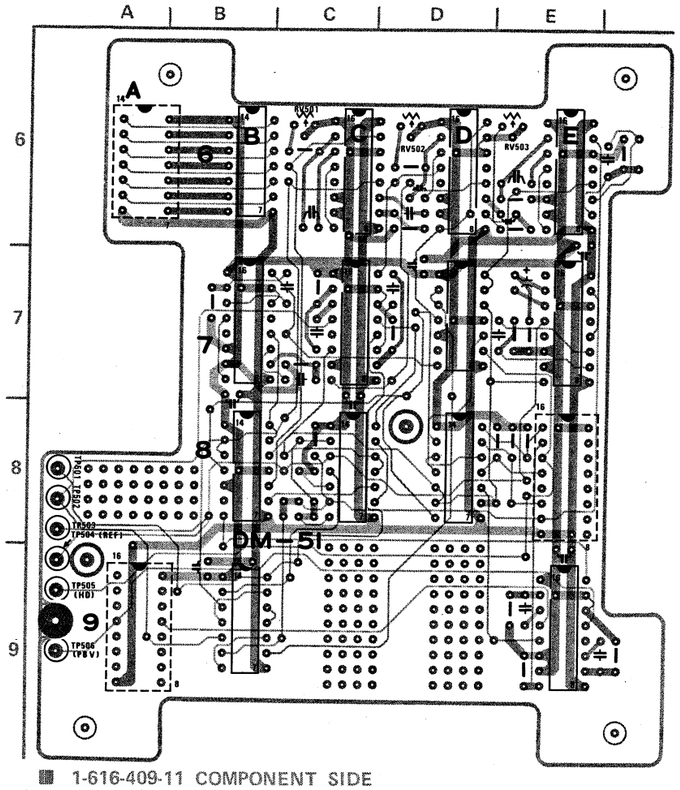

■ 1-616-409-11 COMPONENT SIDE

■ 1-616-409-11 SOLDER SIDE

DM-25 BOARD (1-606-661-14)

Component Side

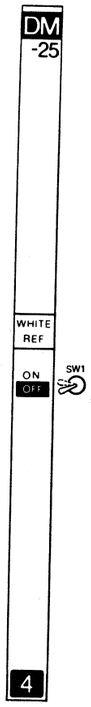

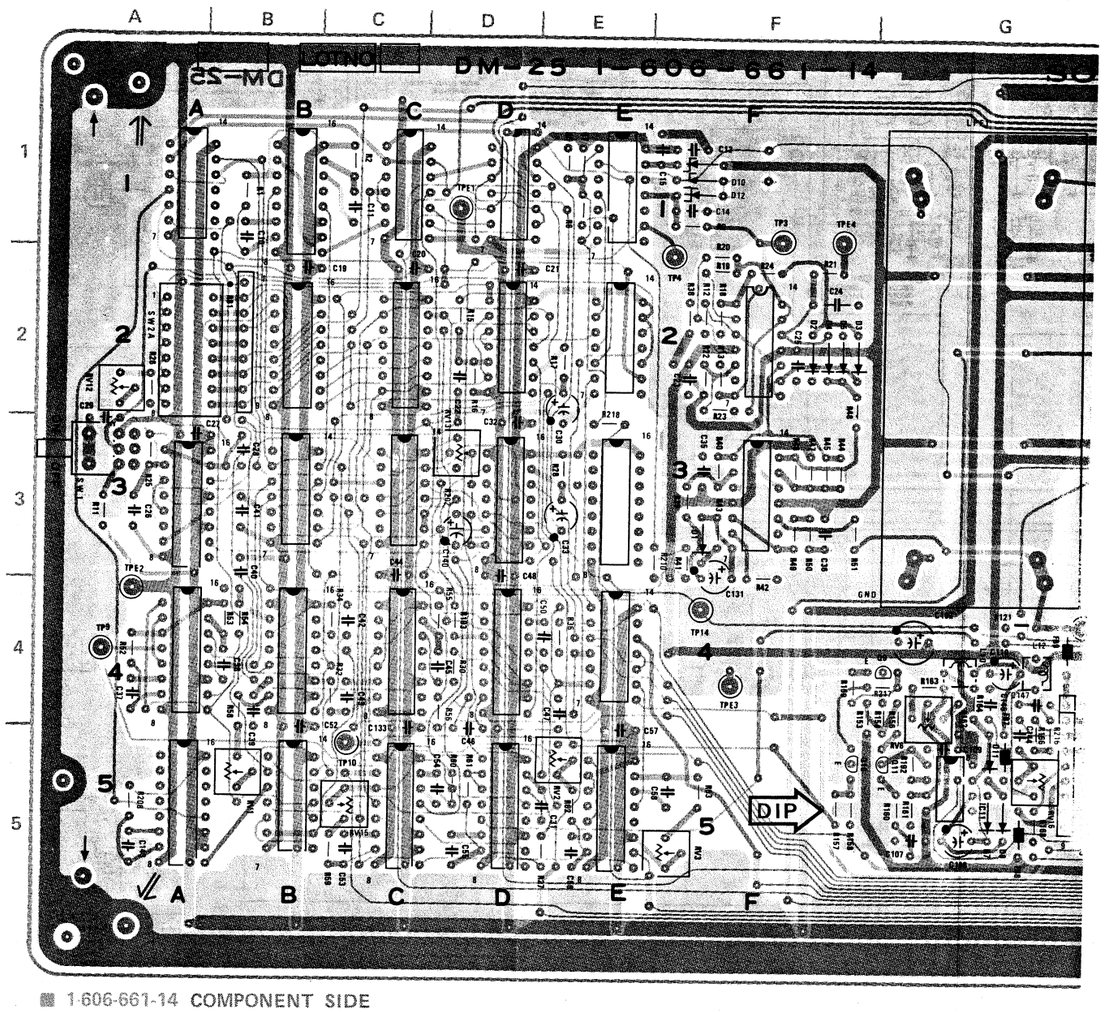

■ 1-606-661-14 COMPONENT SIDE

SW-86 BOARD (1-613-185-11)

Component Side

For NTSC, PM

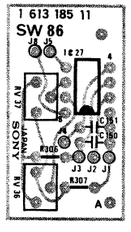

■ 1-613-185-11 SOLDER SIDE

RB1

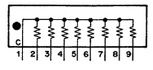

M-25 BOARD (1-606-661-14)

Component Side

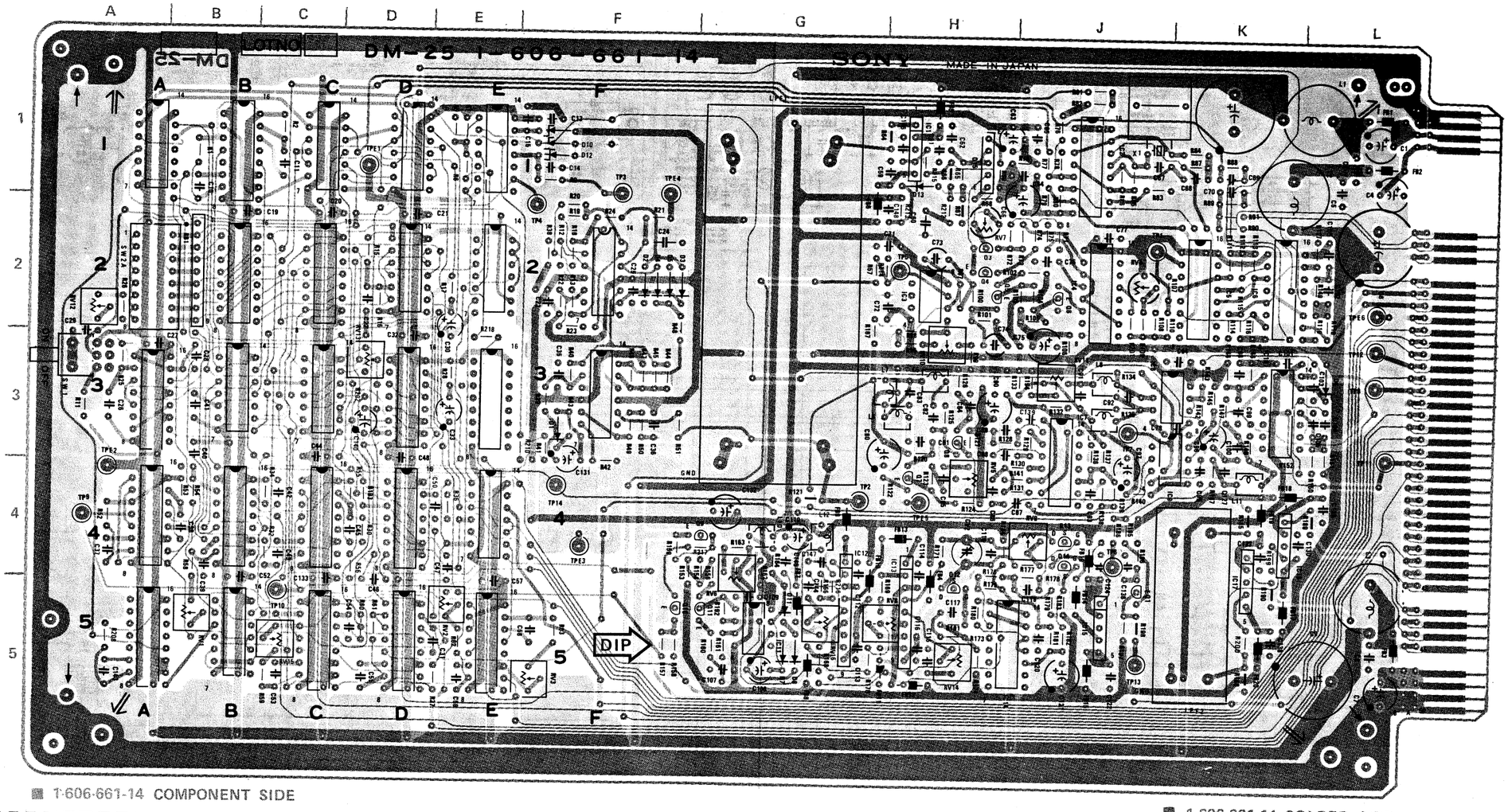

■ 1-606-661-14 COMPONENT SIDE

■ 1-606-661-14 SOLDER SIDE

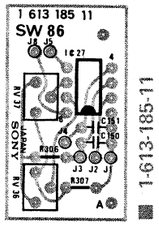

■ 1-613-185-11 SOLDER SIDE

RB1

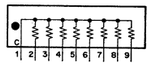

C-27(3/13)

C-27(4/13)

DM-25 (1-606-661-14)

BVH-2000PS
BVH-2180PS
BVH-2500P

CV2	4H	Q5	2H
		Q6	2J
D1	3F	Q7	4H
D2	2F	Q8	3H
D3	2F	Q9	4G
D4	2F	Q10	5F
D5	2F	Q11	5G
D6	3L	Q12	4H
D7	5G	Q13	4J
D8	5G	Q14	4J
D9	1F	Q15	1H
D10	1F		
D11	5G	RB1	2B
D12	1F		
D13	1H	RV1	5B
		RV2	5E
IC1	1H	RV3	5F
IC1A		RV4	2J
IC1B		RV5	4H
IC1C		RV6	4G
IC1D		RV7	2H
IC1E		RV8	5H
IC2	1J	RV9	4J
IC2B		RV10	3H
IC2C		RV11	3J
IC2D		RV12	2A
IC2E		RV13	3D
IC2F		RV14	5H
IC3	2H	RV15	5G
IC3A		RV16	5G
IC3B		RV17	2J
IC3C		RV501	6C
IC3D		RV502	6D
IC3F		RV503	6E
IC4	2J		
IC4A		(SW-86 BOARD)	
IC4B		RV36	1A
IC4C		RV37	1A
IC4D			
IC4E		SW1	3A
IC5	2K	SW2A	
IC5A			
IC5B		TP1	2J
IC5C		TP2	4G
IC5D		TP3	1F
IC5E		TP4	1F
IC6	2K	TP5	2H
IC6B		TP6	4J
IC6C		TP7	3J
IC6D		TP8	3L
IC6E		TP9	4A
IC7	3J	TP10	5C
IC7B		TP11	3L
IC7C		TP12	3L
IC7D		TP13	5J
IC7E		TP14	4F
IC8	3K		
IC8B		(SW-86 BOARD)	
IC8C		TPA	2A
IC8D			
IC9	3K	TP501	8A
IC9B		TP502	8A
IC9E		TP503	8A
IC10	3K	TP504	9A
IC11	5G	TP505	9A
IC12	5G	TP506	9A
IC13	5H		
IC14	5J	TPE1	1D
IC15	5J	TPE2	4A
IC16	4K	TPE3	4F
IC17	4K	TPE4	1F
		TPE5	4H
(SW-86 BOARD)		TPE6	2L
IC27	1A		
		X1	1J
J501	8B		
J502	8B		
J503	8B		
Q1	4J		
Q3	2H		
Q4	2H		

DM-25 BOARD

Video Demodulator

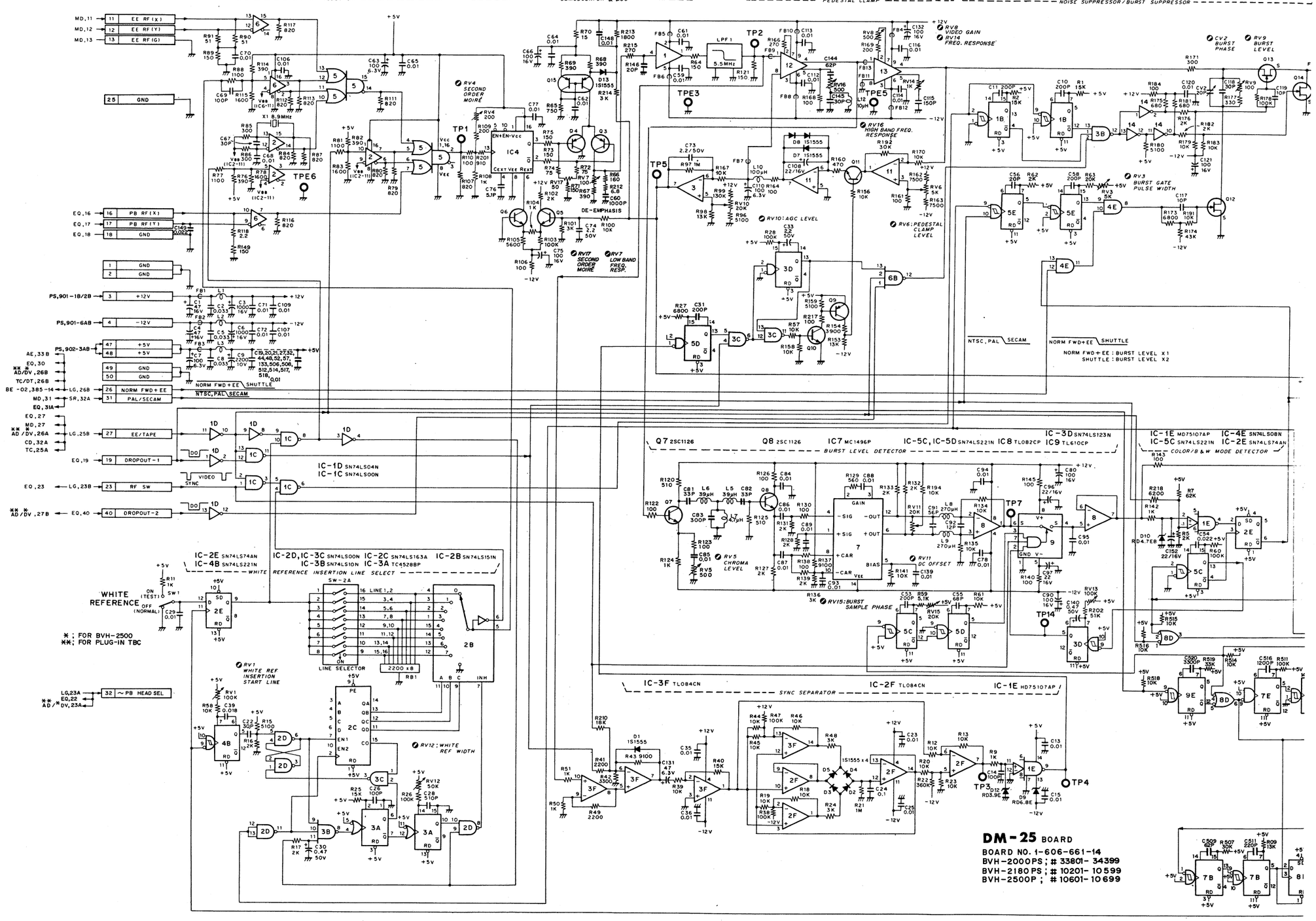

2000PS; #33801 – 34399
2180PS; #10201 – 10599
2500P; #10601 – 10699

1-606-661-14

CARD RACK DM-25

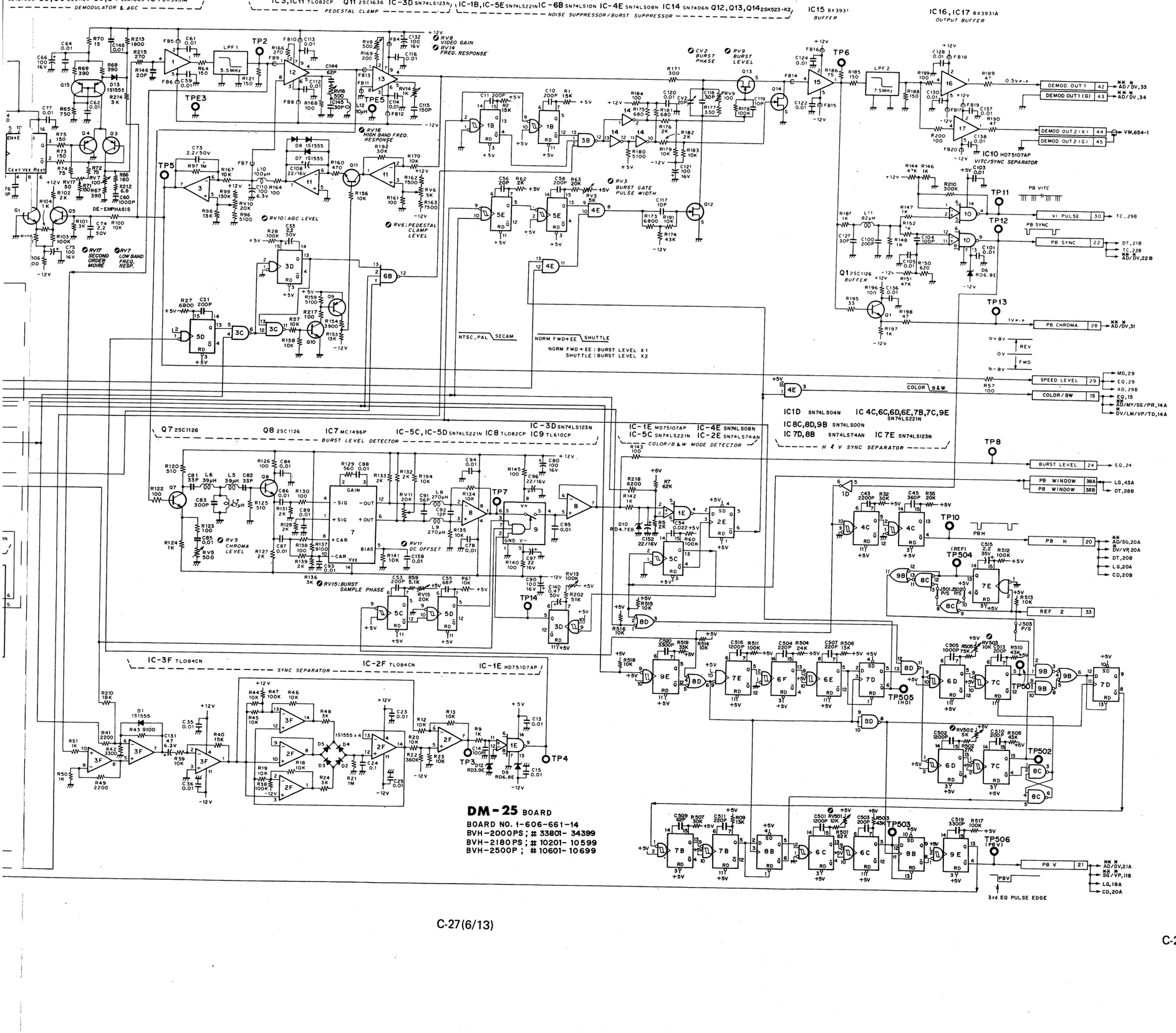

1-606-661-15 CARD RACK **DM-25**

DM-25 BOARD (1-606-661-15)

Component Side

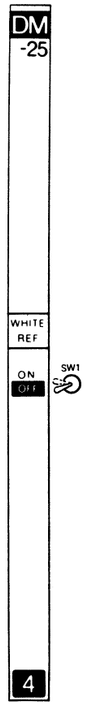

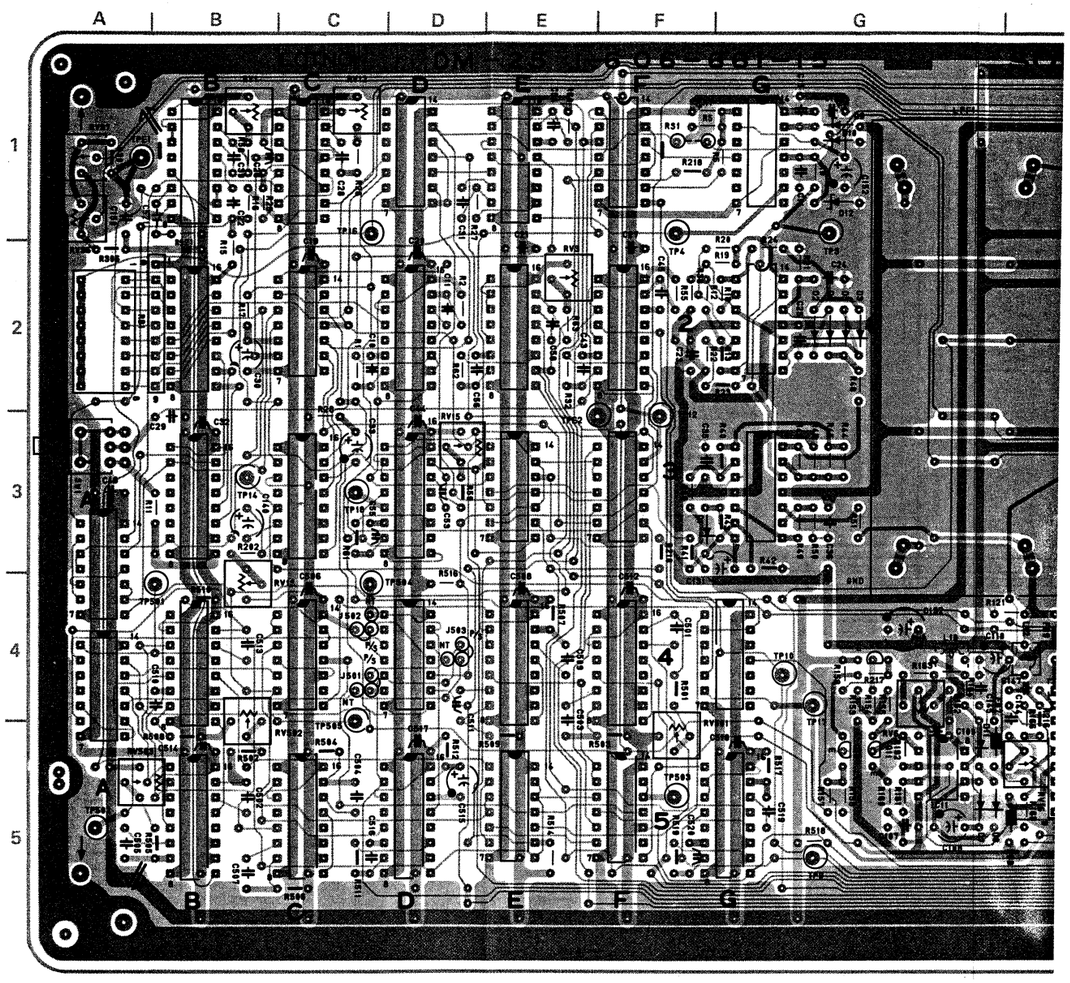

■ 1-606-661-15 COMPONENT SIDE

RB1

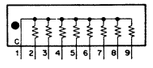

DM-25 (1-606-661-15 & UP)

BVH-2000/PS/PM
BVH-2180/PS/PM
BVH-2500/P

| | | |

C-27(13/13) C-27(7/7) C-27(12/13) C-27(6/7) C-27(11/13) C-27(5/7) BV 00PS BV 00/PM

DM-25 BOARD

Video Demodulator

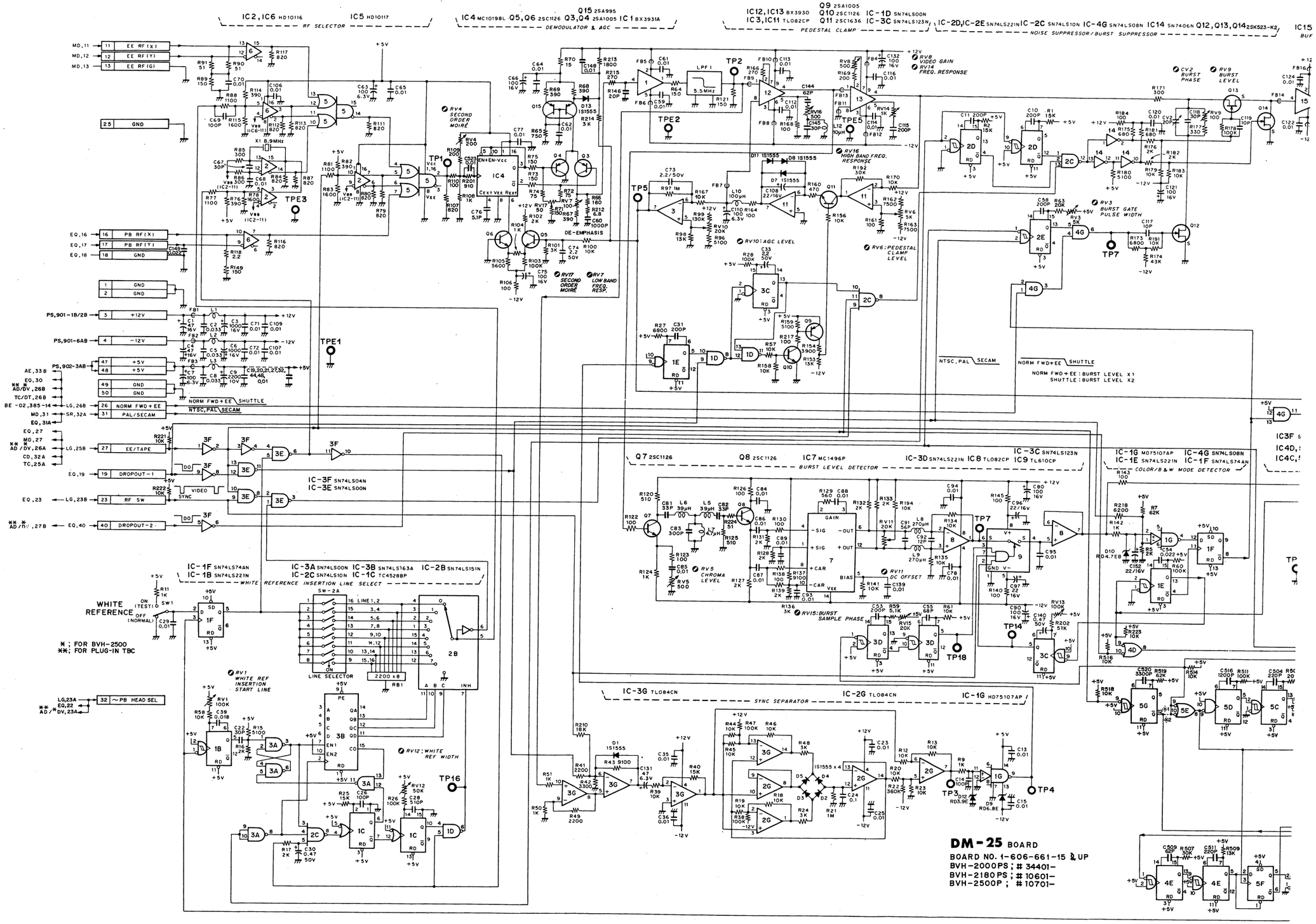

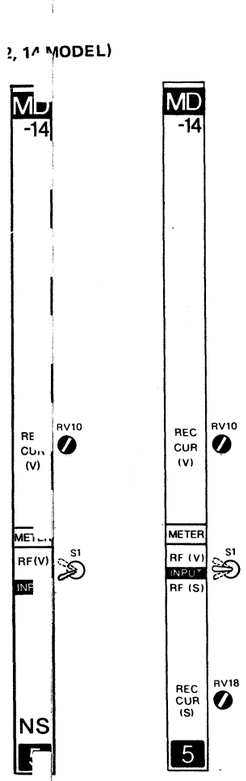

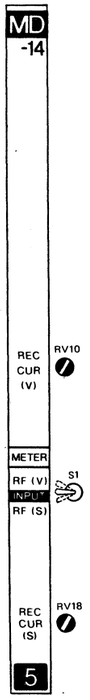

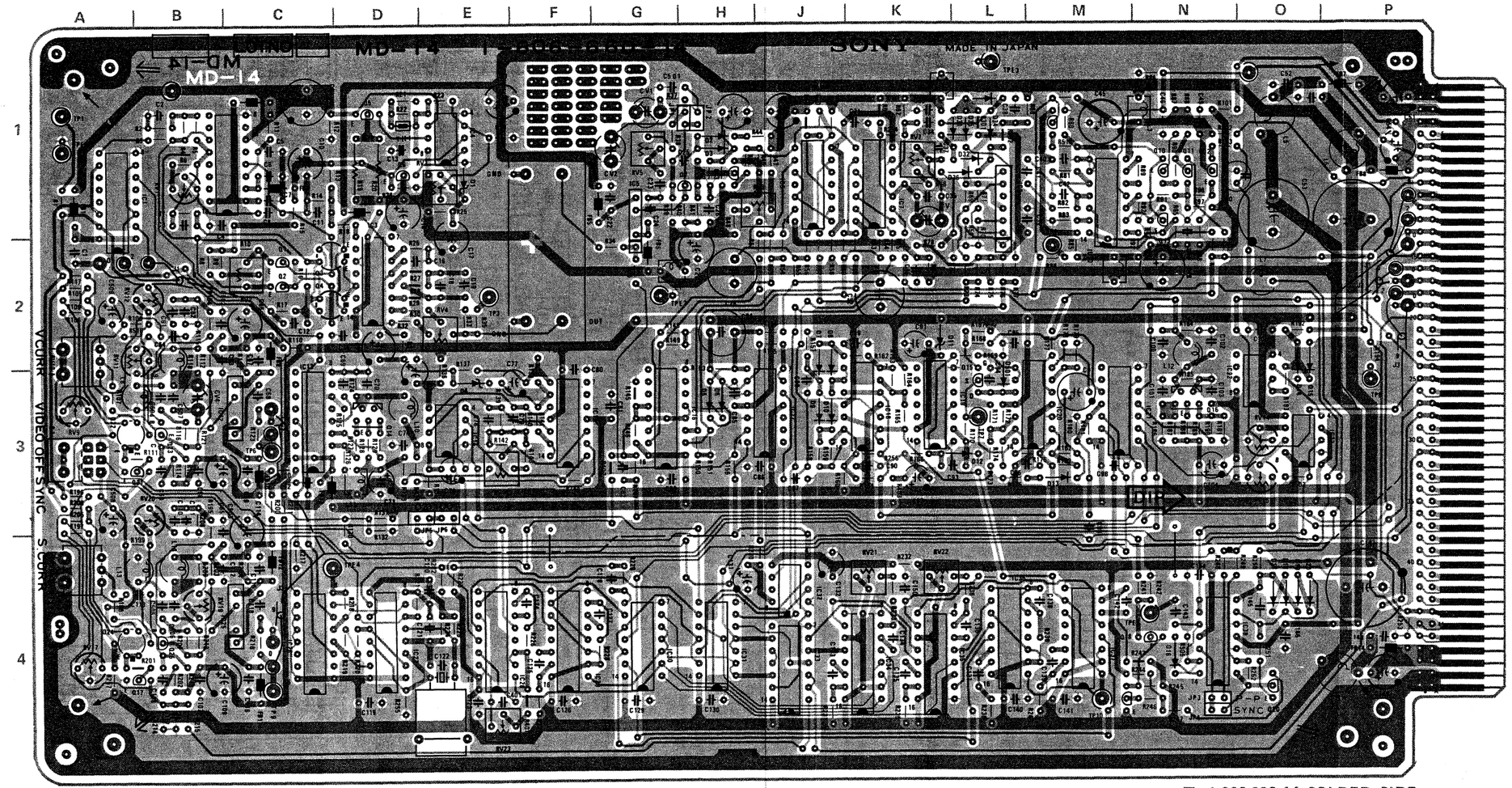

■ 1-606-660-14 COMPONENT SIDE

■ 1-606-660-14 SOLDER SIDE

MD-14 (1-606-660-14 & UP)

BVH-2000/PS/PM
BVH-2180/PS/PM

CV1	1G	Q1	2C
CV2	1G	Q2	2C
CV3	1K	Q3	2C
		Q4	2C
(PS)		Q5	1D
CV4	3B	Q6	1D
		Q7	1H
D1	1E	Q8	1H
D2	1H	Q9	1M
D3	1H	Q10	1N
D4	3E	Q11	1N
D5	3H	Q12	1N
D6	3H	Q13	1N
D7	3J	Q14	3D
D8	3J	Q15	3L
D9	3J	Q16	3N
D10	3J	Q17	4B
D11	2K	Q18	4N
D12	3L	Q19	4M
D13	3M	Q20	4P
D14	3P	Q21	3B
D15	3P	Q22	3A
D16	4N	Q23	3B
D17	4P	Q24	4A
D18	4P	Q25	4B
D19	4P		
D20	4P	RV1	1B
D31	1L	RV2	2C
D32	1L	RV3	1E
D33	1L	RV4	2E
D34	1L	RV5	1G
D35	1L	RV6	1J
D36	1L	RV7	1K
D501	3L	RV9	3A
		RV10	2A
IC1	1A	RV11	2B
IC2	1B	RV12	2B
IC3	2D	RV13	3E
IC4	1E	RV14	3P
IC5	1G	RV15	3P
IC6	1J	RV17	4A
IC7	1K	RV18	4A
IC9	1L	RV19	4B
IC10	1M	RV20	3B
IC12	3C	RV21	4K
IC13	3C	RV22	4K
IC14	3E	RV23	4E
IC15	3F		
IC16	3G	S1	3A
IC17	3J		
IC18	3K	TH1	1D
IC19	3K		
IC20	3M	TP1	1A
IC21	3M	TP2	1B
IC22	3P	TP3	2E
IC23	3P	TP4	2M
IC25	4C	TP5	1P
IC26	4C	TP6	3C
IC27	4D	TP7	3L
IC28	4E	TP8	3Q
IC29	4F	TP9	4C
IC30	4G	TP10	4M
IC31	4H		
IC32	4J	TPE1	1A
IC33	4J	TPE2	2G
IC34	4K	TPE3	1L
IC35	4K	TPE4	4C
IC36	4L	TPE5	4N
IC37	4M		
IC38	4N	X1	4E
JP1	1H		
JP2	1H		
JP3	4N		
JP4	4N		
JP5	3E		
JP6	3E		

MD-14 BOARD

Video Modulator

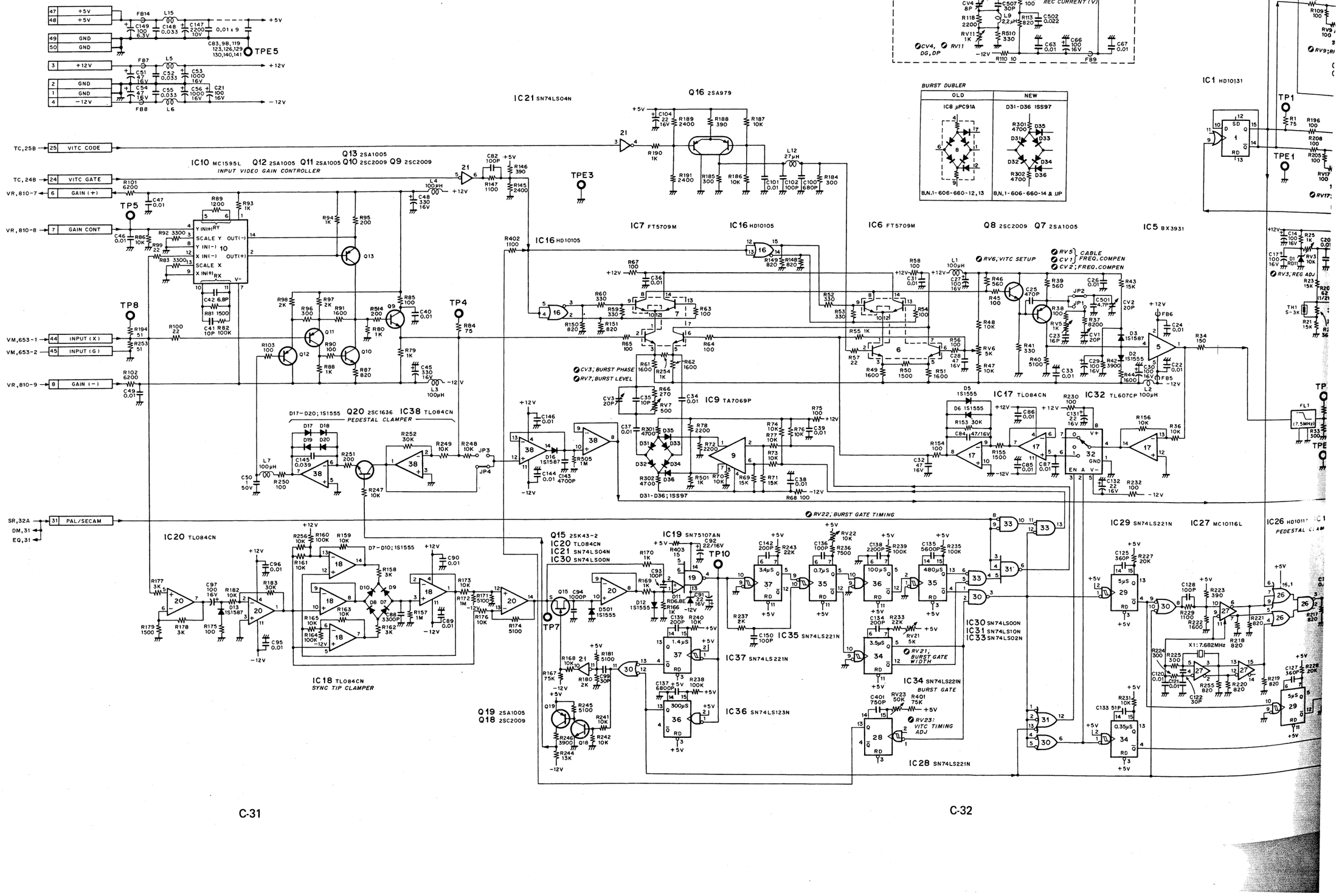

OLD UP TO #34999(BVH-2000PS)
UP TO #10699(BVH-2180PS)

Q23 2SC2009 IC12 BX3931

BURST DUBLER

OLD	NEW
IC8 μPC91A	D31-D36 1SS97
B,N,1-606-660-12,13	B,N,1-606-660-14 & UP

Q22 2SC1733
Q21 2SC1633
Q23 2SC2009 IC12 BX3931
Q24 2SC1733
Q17 2SC1633
Q25 2SC2009 IC25 BX3931
IC1 HD10131
Q6 2SD774
IC4 TL082CP Q5 2SD774
Q1 2SA1005 Q2 2SA1005 IC2 AM685DL
Q16 2SA979
IC7 FT5709M IC16 HD10105
IC6 FT5709M Q8 2SC2009 Q7 2SA1005 IC5 BX3931
IC9 TA7069P
IC17 TL084CN IC32 TL607CP
IC19 SN75107AN
IC35 SN74LS221N
IC37 SN74LS221N
IC36 SN74LS123N
IC34 SN74LS221N
IC28 SN74LS221N
IC29 SN74LS221N IC27 MC10116L
IC26 HD10117 IC13 MC10198L
IC30 SN74LS00N
IC31 SN74LS10N
IC33 SN74LS02N
IC28 SN74LS221N
IC31 SN74LS10N
IC15 TL084CN IC14 TL607CP
IC3 MC1496P
IC23 TL607CP
IC22 TL082CP
IC21 SN74LS04N
Q14 2SA979

MD-14 BOARD
BOARD NO. 1-606-660-12,13 & UP
BVH-2000PS ; #10301 -
BVH-2180PS ; #10001 -

MD-14 BOARD

Video Modulator

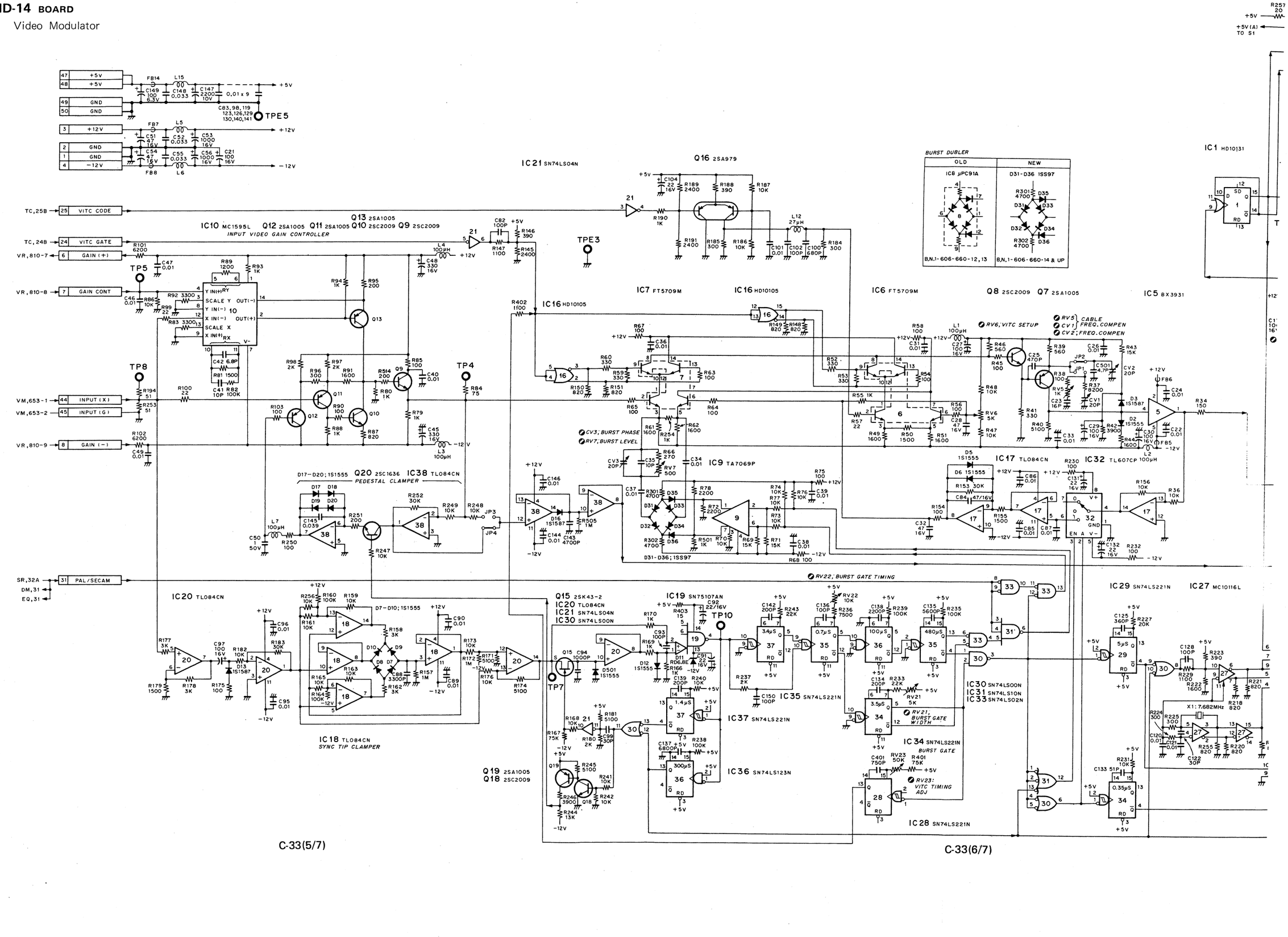

Q22 2SC1733
Q21 2SC1633
Q23 2SC2009
IC12 BX3931
Q16 2SA979
IC1 HD10131
IC7 FT5709M
IC16 HD10105
IC6 FT5709M
Q8 2SC2009 Q7 2SA1005
IC5 BX3931
Q6 2SD774
IC4 TL082CP Q5 2SD774
Q1 2SA1005 Q2 2SA1005
IC2 AM685DL
IC9 TA7069P
IC17 TL084CN
IC32 TL607CP
IC3 MC1496P
Q25 2SC2009
Q3 2SC1733 Q4 2SC1733
IC23 TL607CP
IC22 TL082CP
IC19 SN75107AN
IC35 SN74LS221N
IC37 SN74LS221N
IC36 SN74LS123N
IC34 SN74LS22IN
IC28 SN74LS221N
IC30 SN74LS00N
IC31 SN74LS10N
IC33 SN74LS02N
IC29 SN74LS221N
IC27 MC10116L
IC26 HD10117
IC13 MC10198L
Q14 2SA979
IC15 TL084CN
IC14 TL607CP
IC28 SN74LS221N
IC31 SN74LS10N
IC21 SN74LS04N

BURST DUBLER

OLD	NEW
IC8 μPC91A	D31-D36 1SS97
B.N.1-606-660-12,13	B.N.1-606-660-14 & UP

MD-14 BOARD (FOR 10/12/14)
BOARD NO. 1-606-660-12,13 & UP
BVH-2000PS ; #34301-

C-33(6/7)

C-33(7/7)

LG-02(A) BOARD (1-606-682-14)

Component Side

BVH-2000PS (For 10, 12, 14 MODEL)

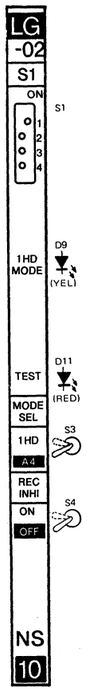

BVH-2000 (For 10, 12 MODEL)

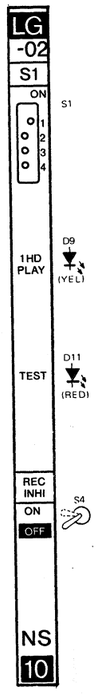

BVH-2000PS BVH-2180PS

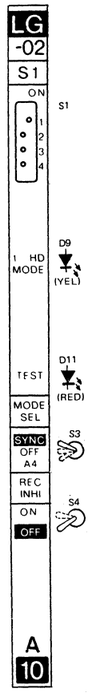

BVH-2000/PM BVH-2180/PM

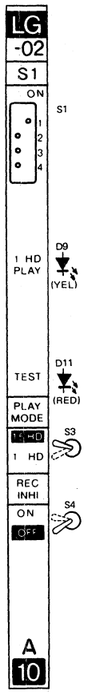

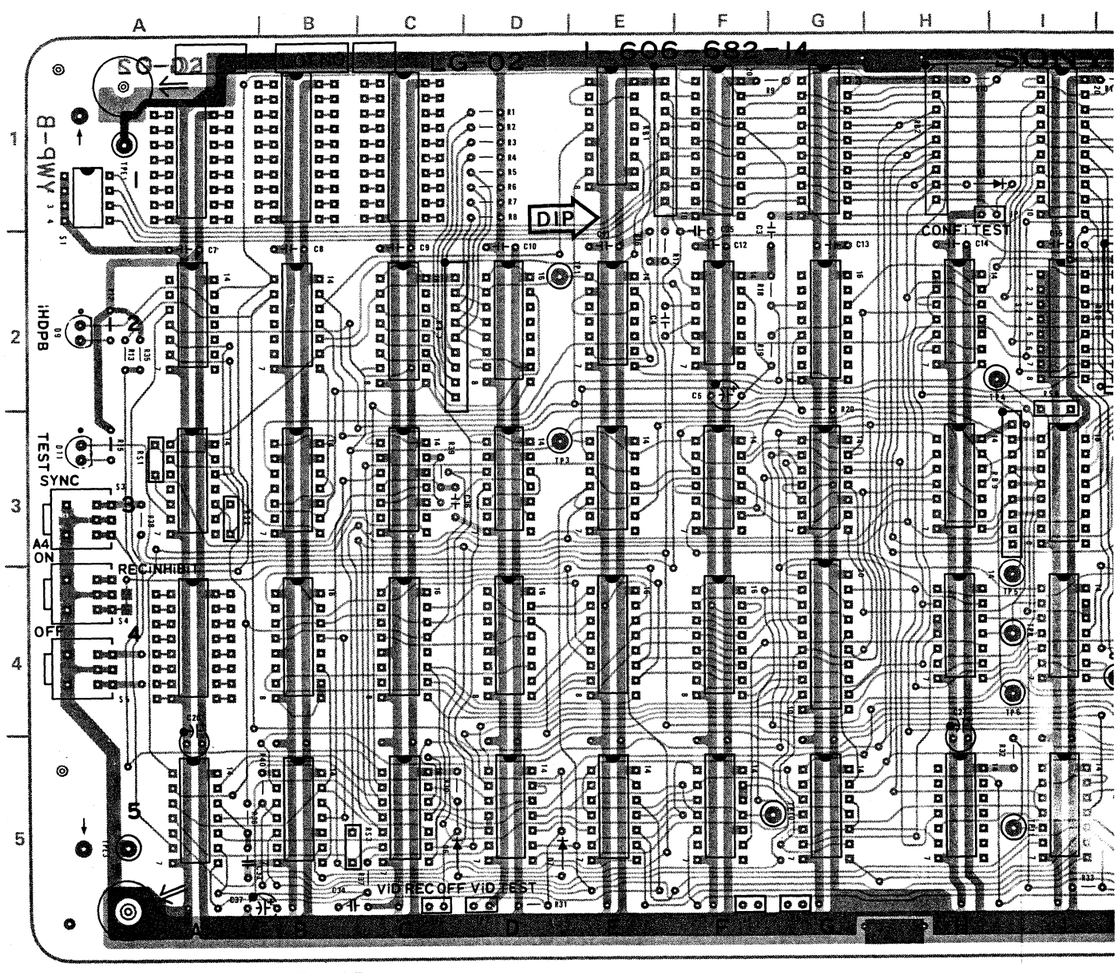

■ 1-606-682-14 COMPONENT SIDE

RB1, 2, 3, 4, 5, 6, 7, 8, 9

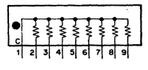

BV -2000/PM
BV -2180/PM

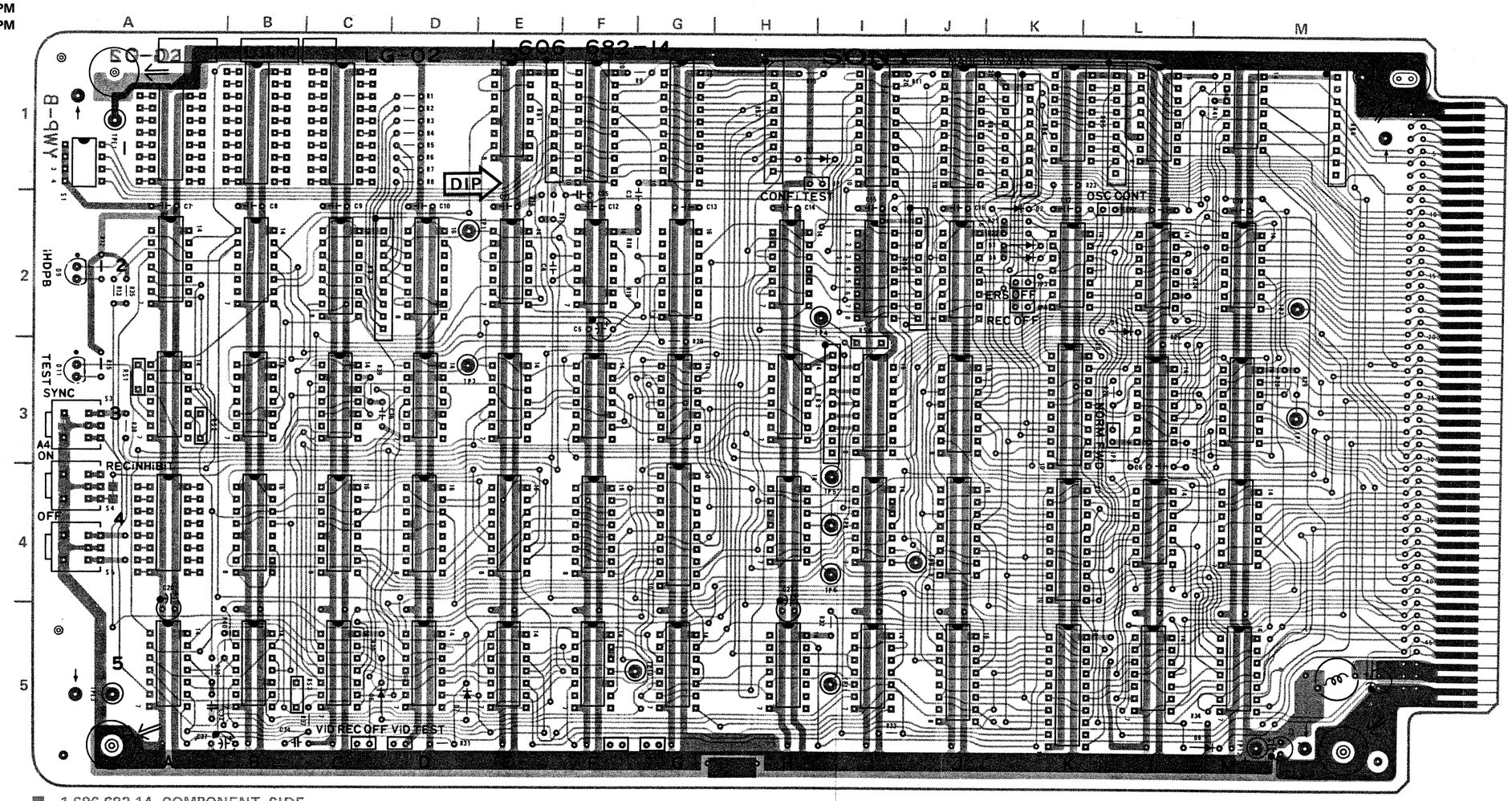

■ 1-606-682-14 COMPONENT SIDE

■ 1-606-682-14 SOLDER SIDE

RB1, 2, 3, 4, 5, 6, 7, 8, 9

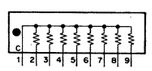

LG-02(A) (1-606-682-13 & UP)

BVH-2000/PS/PM
BVH-2180/PS/PM

D1	1H	JP1	1H
D2	2K	JP2	2L
D3	2K	JP3	2K
D4	2K	JP4	2K
D5	2L	JP5	3L
D6	5C	JP6	5C
D7	5D	JP7	5D
D8	5M	JP8	5F
D9	2A	JP9	5G
D11	3A		
		RB1	1E
IC1A		RB2	1H
IC1C		RB3	1K
IC1E		RB4	1K
IC1F		RB5	1L
IC1G		RB6	1M
IC1I		RB7	2C
IC1J		RB8	2J
IC1K		RB9	3I
IC1L			
IC2A		S1	1A
IC2B		S2	2I
IC2C		S3	3A
IC2D		S4	4A
IC2E			
IC2F		TP1	2D
IC2G		TP2	2M
IC2H		TP3	3D
IC2J		TP4	2I
IC2K		TP5	4I
IC2L		TP6	4I
IC2M		TP7	3M
IC3A		TP8	4I
IC3B		TP9	4J
IC3C		TP10	5F
IC3D		TP11	5I
IC3E		TP12	5M
IC3F			
IC3G		TPE1	1A
IC3H		TPE2	1M
IC3I		TPE3	5A
IC3J			
IC3K			
IC3L			
IC3M			
IC4B			
IC4C			
IC4D			
IC4E			
IC4F			
IC4G			
IC4H			
IC4I			
IC4J			
IC4K			
IC4L			
IC4M			
IC5A			
IC5B			
IC5C			
IC5D			
IC5E			
IC5F			
IC5G			
IC5H			
IC5I			
IC5J			
IC5K			
IC5L			
IC5M			

LG-02(A) BOARD
LOGIC

※ In case of BVH-2000 (U/C)10/12 MODEL, there isnot S3

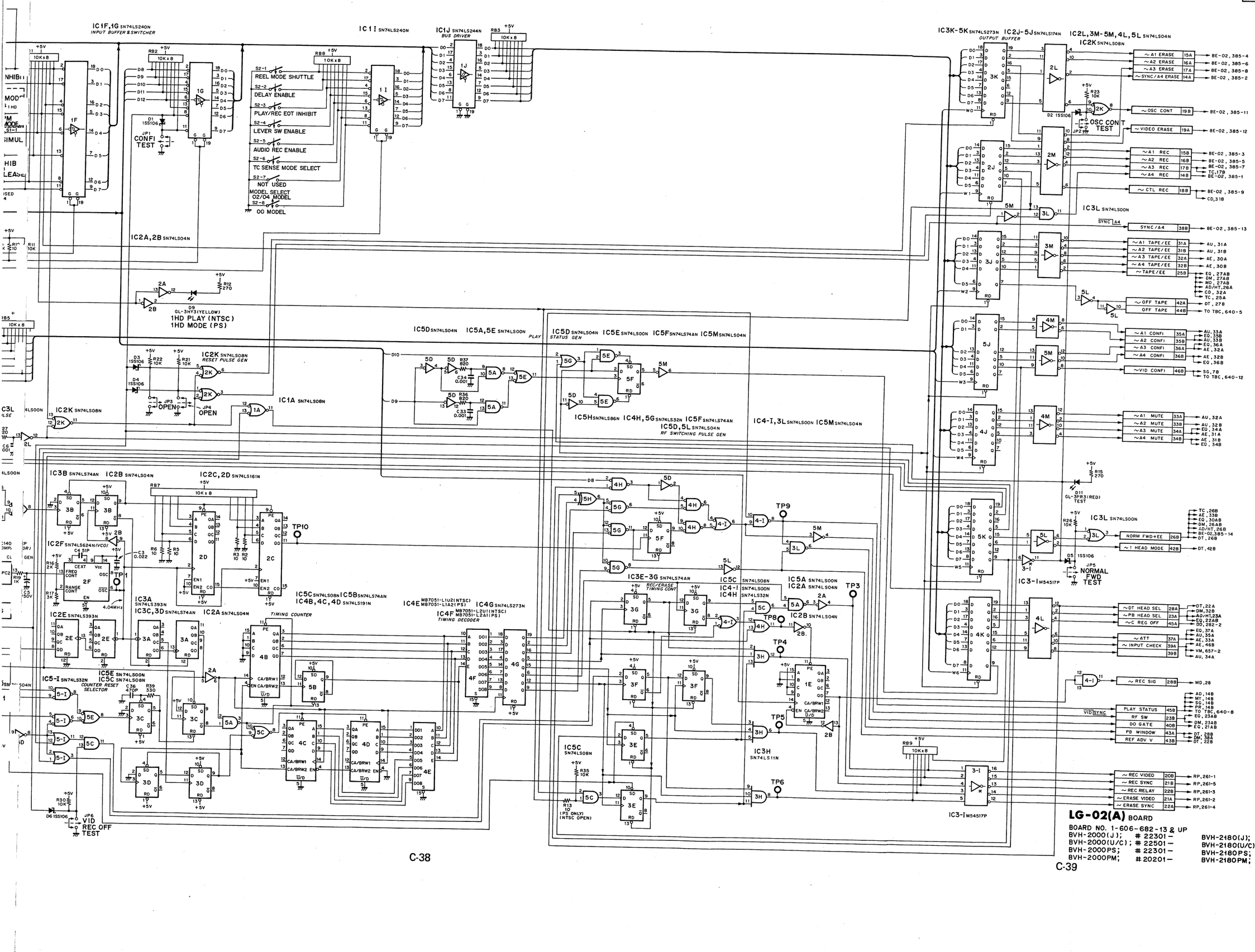

LG-02(A) BOARD

BOARD NO. 1-606-682-13 & UP

BVH-2000(J);	# 22301 –	BVH-2180(J);	#10001 –
BVH-2000(U/C);	# 22501 –	BVH-2180(U/C);	#10001 –
BVH-2000PS;	# 22301 –	BVH-2180PS;	#10001 –
BVH-2000PM;	# 20201 –	BVH-2180PM;	#10001 –

SY-79 BOARD (1-606-683-14)

Component Side

BVH-2500/P

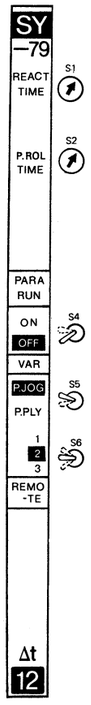

BVH-2000/PS (for 00/10 models)

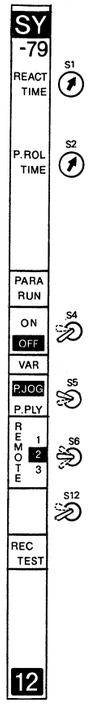

BVH-2000/PS/PM (for 02/12/04/14 models)

BVH-2180/PS/PM

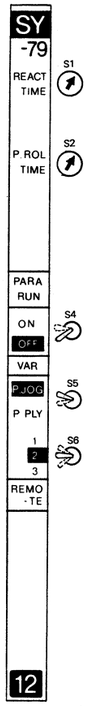

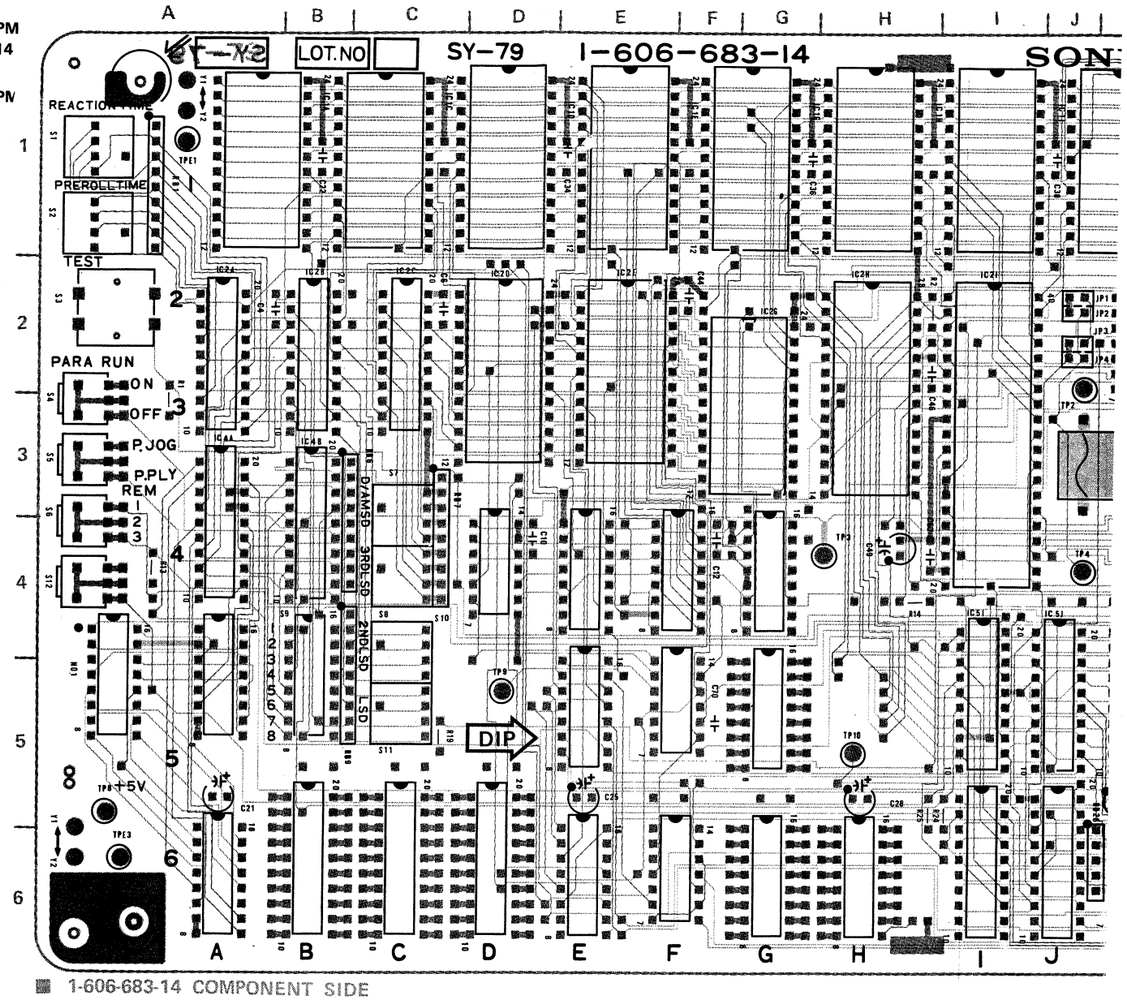

1-606-683-14 COMPONENT SIDE

S1, 2

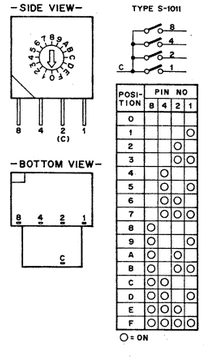

S7, 8, 10, 11

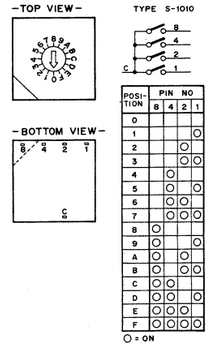

CP1, 2, 3

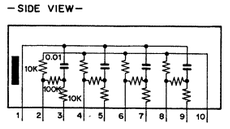

RB1, 2, 3, 5, 6, 7, 8, 9, 28, 29

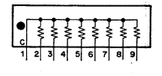

RB26, 27

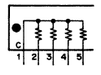

BVH-2000/PS/PM
(for 02/12/04/14 models)
BVH-2180/PS/PM

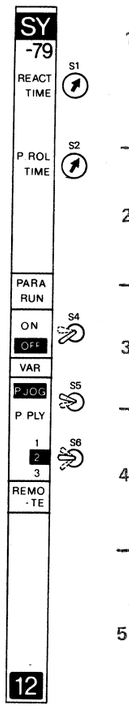

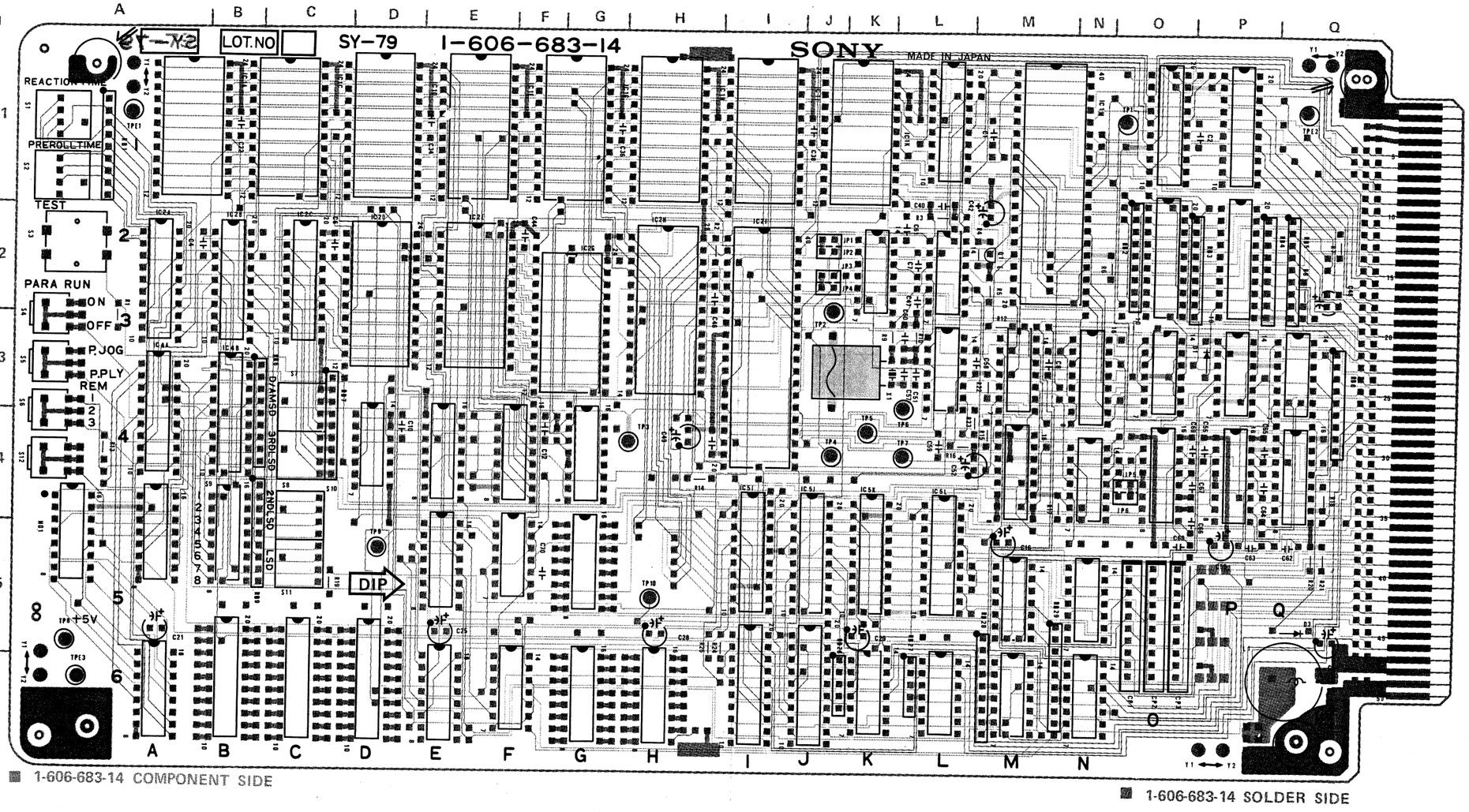

■ 1-606-683-14 COMPONENT SIDE

■ 1-606-683-14 SOLDER SIDE

SY-79 (1-606-683-14 & UP)

BVH-2000/PS/PM
BVH-2180/PS/PM
BVH-2500/P

CP1	5Q	IC6A	
CP2	5Q	IC6E	
CP3	5P	IC6F	
		IC6I	
D1	3P	IC6J	
D3	5Q	IC6K	
		IC6L	
(BVH-2500/P)		IC6M	
IC1A		IC6N	
IC1C		JP1	2J
IC1D		JP2	2J
IC1E		JP3	2J
IC1G		JP4	2J
IC1H		JP5	4Q
IC1I		JP6	4Q
IC1K			
IC1L		ND1	5A
IC1M			
IC1O		Q1	2M
IC1P			
IC2A		RB1	1A
IC2B		RB2	2Q
IC2C		RB3	2P
IC2D		RB5	2Q
IC2E		RB6	4C
IC2H		RB7	4C
IC2I		RB8	3Q
IC2K		RB9	5C
IC2L		RB26	6K
IC2O		RB27	6L
IC2P		RB28	6M
IC3L		RB29	6M
IC3M			
IC3N		S1	1A
IC3O		S2	1A
IC3P		S3	2A
IC3Q		S4	3A
IC4A		S5	3A
IC4B		S6	4A
IC4D		S7	4C
IC4E		S8	4C
IC4F		S9	5B
		S10	5C
(BVH-2500/P)		S11	5C
IC4G			(00 MODEL)
IC4M		S12	4A
IC4N			
IC4O		TP1	1Q
IC4P		TP2	2J
IC4Q		TP3	4H
IC5A		TP4	4J
IC5E		TP5	4K
IC5F		TP6	4L
IC5I		TP7	4L
IC5J		TP8	5A
IC5K		TP9	5D
IC5L		TP10	5H
IC5M			
IC5N		TPE1	1A
		TPE2	1Q
		TPE3	6A
		X1	3L

S1, 2

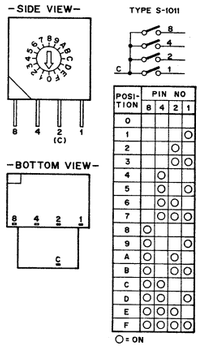

S7, 8, 10, 11

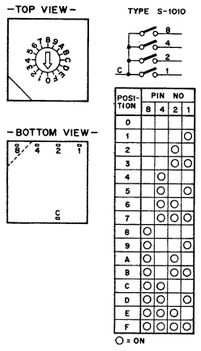

CP1, 2, 3

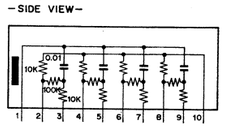

RB1, 2, 3, 5, 6, 7, 8, 9, 28, 29

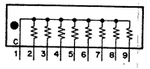

RB26, 27

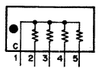

C-41

C-42

BVH-2000/PS/PM C-40 C-41 C-42
BVH-2180/PS/PM

BVH-2500/P C-70 C-71 C-72

SY-79 BOARD (1/2)

System Control CPU-1

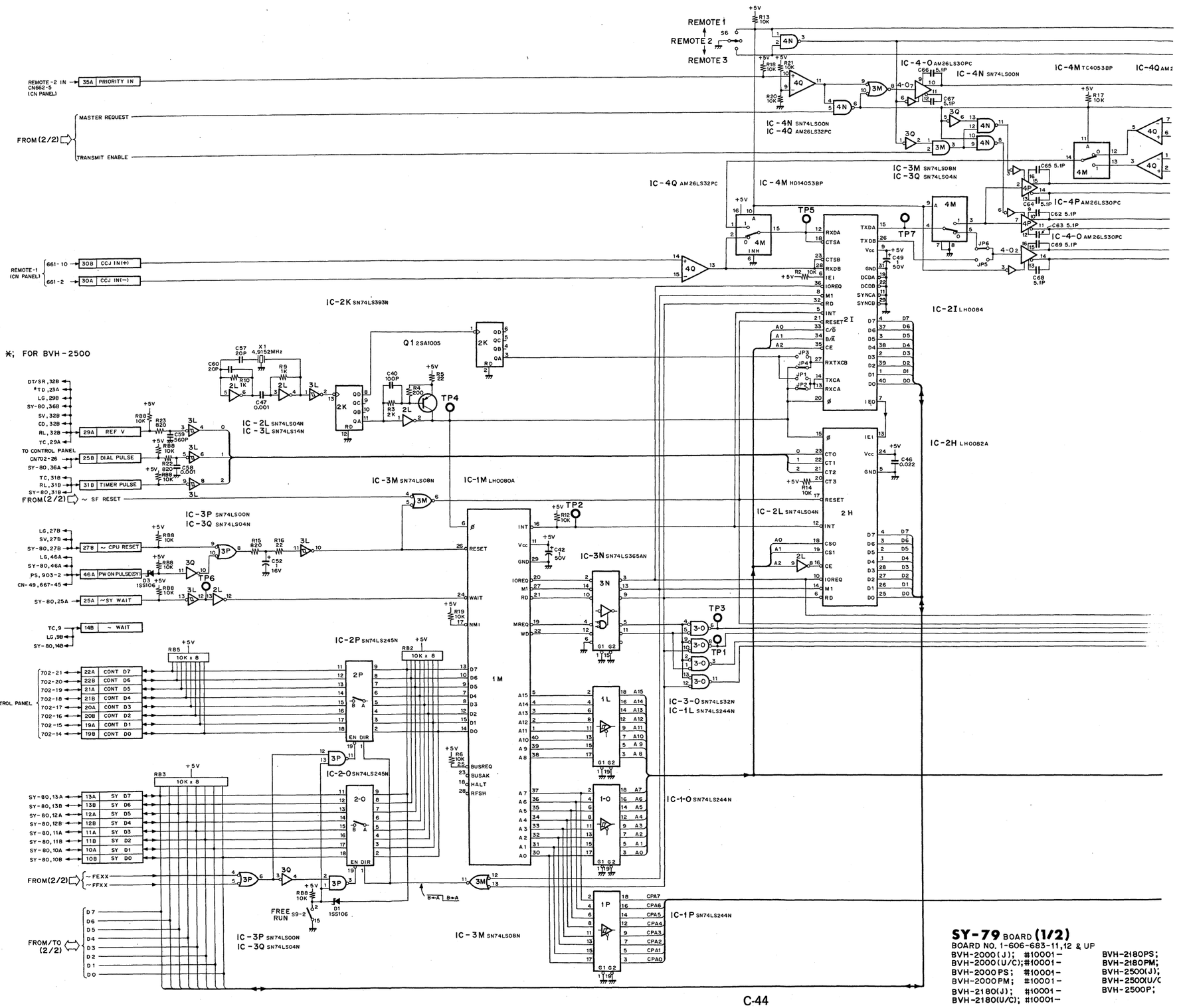

SY-79 BOARD (1/2)
BOARD NO. 1-606-683-11,12 & UP
BVH-2000(J); #10001– BVH-2180PS;
BVH-2000(U/C); #10001– BVH-2180PM;
BVH-2000PS; #10001– BVH-2500(J);
BVH-2000PM; #10001– BVH-2500(U/C
BVH-2180(J); #10001– BVH-2500P;
BVH-2180(U/C); #10001–

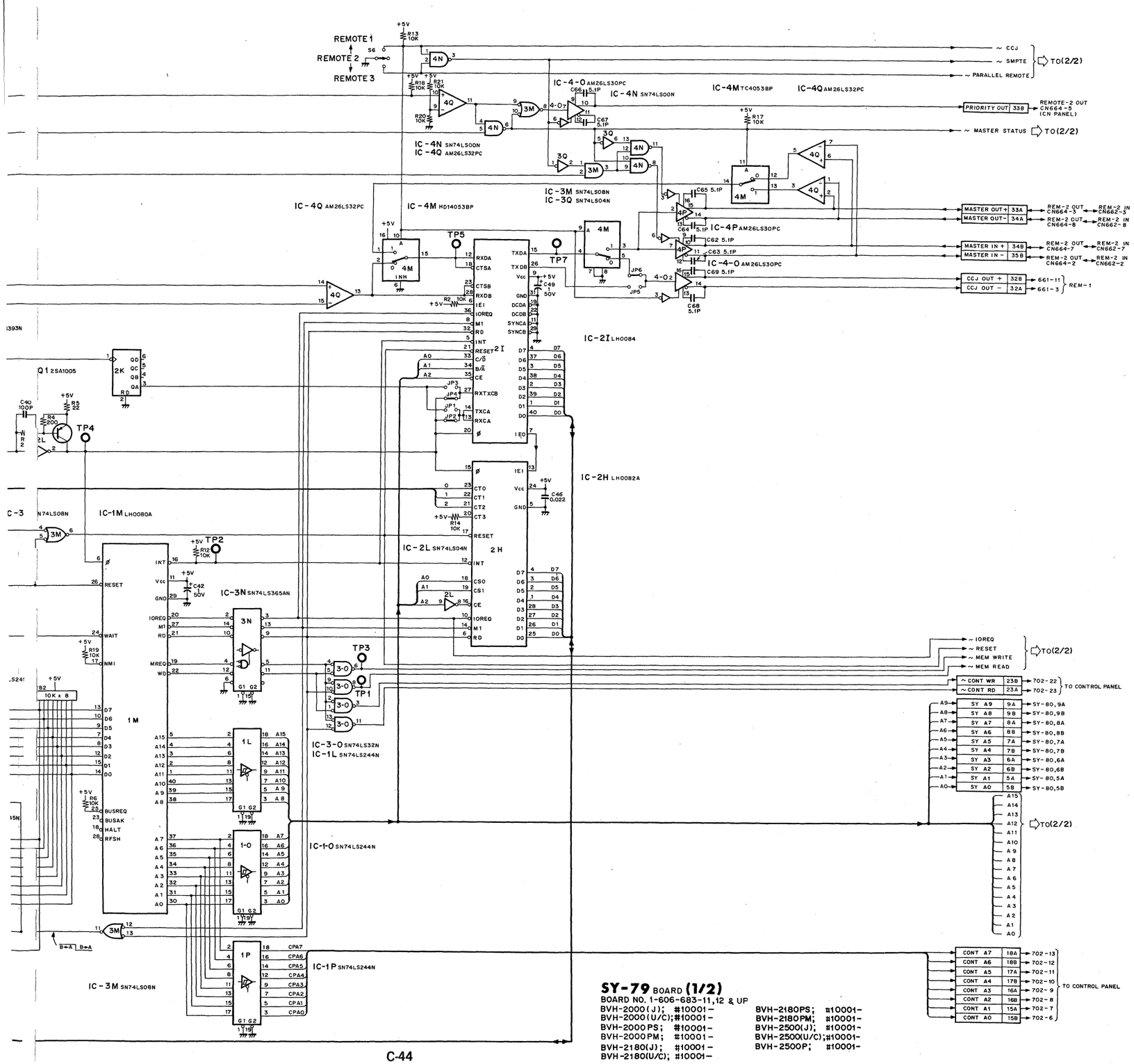

SY-79 BOARD **(1/2)**

BOARD NO. 1-606-683-11,12 & UP

BVH-2000(J); #10001-
BVH-2000(U/C); #10001-
BVH-2000PS; #10001-
BVH-2000PM; #10001-
BVH-2180(J); #10001-
BVH-2180(U/C); #10001-
BVH-2180PS; #10001-
BVH-2180PM; #10001-
BVH-2500(J); #10001-
BVH-2500(U/C); #10001-
BVH-2500P; #10001-

CARD RACK **SY-79 (2/2)** 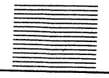 **SY-79 (2/2)** CARD RACK

SY-79 BOARD (2/2)

System Control CPU-1

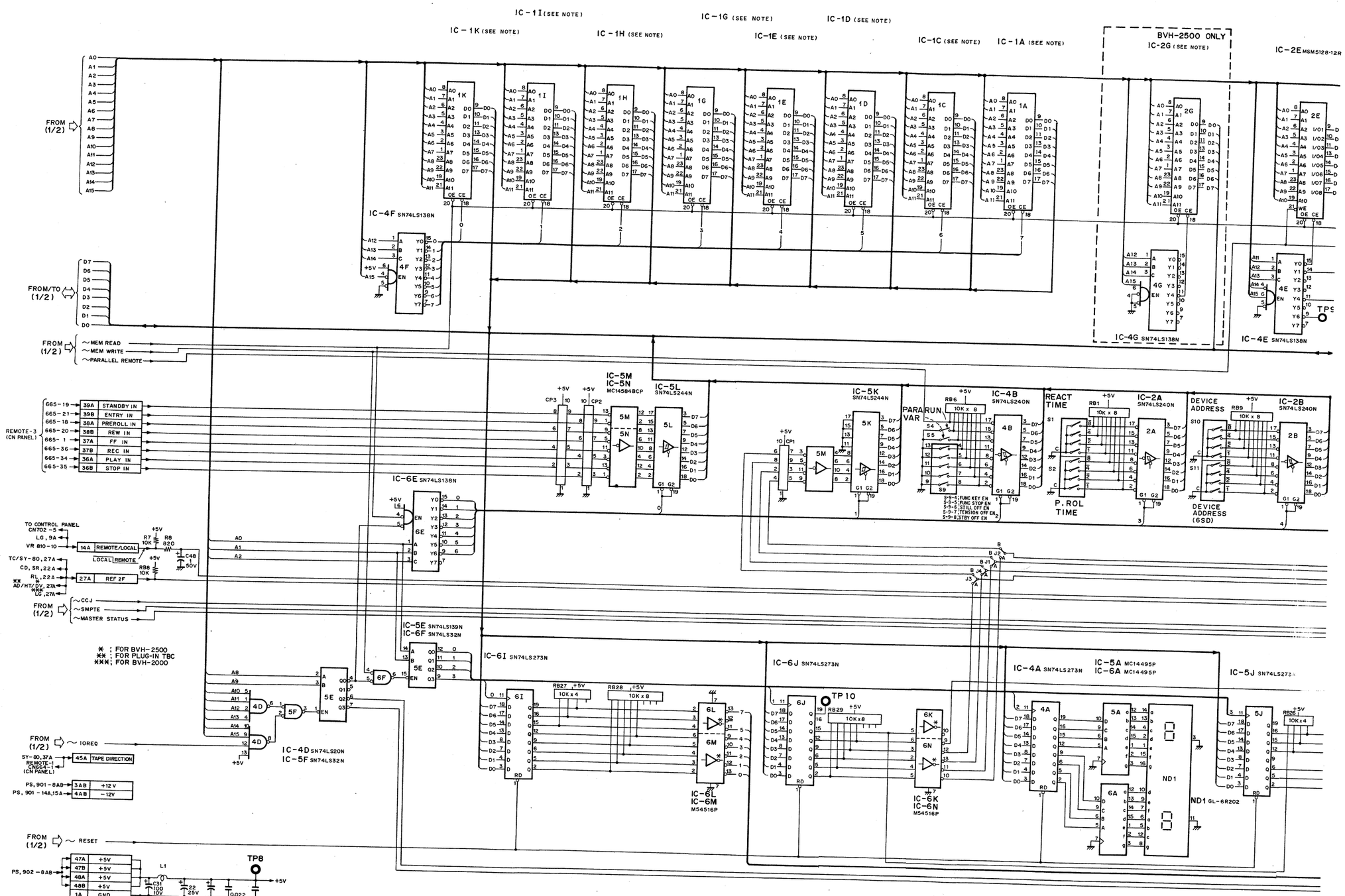

NOTE; EPROM

REF.No.	TYPE No.		
	BVH-2000/PS/PM BVH-2180/PS/PM	BVH-2500	BVH-2500P
IC-1A	*2732-77U3-5	2732-77C2	2732-77D1
IC-1C	2732-76U3-6	2732-76C2	2732-76D1
IC-1D	2732-75U3-5	2732-75C2	2732-75D1
IC-1E	2732-74U3-5	2732-74C2	2732-74D1
IC-1G	2732-73U3-5	2732-73C2	2732-73D1
IC-1H	2732-72U3-5	2732-72C2	2732-72D1
IC-1I(NTSC)	2732-71U3-5	2732-71C2	-----
IC-1I(PS/P)	2732-71A3-5	-----	2732-71D1
IC-1I(PM)	2732-71B3-5	----	-----
IC-1K	2732-70U3-6	2732-70C2	2732-70D1
IC-2G	NOT USED	*2732-7CC2	2732-7CD1

*:IC-2G is added to the BVH-2500 with serial No. shown below.
Japan; #10201 and up
US/Canada; #10301 and up

*:IC-1A is added to the BVH-2000/2180 series with serial No. shown below.
BVH-2000
Japan; #35401 and up
US/Canada; #35701 and up
PM; #30701 and up
PS; #35501 and up
BVH-2180
Japan; #11001 and up
US/Canada; #11101 and up
PM; #10001 and up
PS; #10801 and up

SY-79 BOARD (2/2)
BOARD NO.1-606-683-11,12 & UP

BVH-2000(J);	#10001-	BVH-2500(J);	#10001-
BVH-2000(U/C);	#10001-	BVH-2500(U/C);	#10001-
BVH-2000PS;	#10001-	BVH-2500P;	#10001-
BVH-2000PM;	#10001-		
BVH-2180(J);	#10001-		
BVH-2180(U/C);	#10001-		
BVH-2180PS;	#10001-		
BVH-2180PM;	#10001-		

SY-80 BOARD (1-606-684-13)

Component Side

BVH-2500P

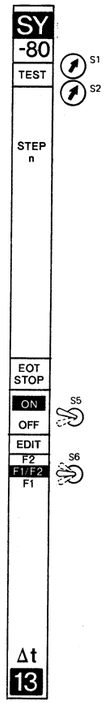

BVH-2500

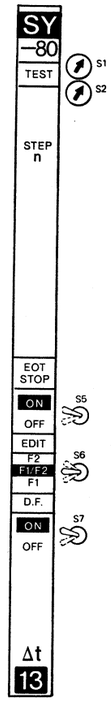

BVH-2000PS
BVH-2180PS

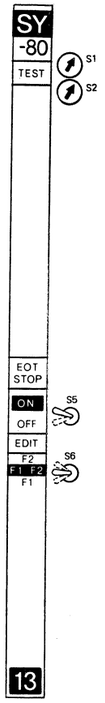

BVH-2000/PM
BVH-2180/PM

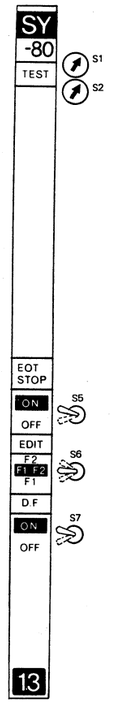

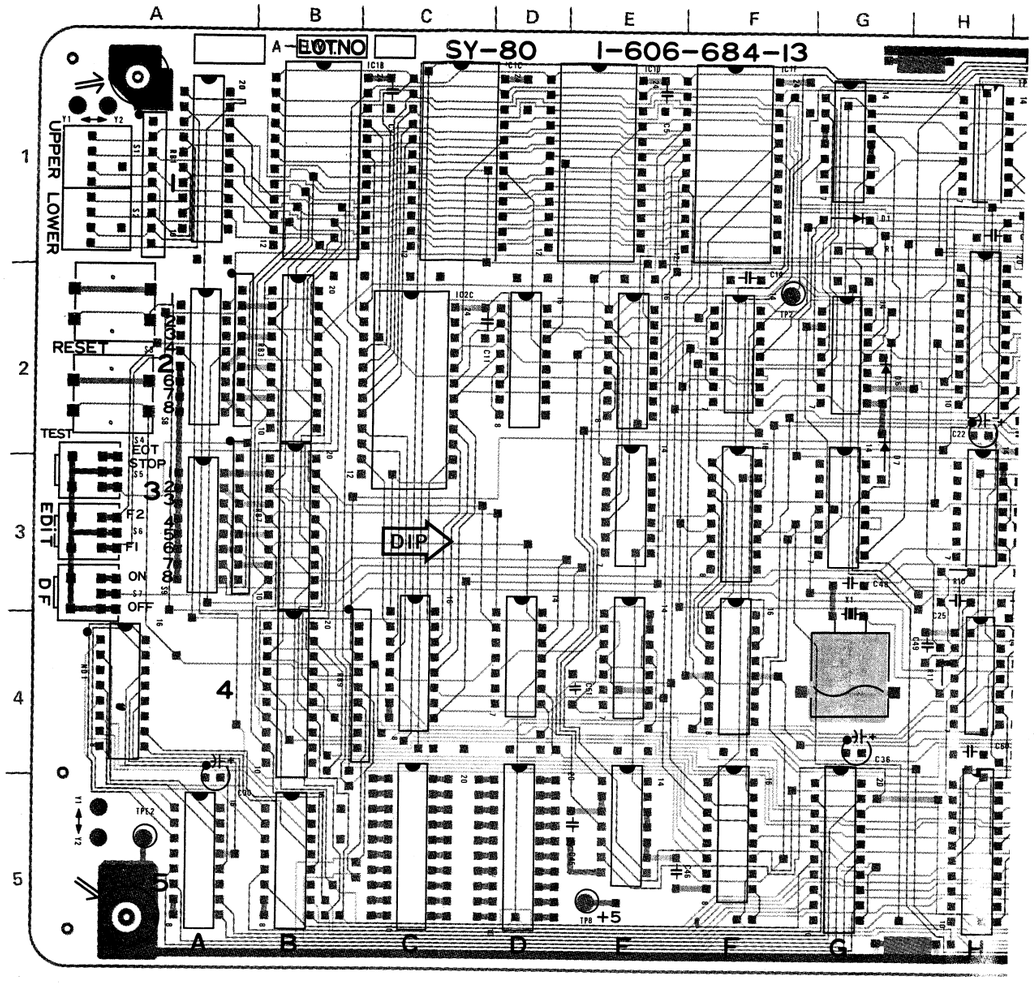

■ 1-606-684-13 COMPONENT SIDE

S1, 2.

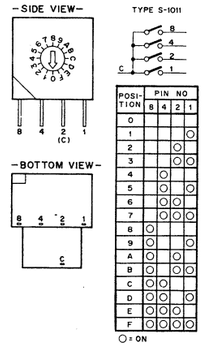

POSITION	PIN NO 8	4	2	1
0				
1				○
2			○	
3			○	○
4		○		
5		○		○
6		○	○	
7		○	○	○
8	○			
9	○			○
A	○		○	
B	○		○	○
C	○	○		
D	○	○		○
E	○	○	○	
F	○	○	○	○

○ = ON

RB1, 2, 3, 4, 5, 6, 7, 8, 9

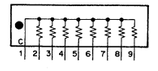

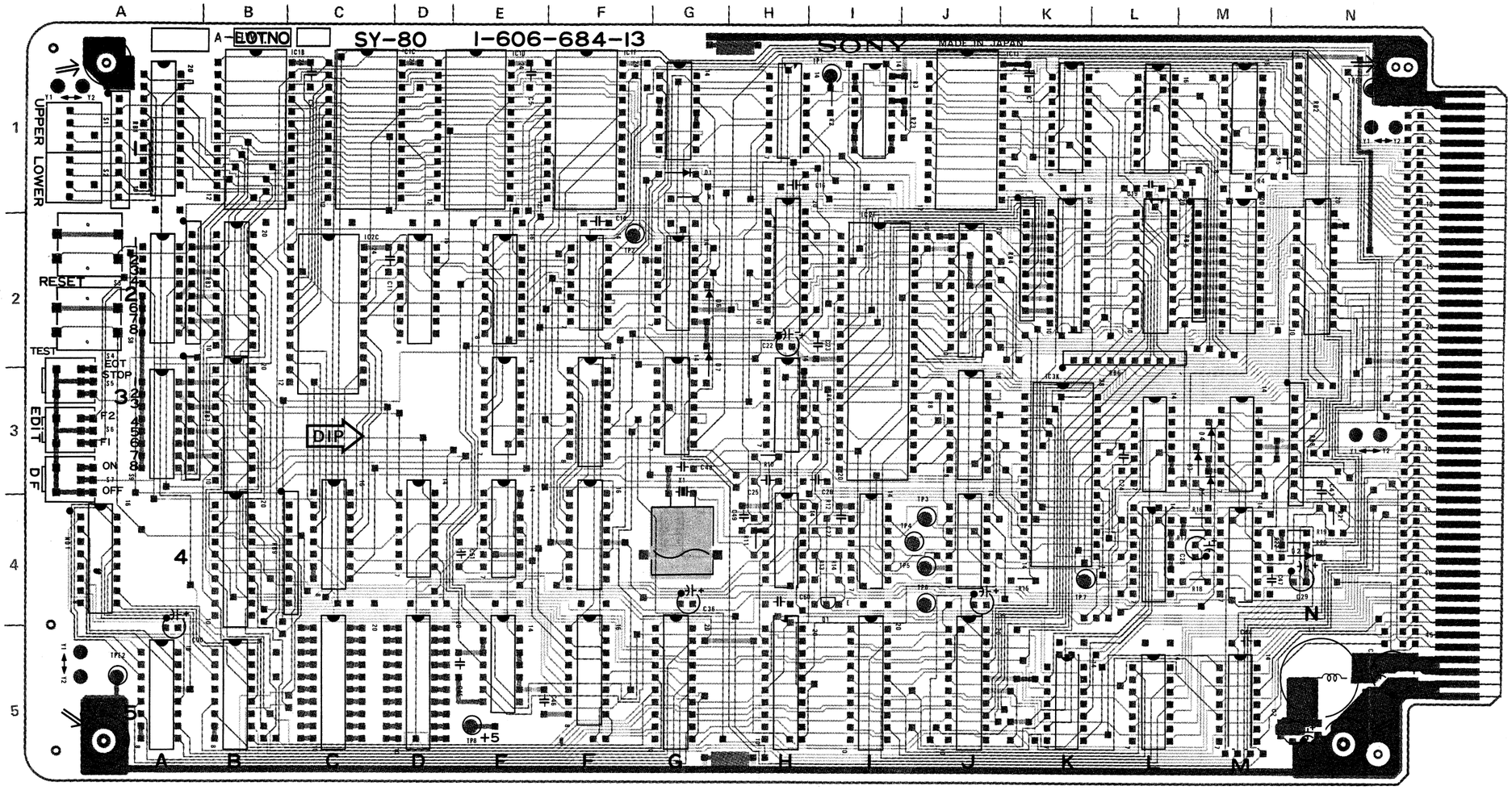

1-606-684-13 COMPONENT SIDE

SY-80 (1-606-684-13 & UP)

BVH-2000/PS/PM
BVH-2180/PS/PM
BVH-2500/P

D1	1G	NO1	4A
D2	4M		
D3	3M	Q1	4I
(BVH-2500/P)		RB1	1A
D4	3M	RB2	1M
D5	3M	RB3	2A
D6	2G	RB4	2K
D7	3G	RB5	2M
		RB6	2L
IC1A		RB7	3A
IC1B		RB8	3M
		RB9	4C
(BVH-2500/P)			
IC1C		S1	1A
		S2	1A
IC1D		S3	2A
IC1F		S4	2A
IC1G		S5	3A
IC1H		S6	3A
IC1I			
IC1J		(NTSC,PM)	
IC1K		S7	3A
IC1L			
IC1M		S8	2A
IC2B		S9	3A
IC2D			
IC2E		TP1	1I
IC2F		TP2	2F
IC2G		TP3	4J
IC2H		TP4	4J
IC2I		TP5	4J
IC2J		TP6	4J
IC2K		TP7	4K
IC2L		TP8	5E
IC2M			
IC2N		TPE1	1M
IC3B		TPE2	5A
IC3E		TPE3	5M
IC3F			
IC3G		X1	4G
IC3H			
IC3J			
IC3K			
IC3L			
IC3M			
IC4B			
IC4C			
IC4D			
IC4E			
IC4F			
IC4H			
IC4I			
IC4J			
IC4L			
IC4M			
IC5A			
IC5B			
IC5E			
IC5F			
IC5G			
IC5H			
IC5I			
IC5J			
IC5K			
IC5L			
IC5M			

1-606-684-13

S1, 2.

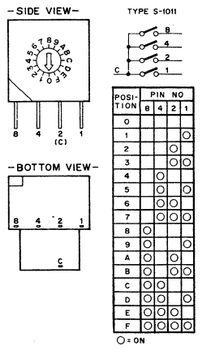

RB1, 2, 3, 4, 5, 6, 7, 8, 9

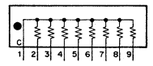

SY-80 BOARD

System Control CPU-2

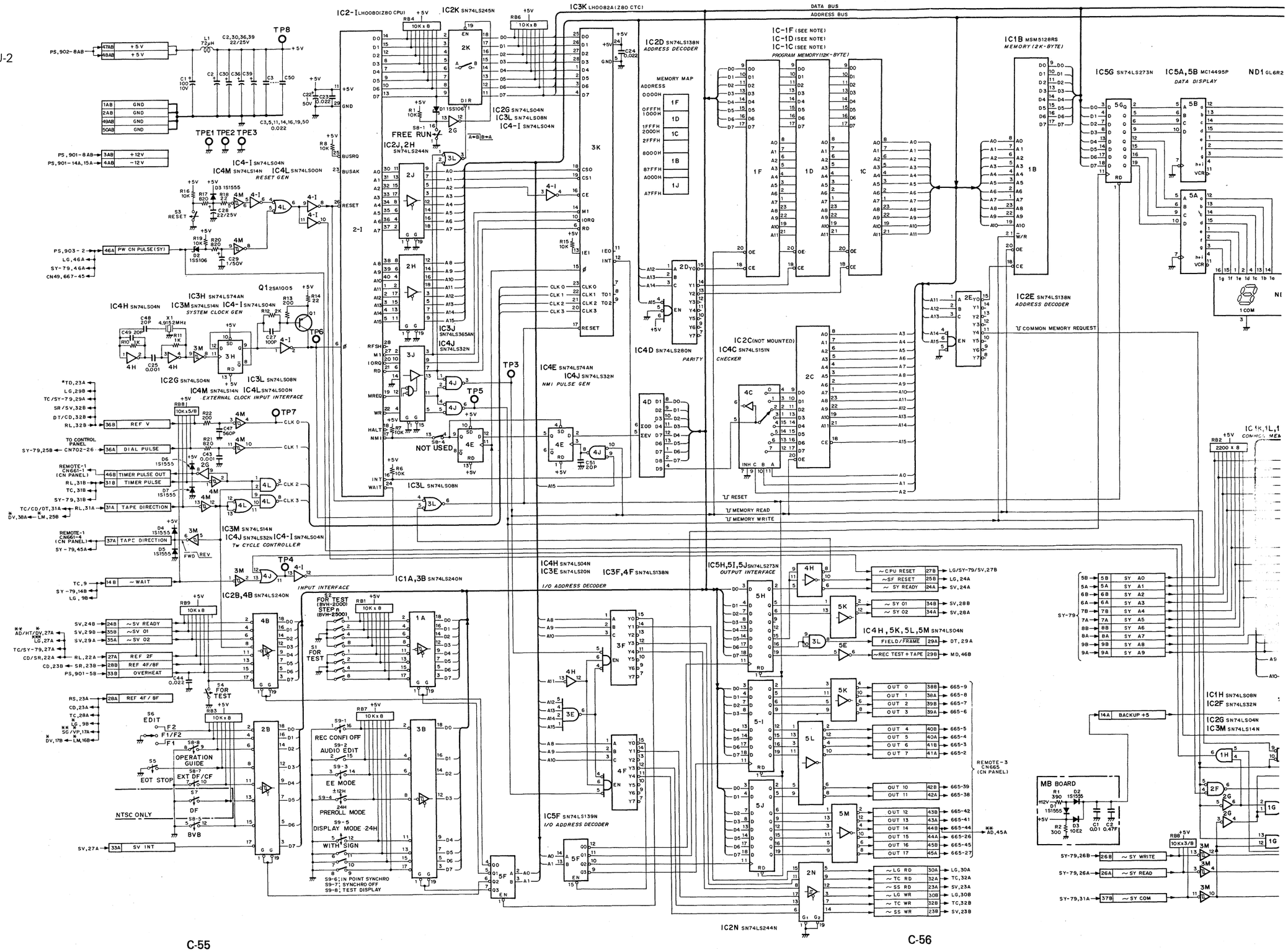

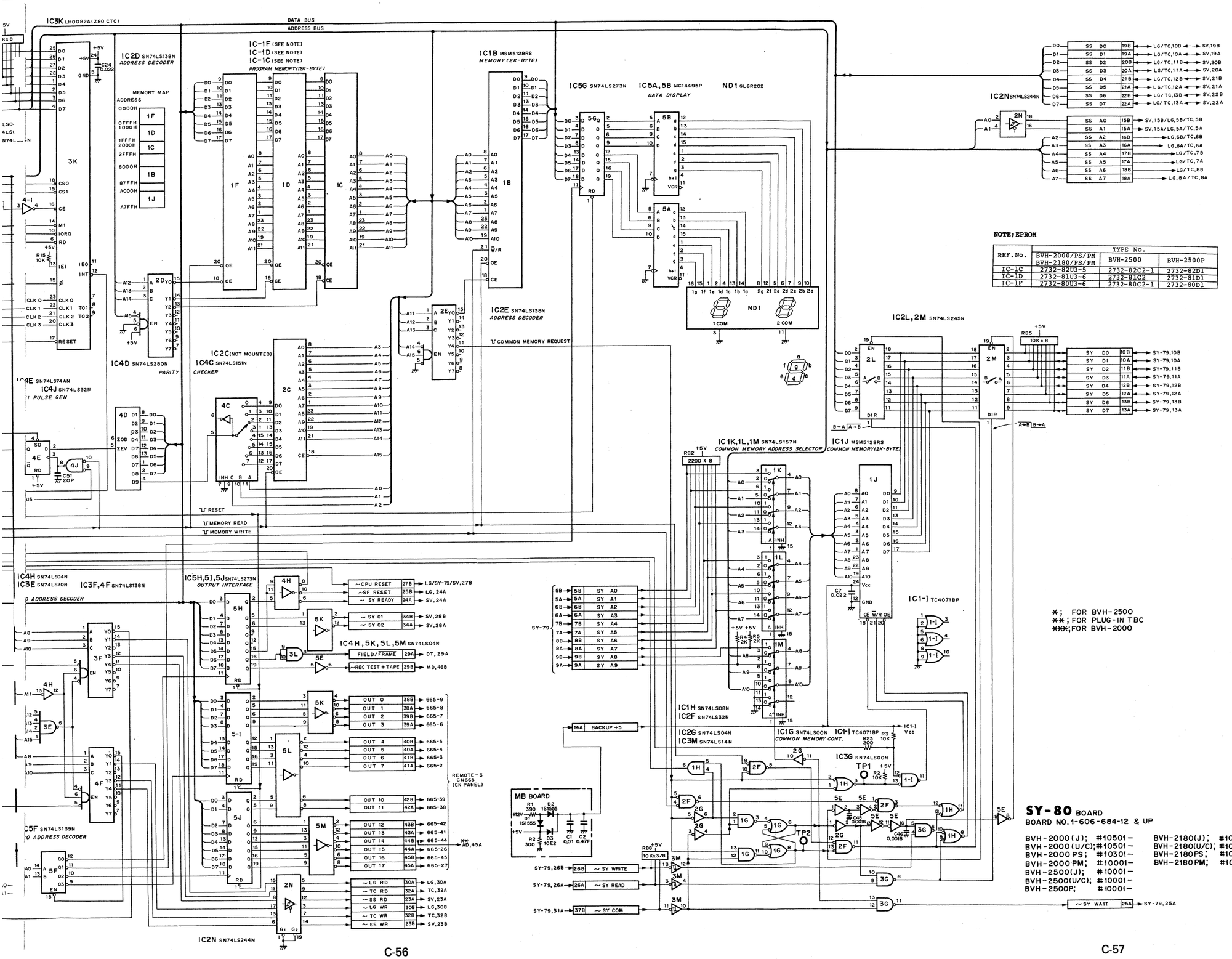

NOTE; EPROM

REF. No.	TYPE No. BVH-2000/PS/PM BVH-2180/PS/PM	TYPE No. BVH-2500	TYPE No. BVH-2500P
IC-1C	2732-82U3-5	2732-82C2-1	2732-82D1
IC-1D	2732-81U3-6	2732-81C2	2732-81D1
IC-1F	2732-80U3-6	2732-80C2-1	2732-80D1

*; FOR BVH-2500
**; FOR PLUG-IN TBC
~~XX~~; FOR BVH-2000

SY-80 BOARD
BOARD NO. 1-606-684-12 & UP

BVH-2000(J);	#10501-	BVH-2180(J);	#10001-
BVH-2000(U/C);	#10501-	BVH-2180(U/C);	#10001-
BVH-2000PS;	#10301-	BVH-2180PS;	#10001-
BVH-2000PM;	#10001-	BVH-2180PM;	#10001-
BVH-2500(J);	#10001-		
BVH-2500(U/C);	#10001-		
BVH-2500P;	#10001-		

SV-43 BOARD (1-606-703-12)

Component Side

BVH-2500/P

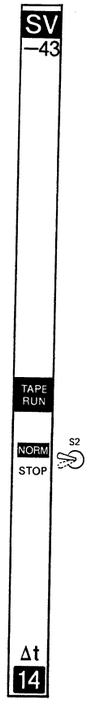

BVH-2000/PS/PM
BVH-2180/PS/PM

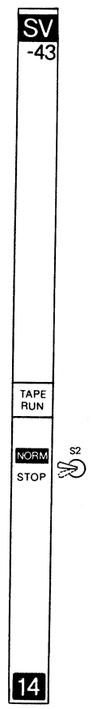

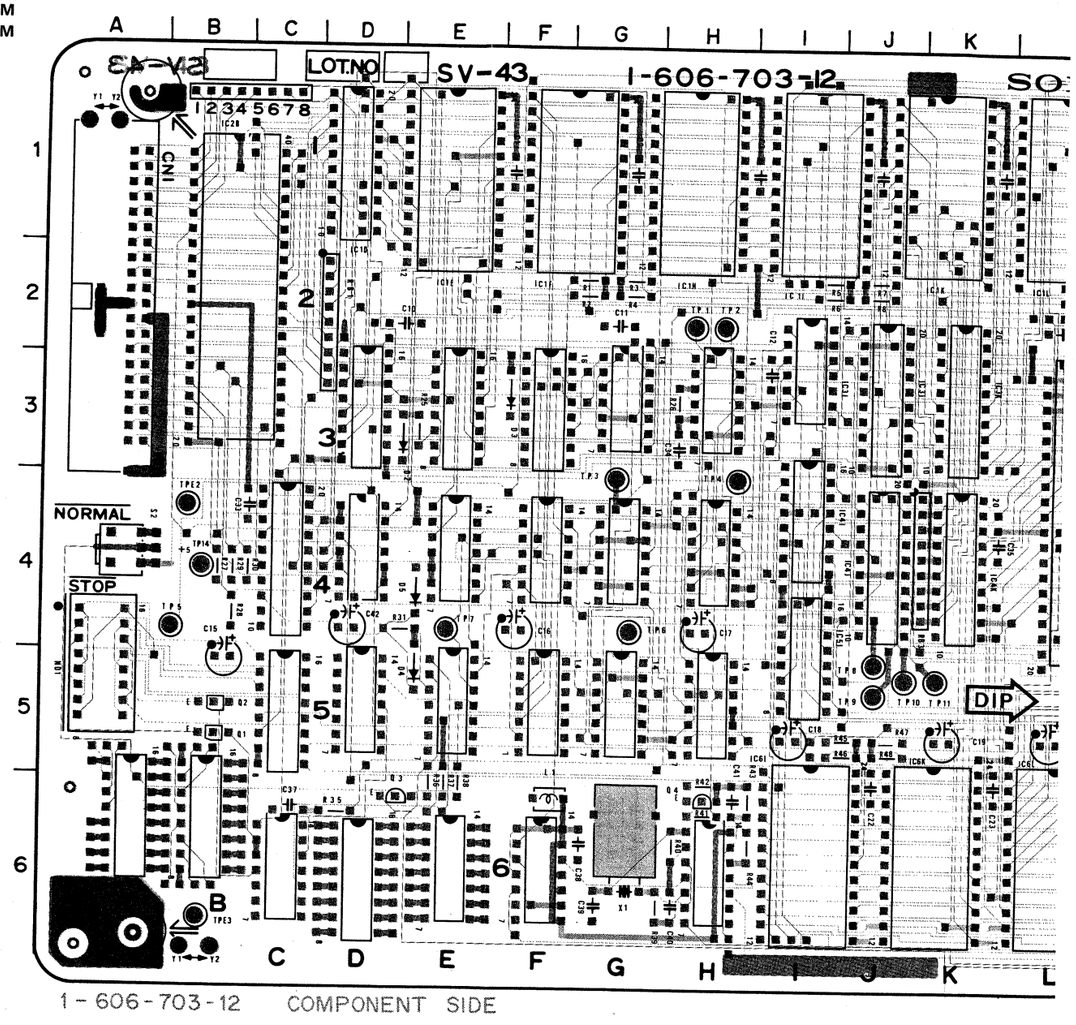

1 - 606 - 703 - 12 COMPONENT SIDE

RB1, 2, 3, 4, 5

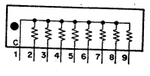

BVH-2500/P

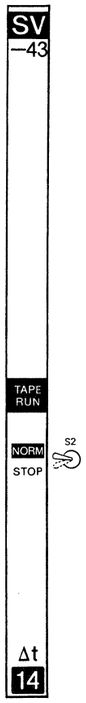

BVH-2000/PS/PM
BVH-2180/PS/PM

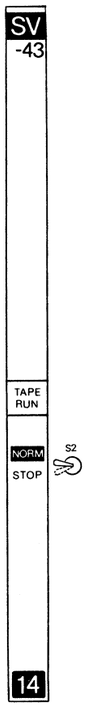

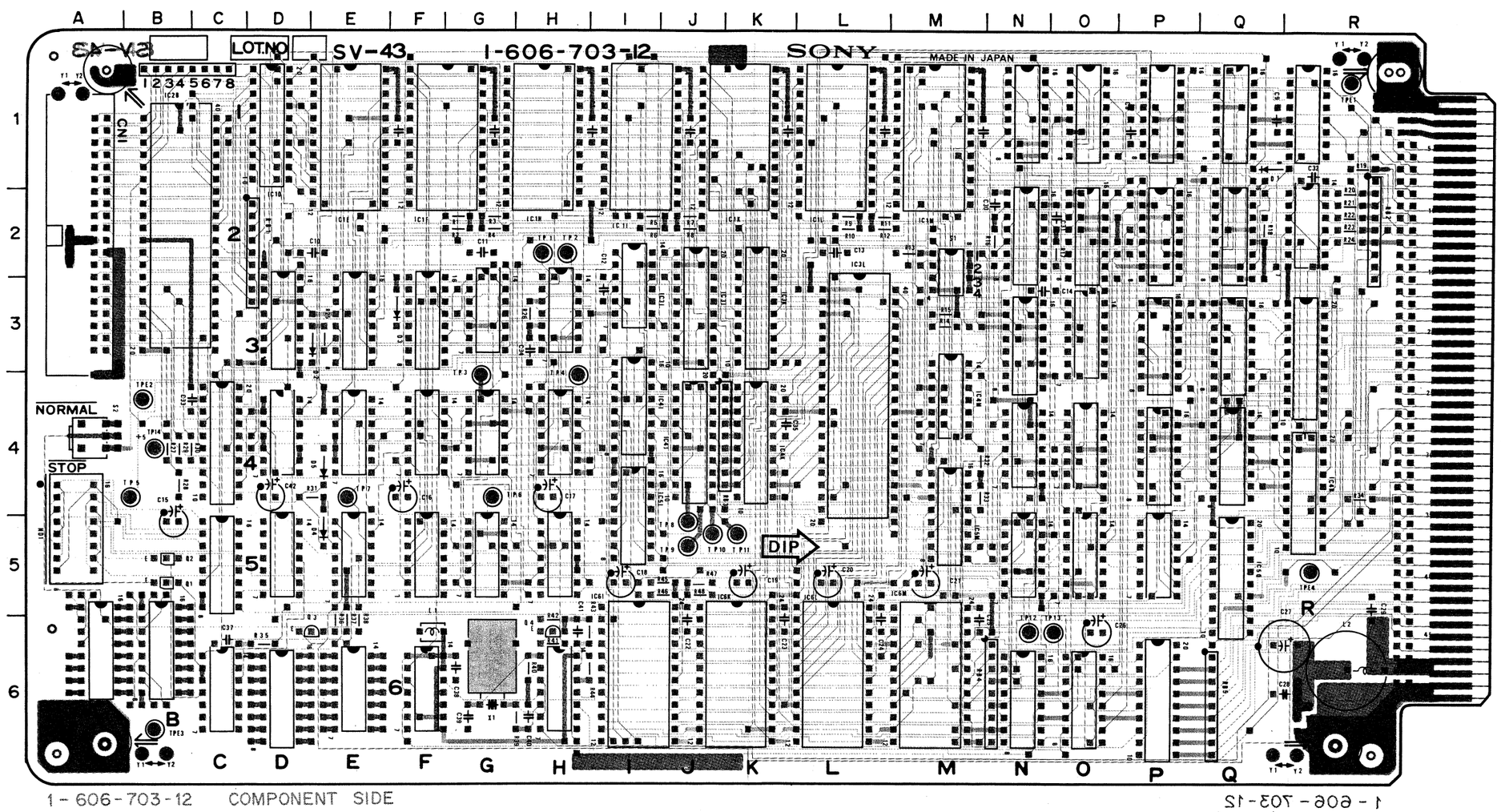

SV-43 (1-606-703-12 & UP)

BVH-2000/PS/PM		IC5F	
BVH-2180/PS/PM		IC5G	
BVH-2500/P		IC5H	
		IC5I	
CN1M	2A	IC5M	
		IC5N	
D1	1Q	IC5O	
D2	3E	IC5P	
D3	3F	IC5Q	
D4	5E	IC6C	
D5	4E	IC6F	
		IC6H	
IC1D		IC6I	
IC1E		IC6K	
IC1F		IC6M	
IC1H		IC6N	
IC1I		IC6O	
IC1M		IC6P	
IC1N			
IC1O		ND1	5A
IC1P			
IC1Q		Q1	5B
IC1R		Q2	5B
IC2B		Q3	6E
IC2N		Q4	6H
IC2O			
IC2P		RB1	2D
IC2Q		RB2	2R
IC2R		RB3	4K
IC3D		RB4	6N
IC3E		RB5	6Q
IC3F			
IC3G		S1	2M
IC3H		S2	4A
IC3I			
IC3J		TP1	2H
IC3K		TP2	2H
IC3L		TP3	4G
IC3N		TP4	4H
IC3O		TP5	4B
IC3P		TP6	4G
IC3Q		TP7	4E
IC3R		TP8	5J
IC4C		TP9	5J
IC4D		TP10	5J
IC4E		TP11	5K
IC4F		TP12	6N
IC4G		TP13	6O
IC4H		TP14	4B
IC4I			
IC4J		TPE1	1R
IC4K		TPE2	4B
IC4M		TPE3	6B
IC4N		TPE4	5R
IC4O			
IC4P		X1	6G
IC4Q			
IC4R			
IC5C			
IC5D			
IC5E			

RB1, 2, 3, 4, 5

SV-43 BOARD
Servo CPU

IC6P SN74LS245N IC5Q SN74LS244N

ND1 GL-6R202

IC1P TC40174BP IC5C MC14495P (7-SEGMENT DECODER) IC6C SN74LS04N Q1,Q2 2SA1175 DATA DISPLAY IC1R TC4049BP

BUS SEPARATOR

HARD CPU DATA BUS

IC-5D SN74LS74AN

OUTPUT BUFFER

IC2-0 SN74LS139N IC4N SN74LS08N IC5N SN74LS32N IC2R SN74LS04N I/O ADDRESS DECODER

IC3L LH0080 (Z80CPU) HARD CPU

HARD CPU ADDRESS BUS

IC4G SN74LS02N IC3-I SN74LS32N IC4H SN74LS08N HARD CPU BUS REQUEST GEN

IC4K SN74LS245N

IC3K,3J,4J SN74LS244N

IC3H SN74LS10N BUS CONNECT CONT

IC4J SN74LS244N

IC4M SN74LS74AN IC2R SN74LS04N Tw CYCLE CONTROLLER

IC5N SN74LS32N INTERRUPT PULSE GEN

IC2R SN74LS04N

IC5Q SN74LS244N

IC5P SN74LS02N IC3-0 SN74LS04N IC4-0 SN74LS32N

IC1N TC4520BP IC2N MC14538BCP

IC1-0 SN74LS138N (3-TO-8 DECODER) IC2-0 SN74LS139N

IC1Q TC40174BP IC1R TC4049BP IC2R SN74LS04N

IC2P,2Q,6N MC14503BCP

IC4F SN74LS04N

IC3P,30,4P,4Q SN74LS670N (4-BY-4 REGISTOR)

IC3R,4R SN74LS244N SERVO-SYS INTERFACING MEMORY (4-BYTE)

IC3-0 SN74LS04N IC6H SN74LS04N

IC6-I (SEE NOTE) IC6K (SEE NOTE)

IC5M SN74LS139N IC4N SN74LS08N IC4-0 SN74LS32N ADDRESS DECODER

IC6M MSM5128RS RAM (2K-BYTE)

IC4-0 SN74LS32N IC4N SN74LS08N IC5M SN74LS139N ADDRESS DECODER

IC6-0 TC40174BCP I/O INTERFACE

IC5-0 SN74LS00N

IC5P SN74LS02N IC5-0 SN74LS00N HARD RESET GEN

Q3 2SC1364

IC6D MC14503BCP

PROGRAM ERROR DET

ADDRESS DECODER

OUTPUT BUFFER

FOR BVH-2180

RS-17,042-1	18B	+5V
RS-17,042-2	16A	GND
RS-17,042-14	17A	TRS
RS-17,042-5	18A	SRS

SV D0	41B	RL/CD/SR,41B
SV D1	41A	RL/CD/SR,41A
SV D2	42B	RL/CD/SR,42B
SV D3	42A	RL/CD/SR,42A
SV D4	43B	RL/CD/SR,43B
SV D5	43A	RL/CD/SR,43A
SV D6	44B	RL/CD/SR,44B
SV D7	44A	RL/CD/SR,44A
RL CS	35A	RL,35B
CD CS	35B	CD,35B
SV A0	37B	RL/CD/SR,37B
SV A1	37A	RL/CD/SR,37A
SV A2	38B	RL/CD/SR,38B
SV A3	38A	RL/CD/SR,38A
SV A4	39B	RL/CD/SR,39B
SV A5	39A	RL/CD/SR,39A
TAPE HOURS	12B	TM,022-3 (TTP)
WRITE	36B	RL/CD/SR,36B
READ	36A	RL/CD/SR,36A
HEAD HOURS	11A	HM-05,021-2
IP DRIVE	6A	TT,010-8B
BRAKE SOL	5B	TT,010-15A
PINCH SOL	6B	TT,010-15B
THREAD CONT	7A	TD,436 TT,010-7A
MINI ARM SOL	11B	TT,010-16A
SV READY	24B	SV-80,24B
SV 02	29A	SV-80,35A
HARD RESET	9A	CA,101-7A

RL,34B	34B	V/8
SY-80,34B	28B	~ SY 01
SY-80,34A	28A	~ SY 02
TT,010-14B	9B	TAPE DET
TT,010-7B	8B	THREAD SW
TT,010-8A	8A	UNTHREAD SW
RA,203-12A	13B	REEL TEMPER
MB,325-10B	10A	SPR IN

SS D0	19B	SY-80,19B ↔ LG/TC,10B
SS D1	19A	SY-80,19A ↔ LG/TC,10A
SS D2	20B	SY-80,20B ↔ LG/TC,11B
SS D3	20A	SY-80,20A ↔ LG/TC,11A
SS D4	21B	SY-80,21B ↔ LG/TC,12B
SS D5	21A	SY-80,21A ↔ LG/TC,12A
SS D6	22B	SY-80,22B ↔ LG/TC,13B
SS D7	22A	SY-80,22A ↔ LG/TC,13A
~ SS RD	23A	SY-80,23A
~ SS WR	23B	SY-80,23B
SS A0	15B	SY-80,15B → LG/TC,5B
SS A1	15A	SY-80,15A → LG/TC,5A
~ SV INT	27A	SY-80,33A
SV 01	29B	SY-80,35B
10MHz CLOCK(X)	34A	CD,34B
10MHz CLOCK (G)	33A	RL,34A RL,33A/CD,33B

CA,101-8A	12A	OVERHEAT
RL,5B	5A	BOARD (X)
DA,111-8B	10B	BOARD (Y)

IORQ WR RD MREQ HARD CPU SYSTEM CONTROL BUS

RESET Ø

TP10 TP12 TP9 TP11

REF.No.	TYPE No.		
	BVH-2000/PS/PM	BVH-2180/PS/PM	BVH-2500/P
IC1E	MBM2732-S1U3-9	MBM2732-S1Q1-3	MBM2732-S1C3-2
IC1F	MBM2732-S2U3	MBM2732-S2Q1	MBM2732-S2C3
IC1H	MBM2732-S3U3-6	MBM2732-S3Q1	MBM2732-S3C3-1
IC1-I	MBM2732-S4U3	MBM2732-S4Q1	MBM2732-S4C3
IC6-I	MBM2732-S7U3-8	MBM2732-S7Q1-2	MBM2732-S7C3
IC-6K	MBM2732-S8U3-2	MBM2732-S8Q1	MBM2732-S8C3

*; FOR BVH-2500

SV-43 BOARD
BOARD NO. 1-606-703-11/12 &UP
BVH-2000(J); #10001-
BVH-2000(U/C); #10001-
BVH-2000PS; #10001-
BVH-2000PM; #10001-
BVH-2500(J); #10001-
BVH-2500(U/C); #10001-
BVH-2500P; #10001-
BVH-2180(J); #10001-
BVH-2180(U/C); #10001-
BVH-2180PS; #10001-
BVH-2180PM; #10001-

RL-12 BOARD (1-606-704-13)

Component Side

BVH-2500P

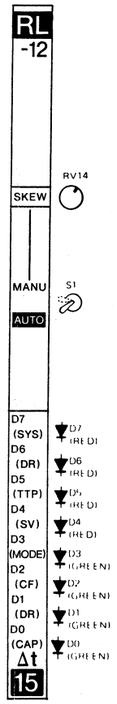

BVH-2000/PS/PM
BVH-2180/PS/PM
BVH-2500

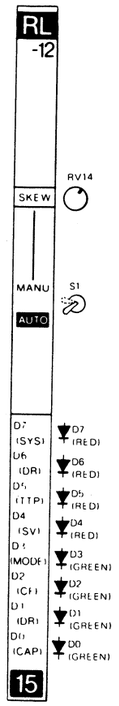

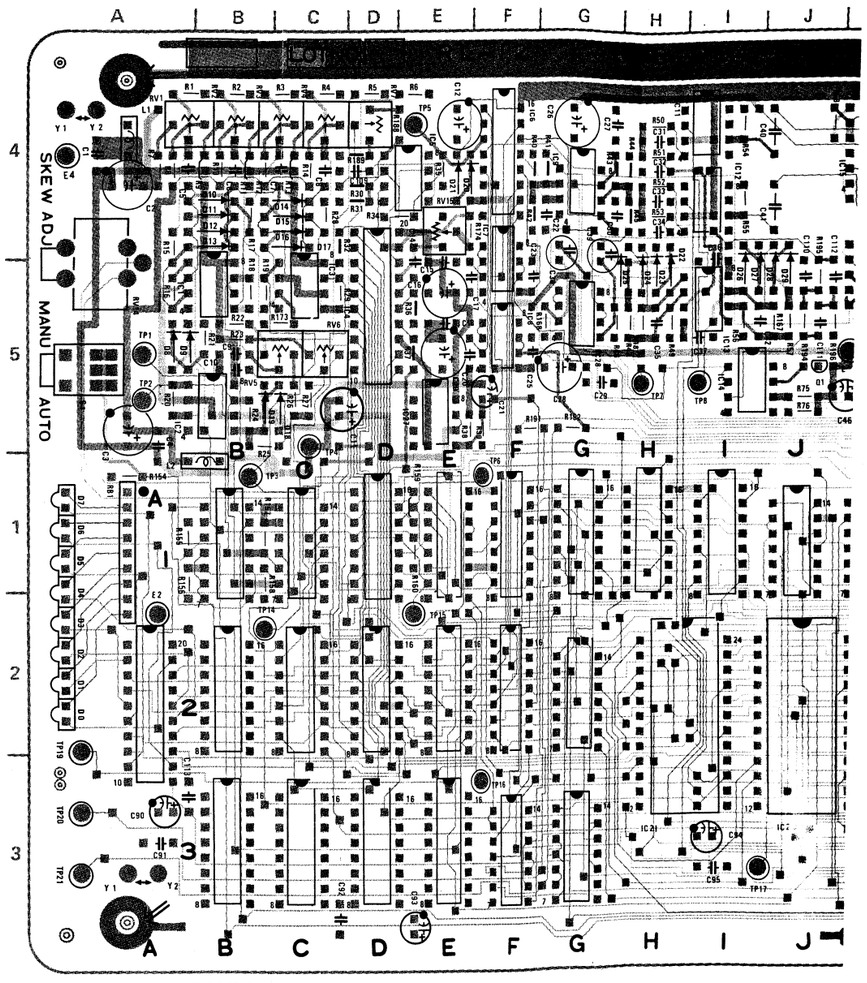

■ 1-606-704-13 COMPONENT SIDE

RB1

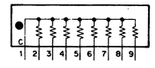

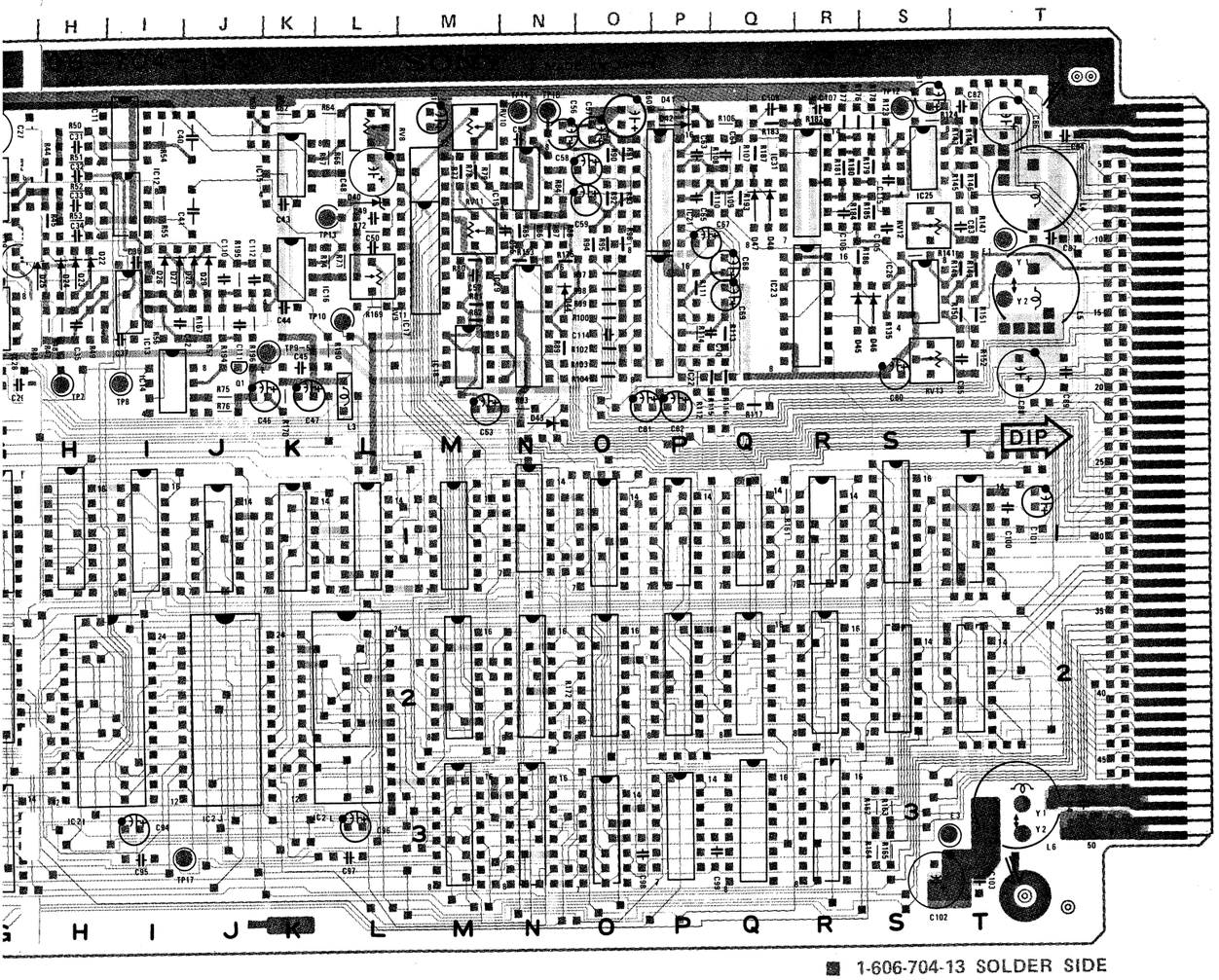

■ 1-606-704-13 SOLDER SIDE

RS-20 BOARD (1-615-381-11)

Solder Side

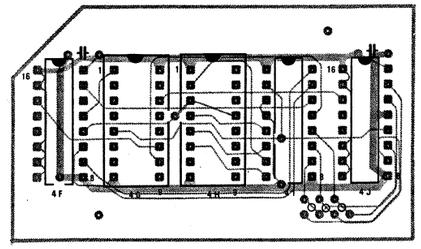

■ 1-615-381-11 COMPONENT SIDE

■ 1-615-381-11 SOLDER SIDE

RS-19 BOARD (1-613-752-11)

Solder Side

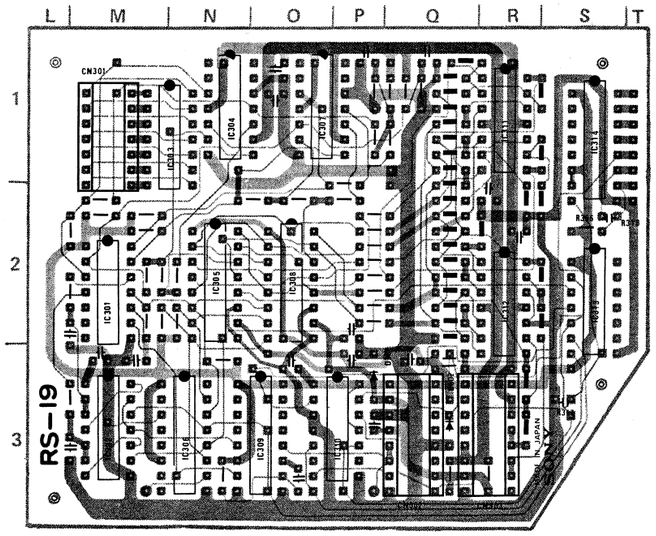

■ 1-613-752-11 COMPONENT SIDE

■ 1-613-752-11 SOLDER SIDE

FOR BVH-2500P

RL-12 (1-606-704-13)

BVH-2000/PS/PM
BVH-2180/PS/PM
BVH-2500/P

(RS-19 BOARD)		IC3	5C
CN301	1M	IC3F	
CN302	3Q	IC3G	
CN303	3R	IC3M	
		IC3N	
D0	2A	IC30	
D1	2A	IC3P	
D2	2A	IC4	5D
D3	2A		
D4	1A	(RS-20 BOARD)	
D5	1A	IC4F	
D6	1A	IC4I	
D7	1A	IC4J	
D8	5A		
D9	5A	IC5	4E
D10	4B	IC6	4F
D11	4B	IC7	4F
D12	4B	IC8	5F
D13	4B	IC9	4G
D14	4C	IC11	4I
D15	4C	IC12	4I
D16	4C	IC13	5I
D17	4C	IC14	5I
D18	5C	IC15	4K
D19	5B	IC16	5K
D20	4E	IC17	5M
D21	4E	IC18	5M
D22	5H	IC19	4N
D23	5H	IC21	4P
D24	5H	IC22	5P
D25	5H	IC23	5R
D26	5I	IC25	4S
D27	5I	IC26	5S
D28	5J	IC27	5E
D29	5J	IC28	5G
D40	4I	IC29	5N
D43	5N	IC31	4R
D44	5N		
D45	5S	(RS-19 BOARD)	
D46	5S	IC301	2M
D47	4Q	IC302	2M
D48	4Q	IC303	1N
D50	5H	IC304	1N
D51	5H	IC305	2N
		IC306	3N
(RS-19 BOARD)		IC307	1P
D301	3P	IC308	2O
		IC309	3O
E1	4T	IC310	3P
E2	2A	IC311	1R
E3	3T	IC312	2R
E4	4A	IC313	2S
		IC314	1S
IC1	5B		
IC1B		Q1	5J
IC1C			
IC1D		(RS-19 BOARD)	
IC1E		Q302	3Q
IC1F			
IC1G		RB1	1A
IC1H			
IC1I		RV1	4A
IC1J		RV2	4B
IC1K		RV3	4C
IC1L		RV4	4C
IC1M		RV5	5C
IC1N		RV6	5C
IC1O		RV7	4D
IC1P		RV8	4L
IC1Q		RV9	5L
IC1R		RV10	4M
IC1S		RV11	4M
IC1T		RV12	4S
IC2	5B	RV13	5S
IC2A		RV14	5A
IC2C		RV15	4E
IC2D		RV20	4O
IC2E			
IC2F		S1	5A
IC2G			
IC2I		TP1	5A
IC2J		TP2	5A
IC2L		TP3	1B
IC2M		TP4	5C
IC2N		TP5	4E
IC2O		TP6	1F
IC2P		TP7	5H
IC2Q		TP8	5I
IC2R		TP9	5K
IC2S		TP10	5L
IC2T		TP11	4N
		TP12	4S
		TP13	4L
		TP14	2B
		TP15	2E
		TP16	3F
		TP17	3I
		TP18	4N
		TP19	2A
		TP20	3A
		TP21	3A

RL-12 BOARD (1/2)

Reel Servo

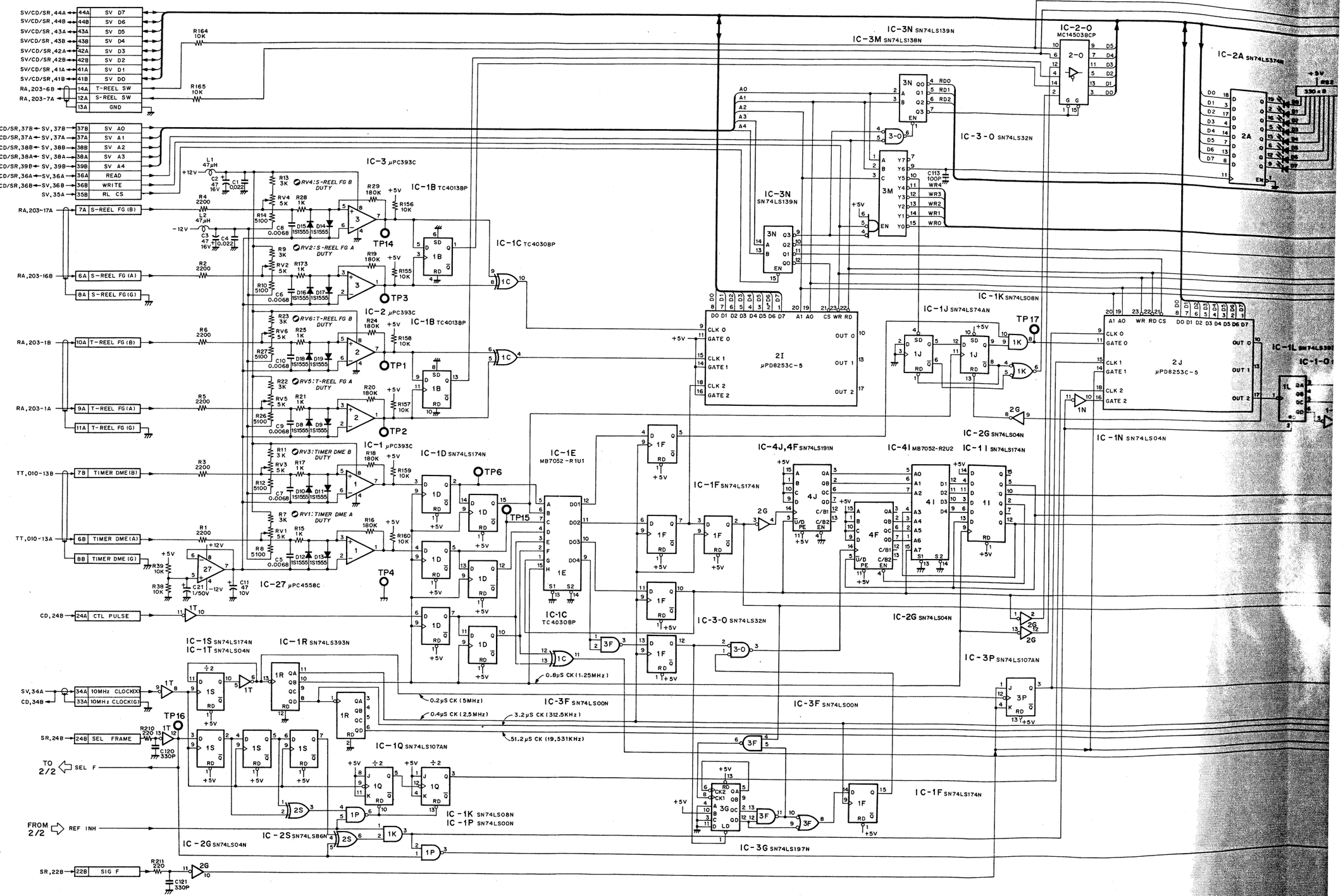

2500(J); #10601 – #10799 2500(U/C); #11101 – #11399 1-606-704-13 CARD RACK RL-12 (1/2)

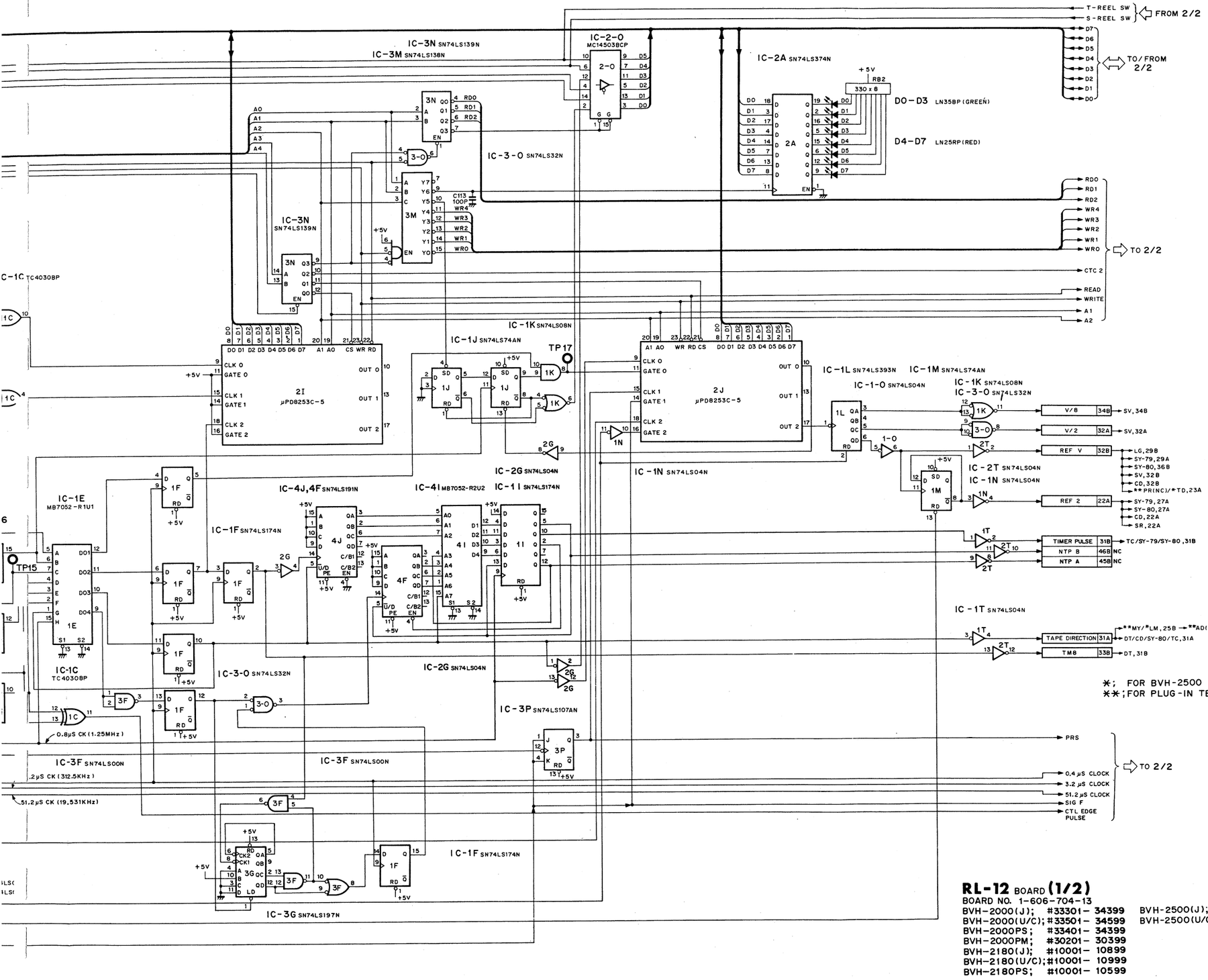

RL-12 BOARD (1/2)
BOARD NO. 1-606-704-13

BVH-2000(J); #33301 – 34399	BVH-2500(J); #10601 – #10799
BVH-2000(U/C); #33501 – 34599	BVH-2500(U/C); #11101 – #11399
BVH-2000PS; #33401 – 34399	
BVH-2000PM; #30201 – 30399	
BVH-2180(J); #10001 – 10899	
BVH-2180(U/C); #10001 – 10999	
BVH-2180PS; #10001 – 10599	

RL-12 BOARD (2/2)

Reel Servo

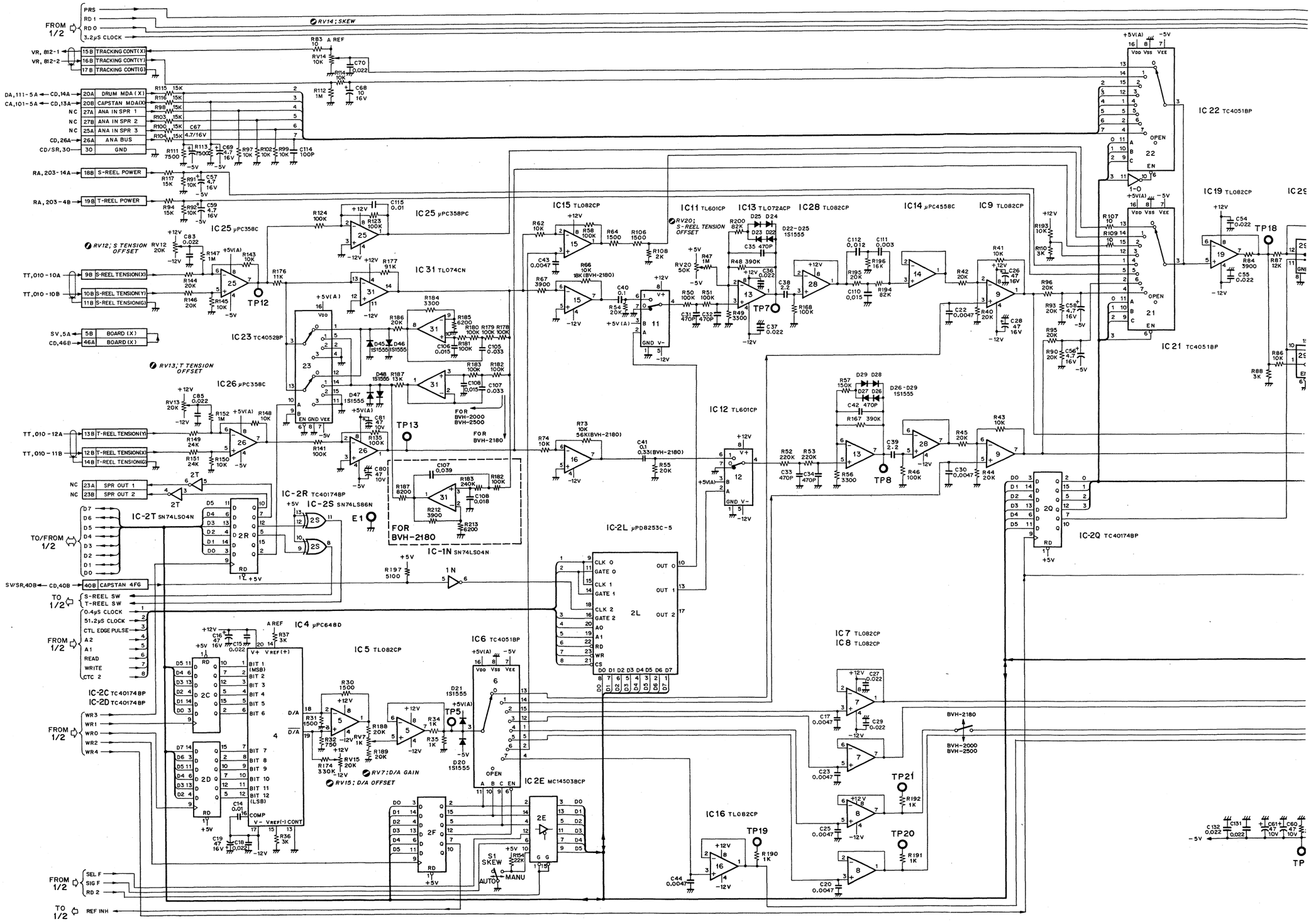

2500(J); #10601 – #10799 2500(U/C); #11101 – #11399 1-606-704-13 CARD RACK RL-12 (2/2)

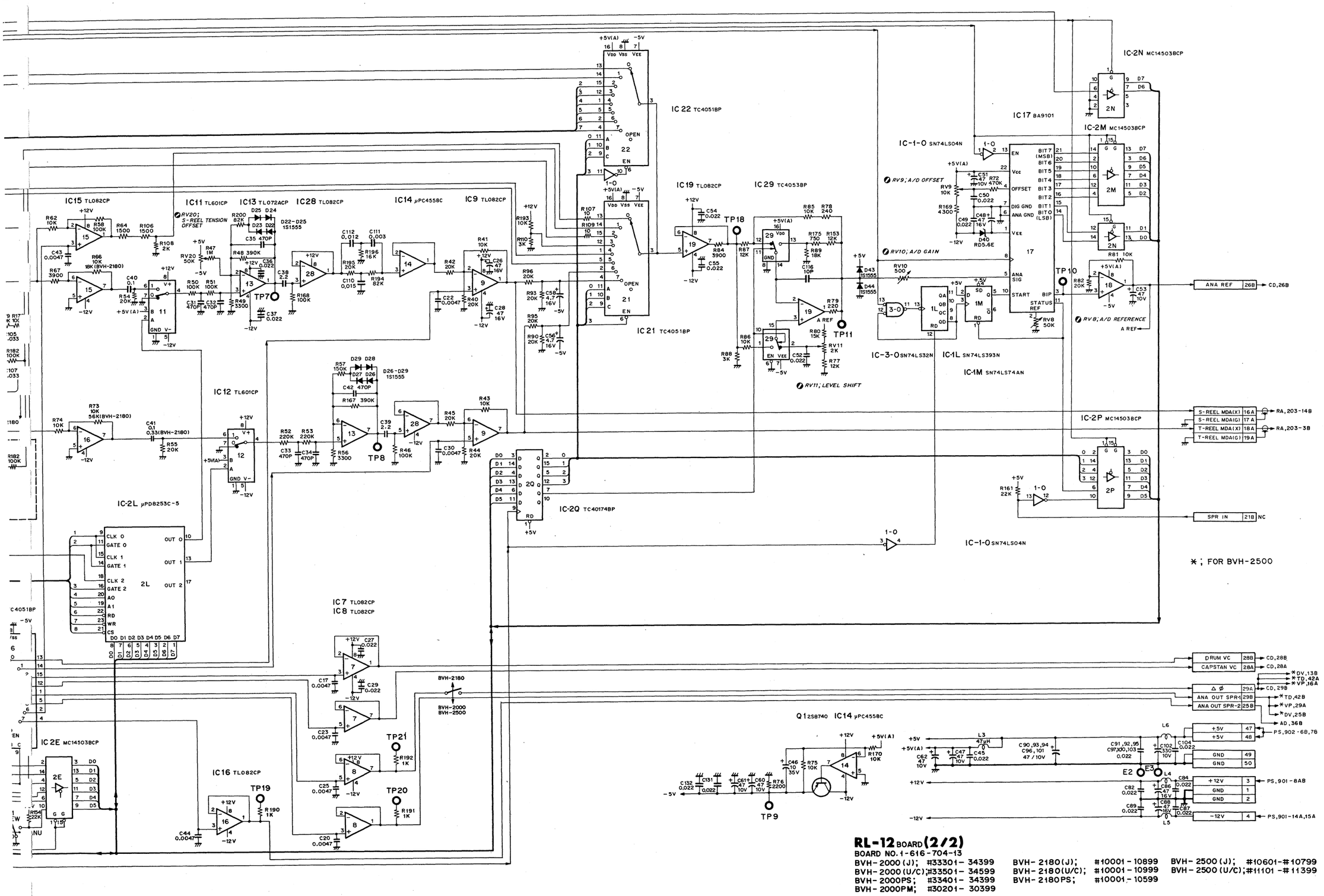

RL-12 BOARD (2/2)

BOARD NO. 1-616-704-13

BVH-2000 (J); #33301 - 34399	BVH-2180 (J); #10001 - 10899	BVH-2500 (J); #10601-#10799
BVH-2000 (U/C); #33501 - 34599	BVH-2180 (U/C); #10001 - 10999	BVH-2500 (U/C); #11101 -#11399
BVH-2000PS; #33401 - 34399	BVH-2180PS; #10001 - 10599	
BVH-2000PM; #30201 - 30399		

RL-12 BOARD (1-606-704-14)

Component Side

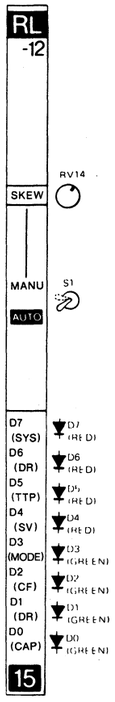

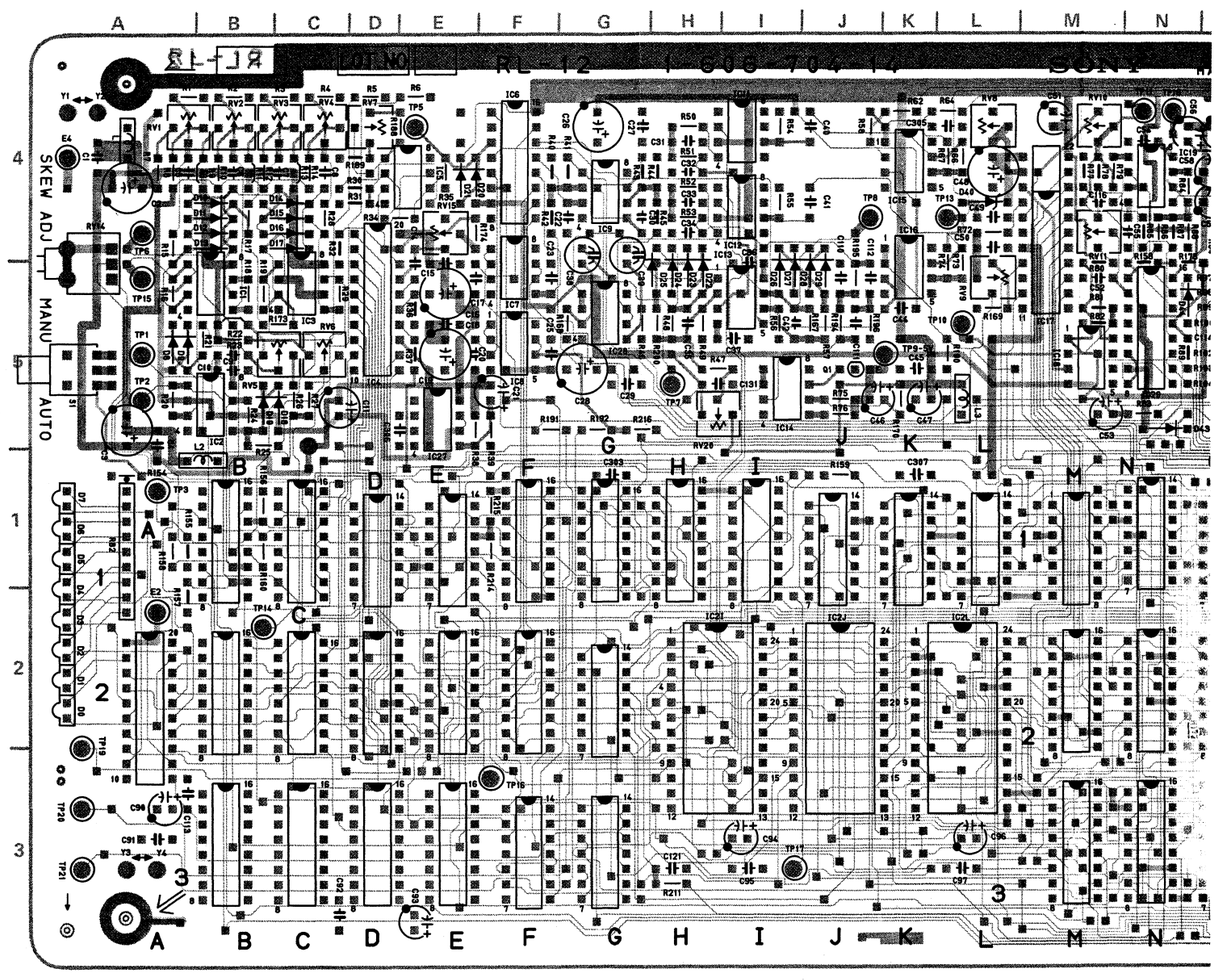

■ 1-606-704-14 COMPONENT SIDE

RB1

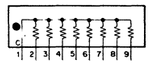

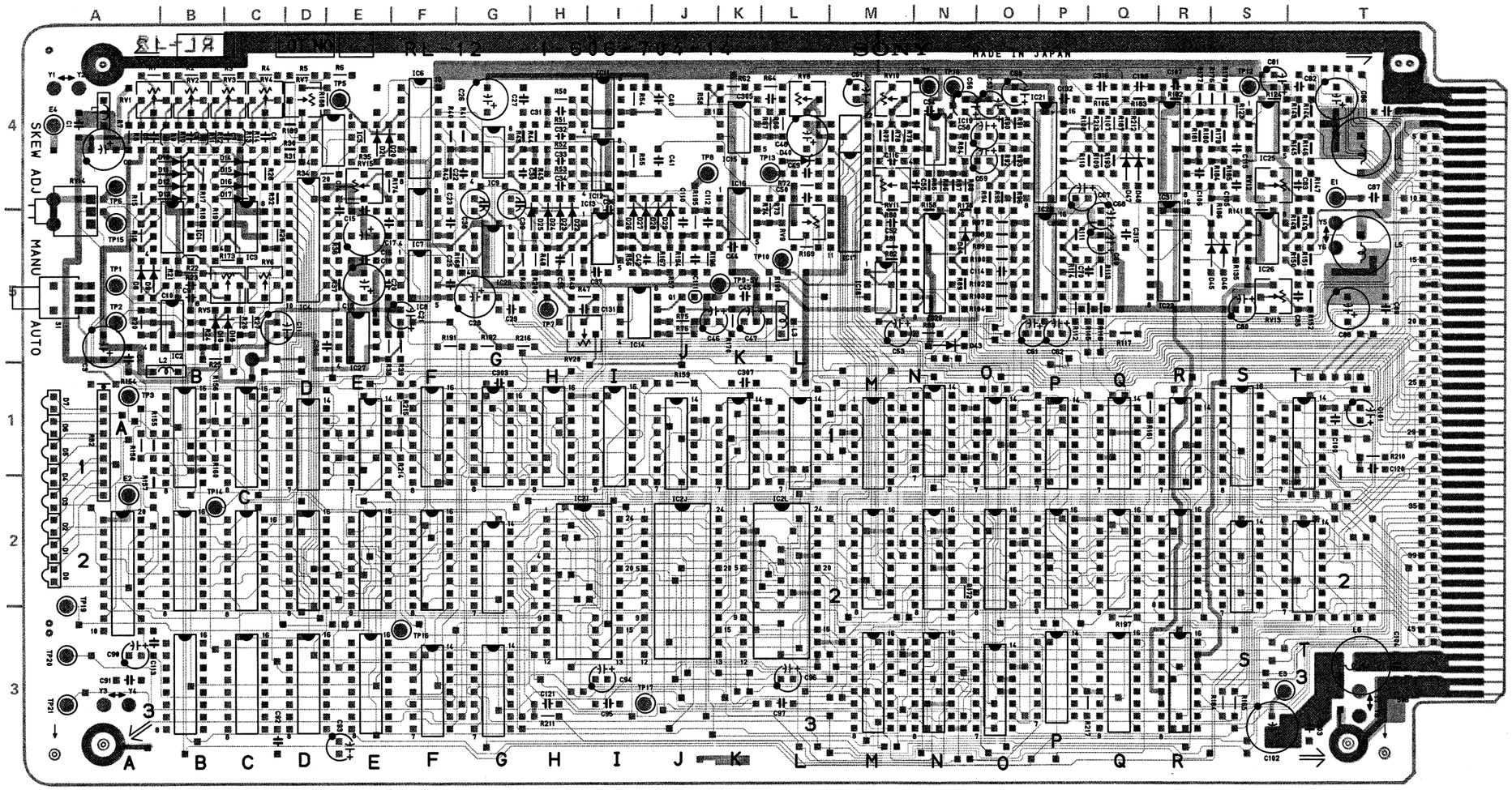

■ 1-606-704-14 COMPONENT SIDE

■ 1-606-704-14 SOLDER SIDE

RB1

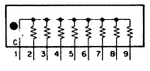

RL-12 (1-606-704-14 & UP)

BVH-2000/PS/PM
BVH-2180/PS/PM

(RS-19 BOARD)
CN301 1M
CN302 3Q
CN303 3R

D0 2A
D1 2A
D2 2A
D3 2A
D4 1A
D5 1A
D6 1A
D7 1A
D8 5A
D9 5A
D10 4B
D11 4B
D12 4B
D13 4B
D14 4C
D15 4C
D16 4C
D17 4C
D18 5C
D19 5B
D20 4E
D21 4E
D22 5H
D23 5H
D24 5H
D25 5H
D26 5I
D27 5I
D28 5J
D29 5J
D40 4I
D43 5N
D44 5N
D45 5S
D46 5S
D47 4Q
D48 4Q
D50 5H
D51 5H

(RS-19 BOARD)
D301 3P
D302 3Q

E1 4T
E2 2A
E3 3T
E4 4A

IC1 5B
IC1B
IC1C
IC1D
IC1E
IC1F
IC1G
IC1H
IC1I
IC1J
IC1K
IC1L
IC1M
IC1N
IC1O
IC1P
IC1Q
IC1R
IC1S
IC1T
IC2 5B
IC2A
IC2C
IC2D
IC2E
IC2F
IC2G
IC2I
IC2J
IC2L
IC2M
IC2N
IC2O
IC2P
IC2Q
IC2R
IC2S
IC2T
IC3 5C
IC3F
IC3G
IC3M
IC3N
IC3O
IC3P
IC4 5D
IC5 4E
IC6 4F
IC7 4F
IC8 5F
IC9 4G
IC11 4I
IC12 4I
IC13 5I
IC14 5I
IC15 4K
IC16 5K
IC17 5M
IC18 5M
IC19 4N
IC21 4P
IC22 5P
IC23 5R
IC25 4S
IC26 5S
IC27 5E
IC28 5G
IC29 5N
IC31 4R

(RS-19 BOARD)
IC301 2M
IC302 2M
IC303 1N
IC304 1N
IC305 2N
IC306 3N
IC307 1P
IC308 2O
IC309 3O
IC310 3P
IC311 1R
IC312 2R
IC313 2S
IC314 1S

Q1 5J

RB2 1A

RV1 4A
RV2 4B
RV3 4C
RV4 4C
RV5 5C
RV6 5C
RV7 4D
RV8 4L
RV9 5L
RV10 4M
RV11 4M
RV12 4S
RV13 5S
RV14 5A
RV15 4E
RV20 5H

S1 5A

TP1 5A
TP2 5A
TP3 1B
TP5 4E
TP6 4A
TP7 5H
TP8 5J
TP9 5K
TP10 5L
TP11 4N
TP12 4S
TP13 4L
TP14 2B
TP15 5A
TP16 3F
TP17 3I
TP18 4N
TP19 2A
TP20 3A
TP21 3A

RL-12 BOARD (1/2)

Reel Servo

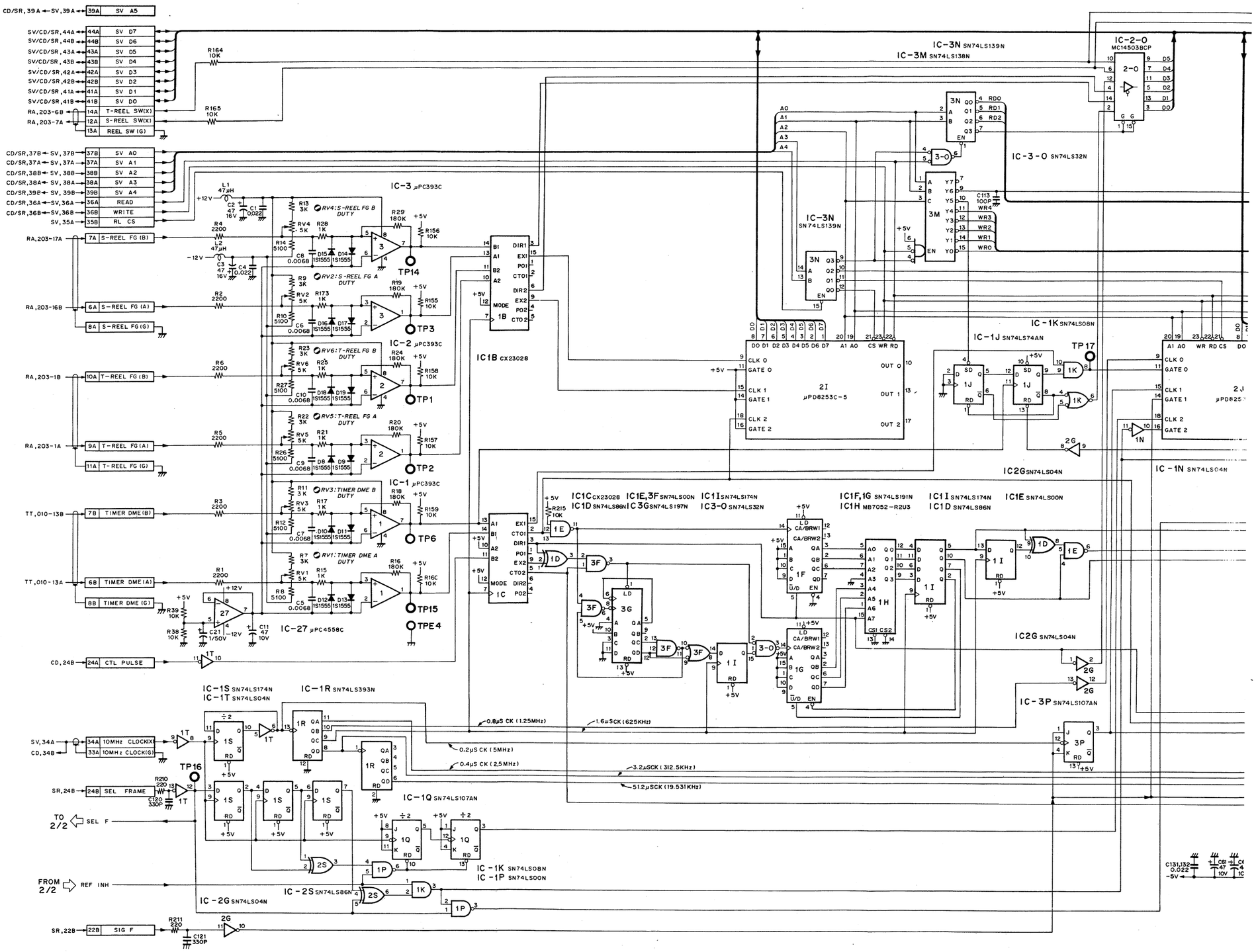

C-77(5/13)

C-77(6/13)

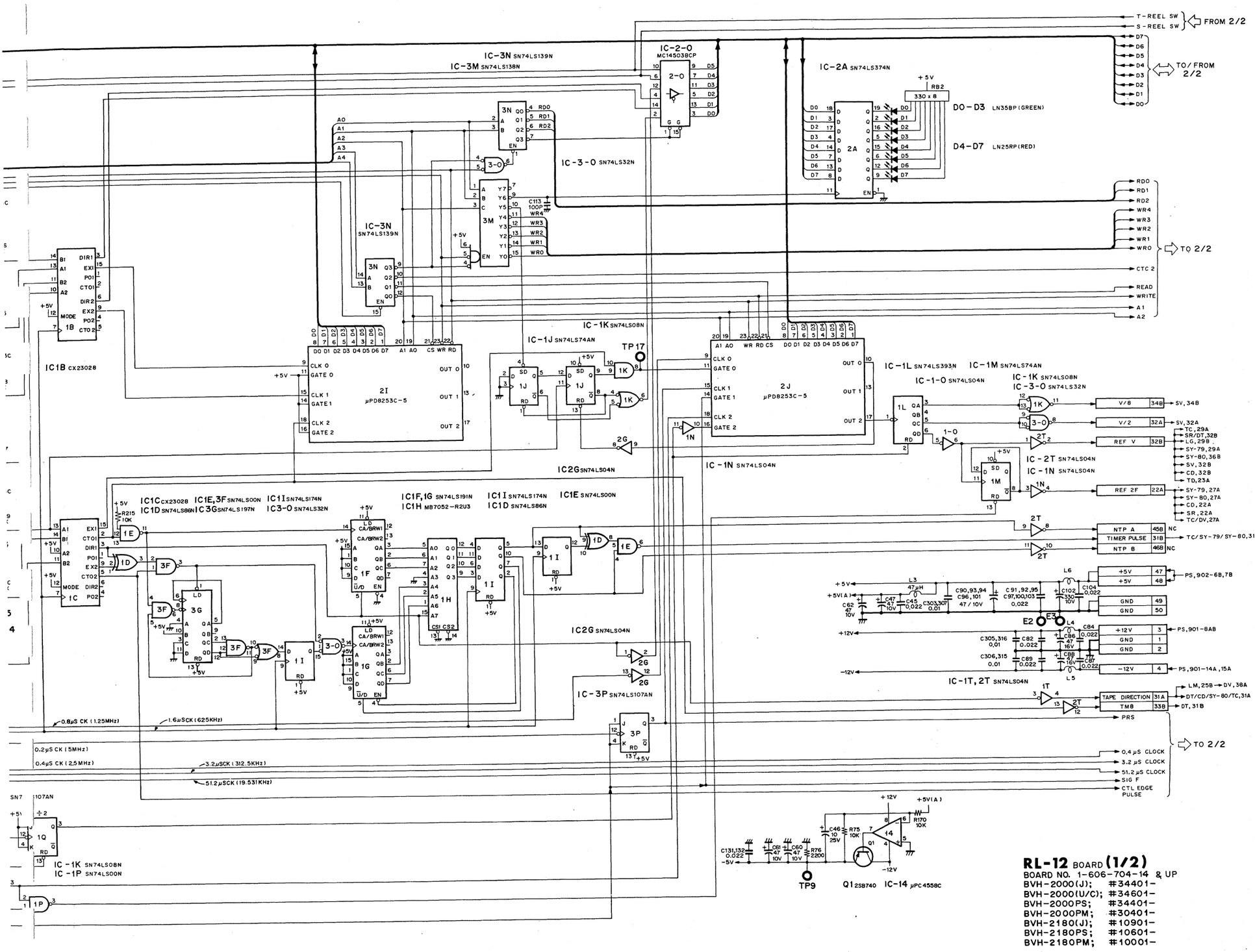

RL-12 BOARD (1/2)
BOARD NO. 1-606-704-14 & UP
BVH-2000(J); #34401-
BVH-2000(U/C); #34601-
BVH-2000PS; #34401-
BVH-2000PM; #30401-
BVH-2180(J); #10901-
BVH-2180PS; #10601-
BVH-2180PM; #10001-

RL-12 BOARD (2/2)

Reel Servo

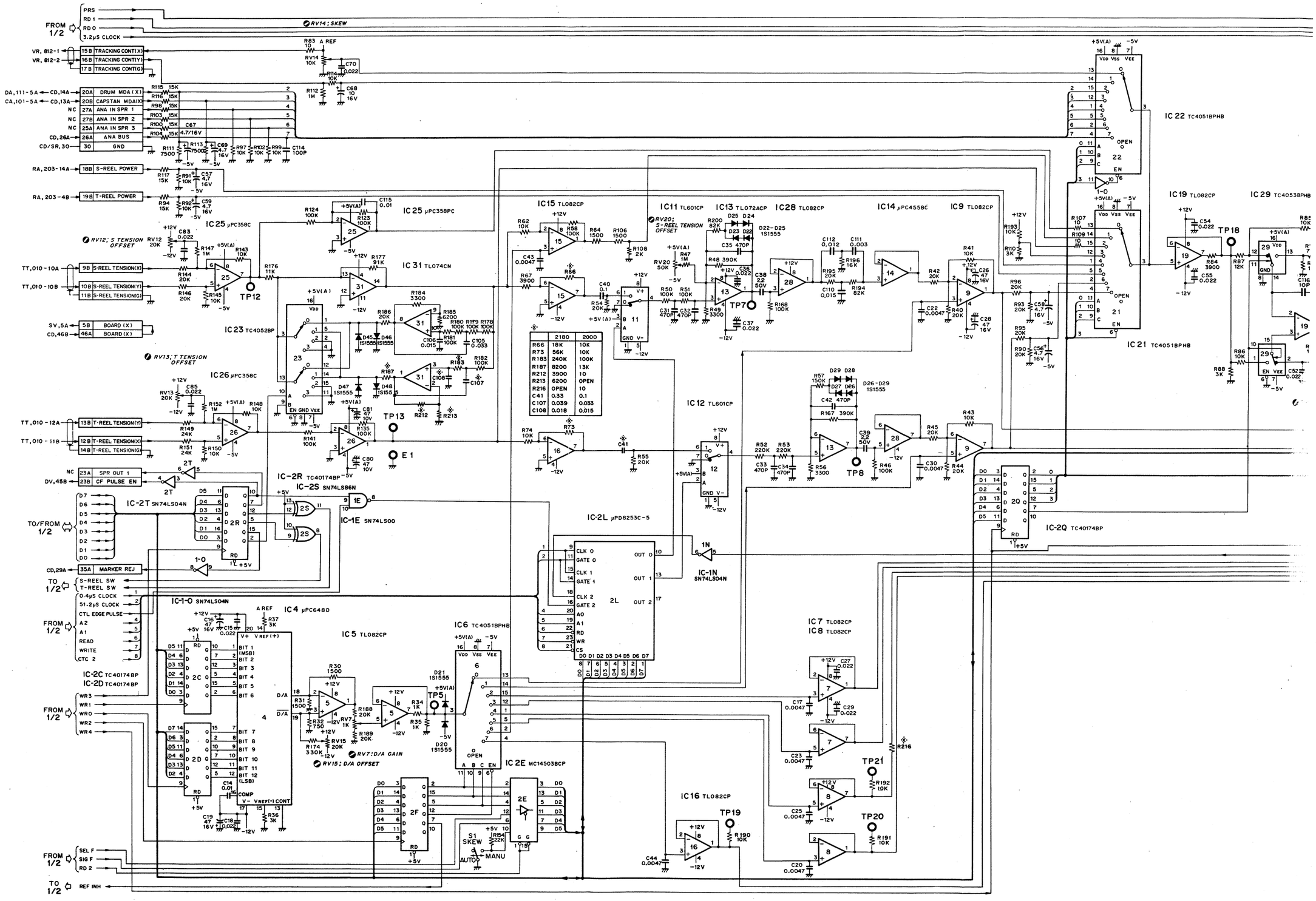

C-77(11/13)

C-77(12/13)

1-606-704-14 & UP CARD RACK RL-12 (2/2)

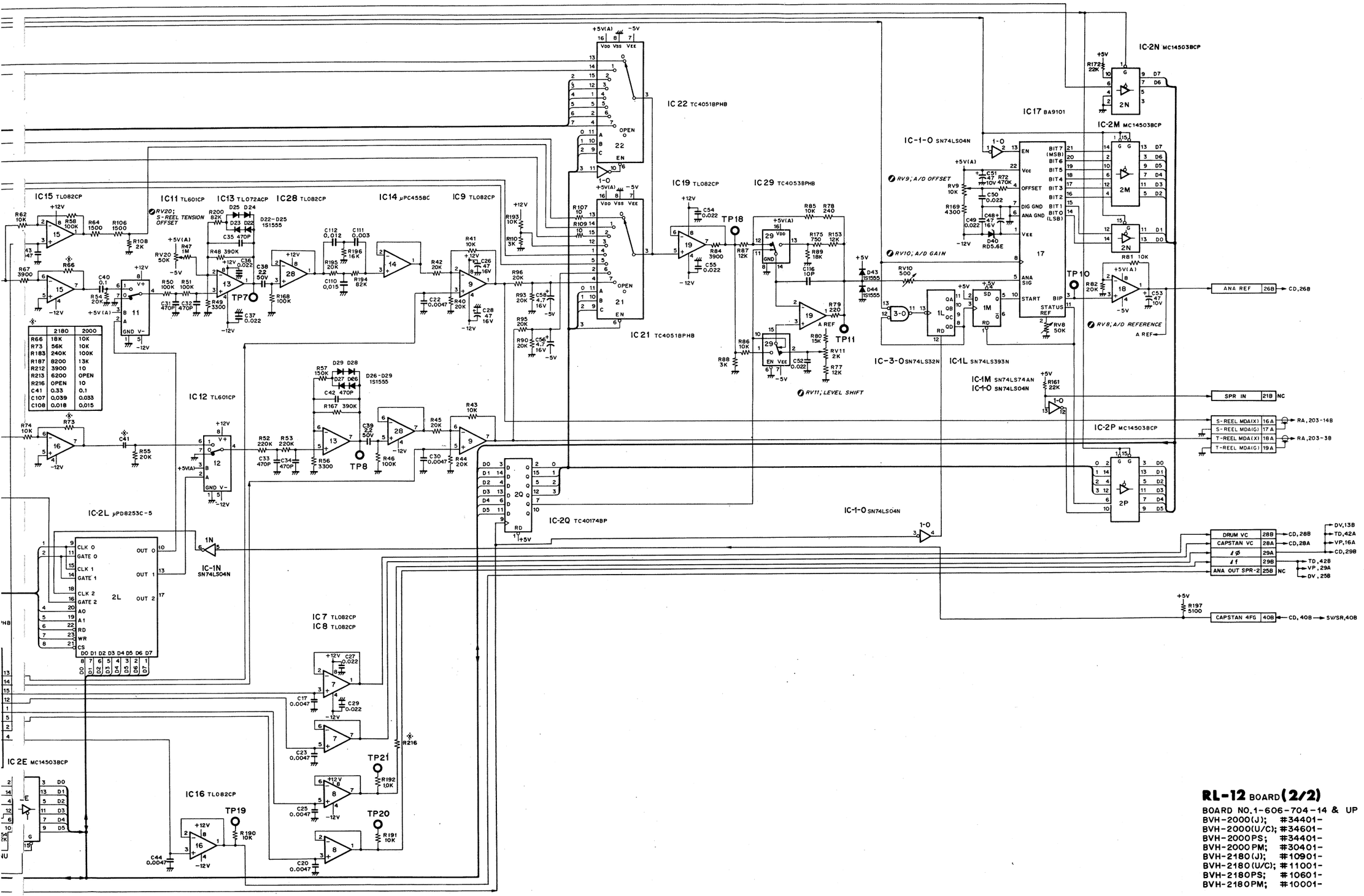

	2180	2000
R66	18K	10K
R73	56K	100K
R183	240K	100K
R187	8200	13K
R212	3900	10
R213	6200	OPEN
R216	OPEN	10
C41	0.33	0.1
C107	0.039	0.033
C108	0.018	0.015

C-77(12/13)

RL-12 BOARD (2/2)

BOARD NO.1-606-704-14 & UP
BVH-2000(J); #34401-
BVH-2000(U/C); #34601-
BVH-2000PS; #34401-
BVH-2000PM; #30401-
BVH-2180(J); #10901-
BVH-2180(U/C); #11001-
BVH-2180PS; #10601-
BVH-2180PM; #10001-

C-77(13/13)

CD-17 BOARD (1-606-705-13) Component Side

BVH-2500 **BVH-2500P** **BVH-2000PS/PM** **BVH-2180PS/PM** **BVH-2000** **BVH-2180**

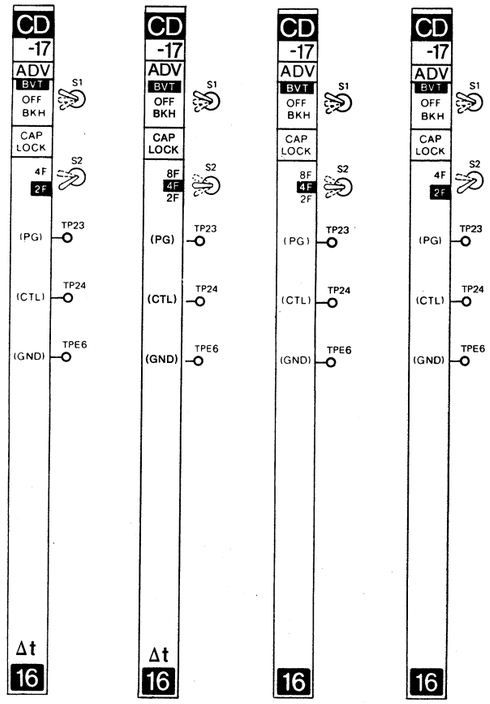

BVH-2000PS
(For 10/12/14 MODEL)

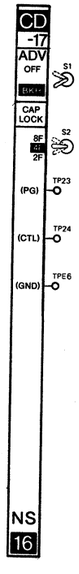

BVH-2000
(For 10/12 MODEL)

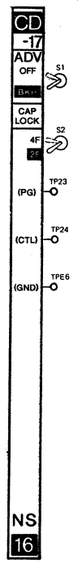

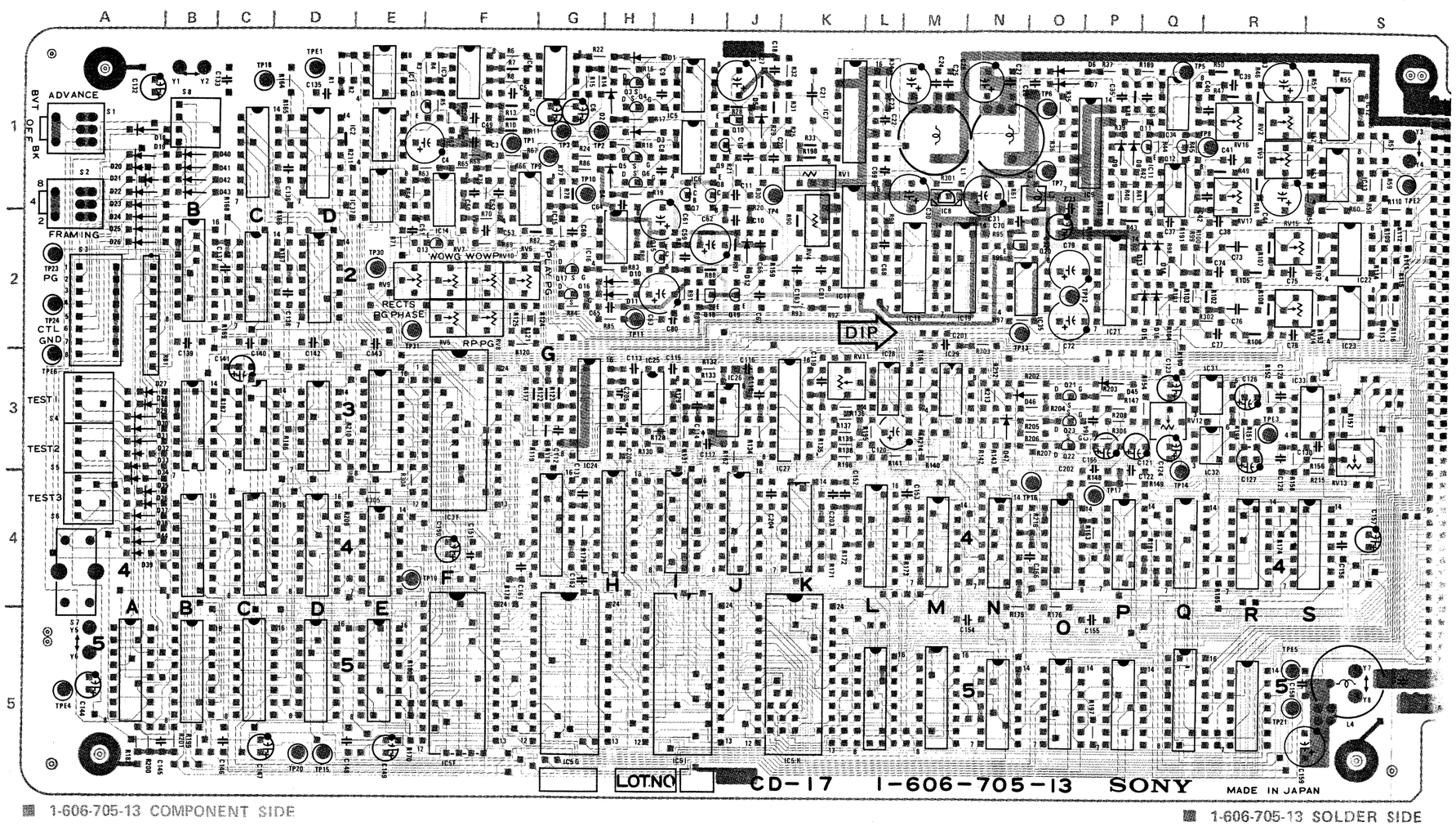

■ 1-606-705-13 COMPONENT SIDE

■ 1-606-705-13 SOLDER SIDE

S4, 5, 6

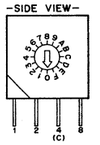

TYPE S-1041

POSITION	PIN NO 8	4	2	1
0	○	○	○	○
1	○	○	○	
2	○	○		○
3	○	○		
4	○		○	○
5	○		○	
6	○			○
7	○			
8		○	○	○
9		○	○	
A		○		○
B		○		
C			○	○
D			○	
E				○
F				

○ = ON

S8

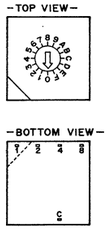

TYPE S-1040

POSITION	PIN NO 8	4	2	1
0	○	○	○	○
1	○	○	○	
2	○	○		○
3	○	○		
4	○		○	○
5	○		○	
6	○			○
7	○			
8		○	○	○
9		○	○	
A		○		○
B		○		
C			○	○
D			○	
E				○
F				

○ = ON

RB1

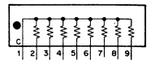

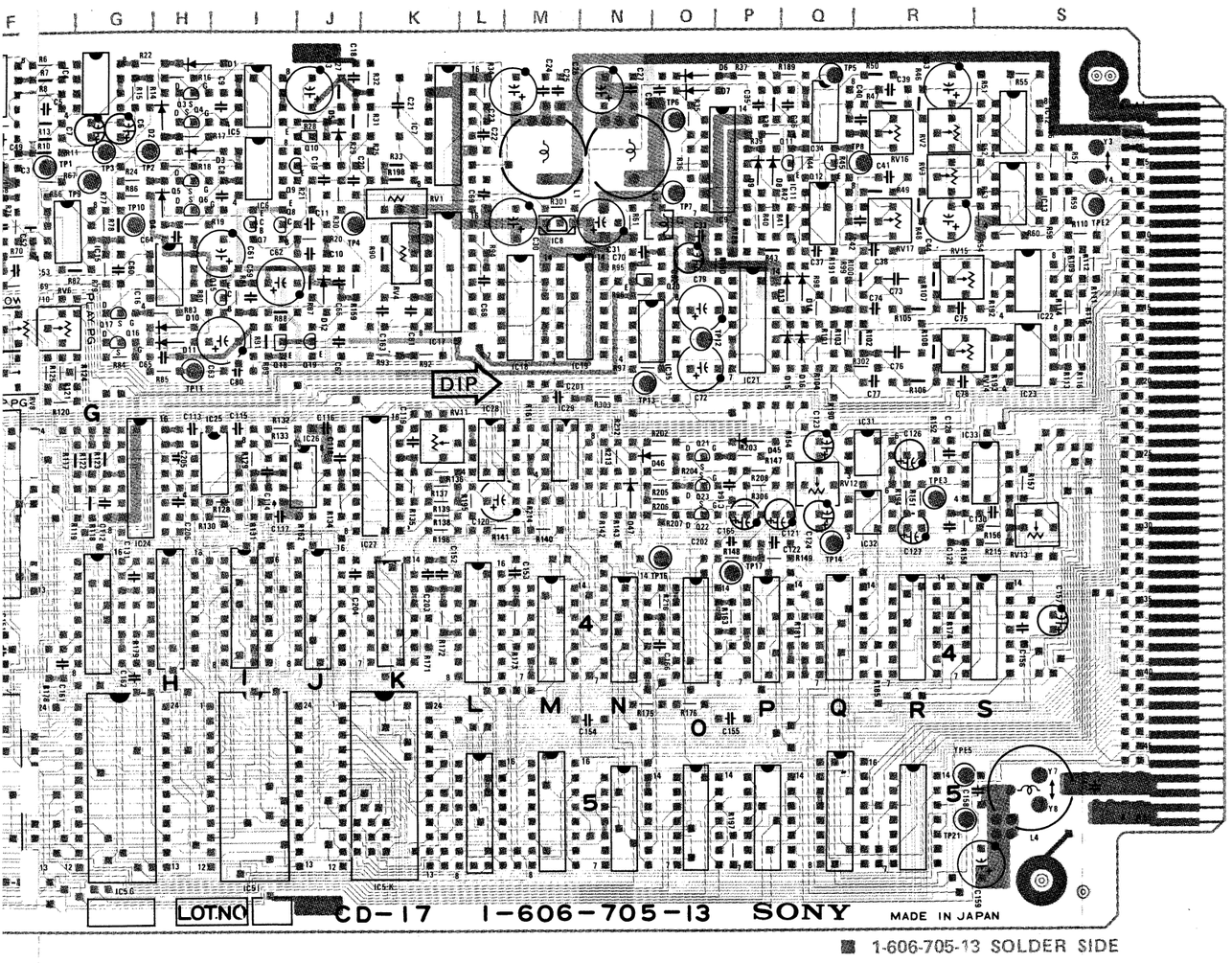

■ 1-606-705-13 SOLDER SIDE

RB1

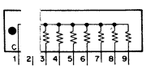

CD-31 BOARD (1-613-995-11)

Solder Side

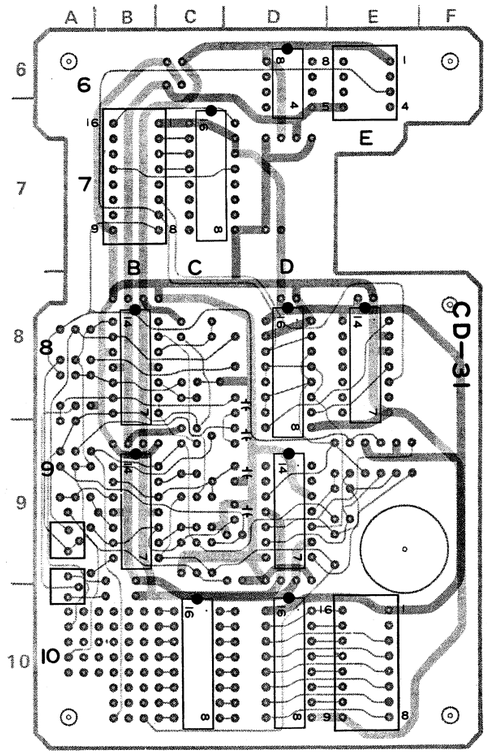

■ 1-613-995-11 COMPONENT SIDE

■ 1-613-995-11 SOLDER SIDE

FOR BVH-2500P

CD-17 (1-606-705-13)

BVH-2000/PS/PM
BVH-2180/PS/PM
BVH-2500/P

(PS/P)		IC5	1I	RV1	1K
CV1	3R	IC5A		RV2	1R
		IC5B		RV3	1R
D1	1H	IC5C		RV4	2K
D2	1H	IC5D		RV5	2F
D3	1H	IC5E		RV6	2F
D4	1H			RV7	2F
D5	1J	(NTSC/PS/PM)		RV8	2F
D6	1O	IC5F		RV9	2E
D7	1O			RV10	2F
D8	1P	IC5G		RV11	3K
D9	1P	IC5I		RV12	3Q
D10	2H	IC5K		RV13	3S
D11	2H	IC5L		RV14	2R
D12	2J	IC5M		RV15	2R
D13	2O	IC5N		RV16	1R
D14	2O	IC5O		RV17	1R
D15	2O	IC5P			
D16	2O	IC5Q		(CD-31 BOARD)	
D18	1A	IC5R		RV401	9A
D19	1A	IC6	1I	RV402	9A
D20	1A	IC7	1K		
D21	1A			S1	1A
D22	1A	(CD-31 BOARD)		S2	1A
D23	1A	IC7C		S3	2A
D24	2A			S4	3A
D25	2A	IC8	1M	S5	3A
D26	2A			S6	4A
D27	3A	(CD-31 BOARD)		S7	4A
D28	3A	IC8B		S8	1B
D29	3A	IC8D			
D30	3A	IC8E		TP1	1F
D31	3A			TP2	1G
D32	3A	IC9	1P	TP3	1G
D33	3A			TP4	1J
D34	4A	(CD-31 BOARD)		TP5	1Q
D35	4A	IC9B		TP6	1O
D36	4A	IC9D		TP7	1O
D37	4A	IC10D		TP8	1R
D38	4A			TP9	1G
D39	4A	IC11	1Q	TP10	1G
D40	1B	IC12	1S	TP11	2H
D41	1B	IC13	1S	TP12	2O
D42	1B	IC14	1F	TP13	2N
D43	1B	IC15	1F	TP14	3Q
		IC16	2H	TP15	5D
(PS-P)		IC17	2K	TP16	4O
D44	4A	IC18	2M	TP17	4P
D45	3P	IC19	2N	TP18	1C
D46	3N	IC21	2P	TP19	4E
		IC22	2S	TP20	5D
D47	3N	IC23	2S	TP21	5R
		IC24	3Q	TP23	2A
(CD-31 BOARD)		IC25	3H	TP24	2A
D401	9A	IC26	3J	TP30	2E
D402	9C			TP31	2E
D403	9D	(PS/P)			
D404	9D	IC27	3K	(CD-31 BOARD)	
				TP401	10A
IC1	1E	IC28	3L	TP402	10A
IC1C		IC29	3M	TP403	10B
IC1D		IC31	3R	TP404	10B
IC2	1E	IC32	3R		
		IC33	3S	TPE1	1D
(NTSC/PS/PM)		IC34	1Q	TPE2	1S
IC2B		IC35	2O	TPE3	3R
		IC37	1E	TPE4	5A
IC2C				TPE5	5R
IC2D		Q1	1E	TPE6	3A
IC3	1F	Q3	1H		
IC3B		Q4	1H		
IC3C		Q5	1H		
IC3D		Q6	1H		
IC3E		Q7	1I		
IC3F		Q8	1I		
IC4	1G	Q9	1I		
IC4B		Q10	1J		
IC4C		Q11	1Q		
IC4D		Q12	1Q		
IC4E		Q13	2F		
IC4G		Q15	2I		
IC4H		Q16	2G		
IC4I		Q17	2G		
IC4J		Q18	2I		
IC4K		Q19	2J		
IC4L		Q20	2N		
IC4M		Q21	3O		
IC4N		Q22	3O		
IC4O					
IC4P		(PS/P)			
IC4Q		Q23	3O		
IC4R					
IC4S		RB1	2A		

CD-17 BOARD (1/2)

Capstan/Drum Servo

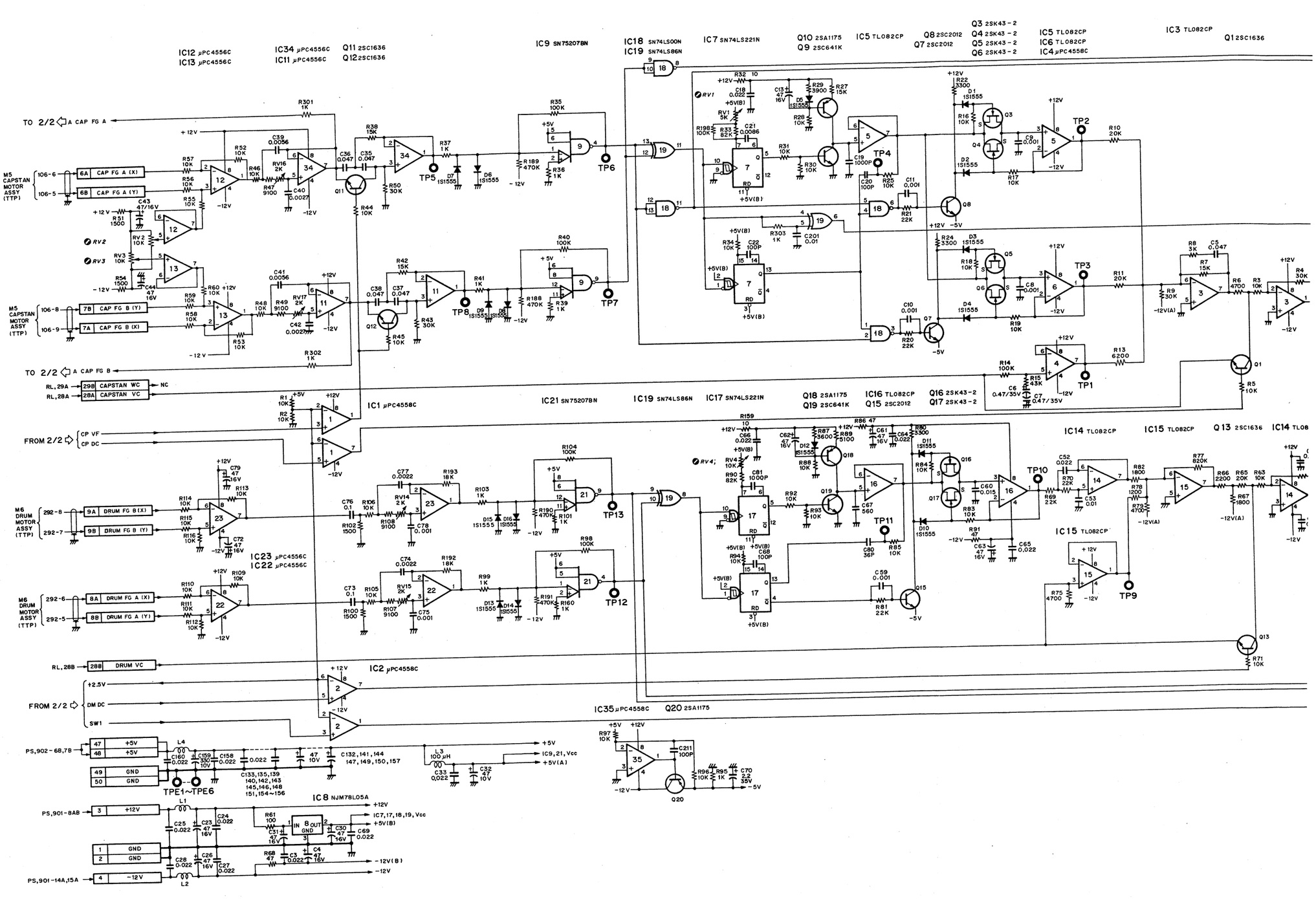

BVH-2180/PS/PM
BVH-2000/PS/PM
C-81
C-82
C-113
C-112
C-111
BVH-2500/P

2500(J); #10001 – 10799 2500(U/C); #10001 – 11399 1-606-705-13 CARD RACK CD-17 (1/2)

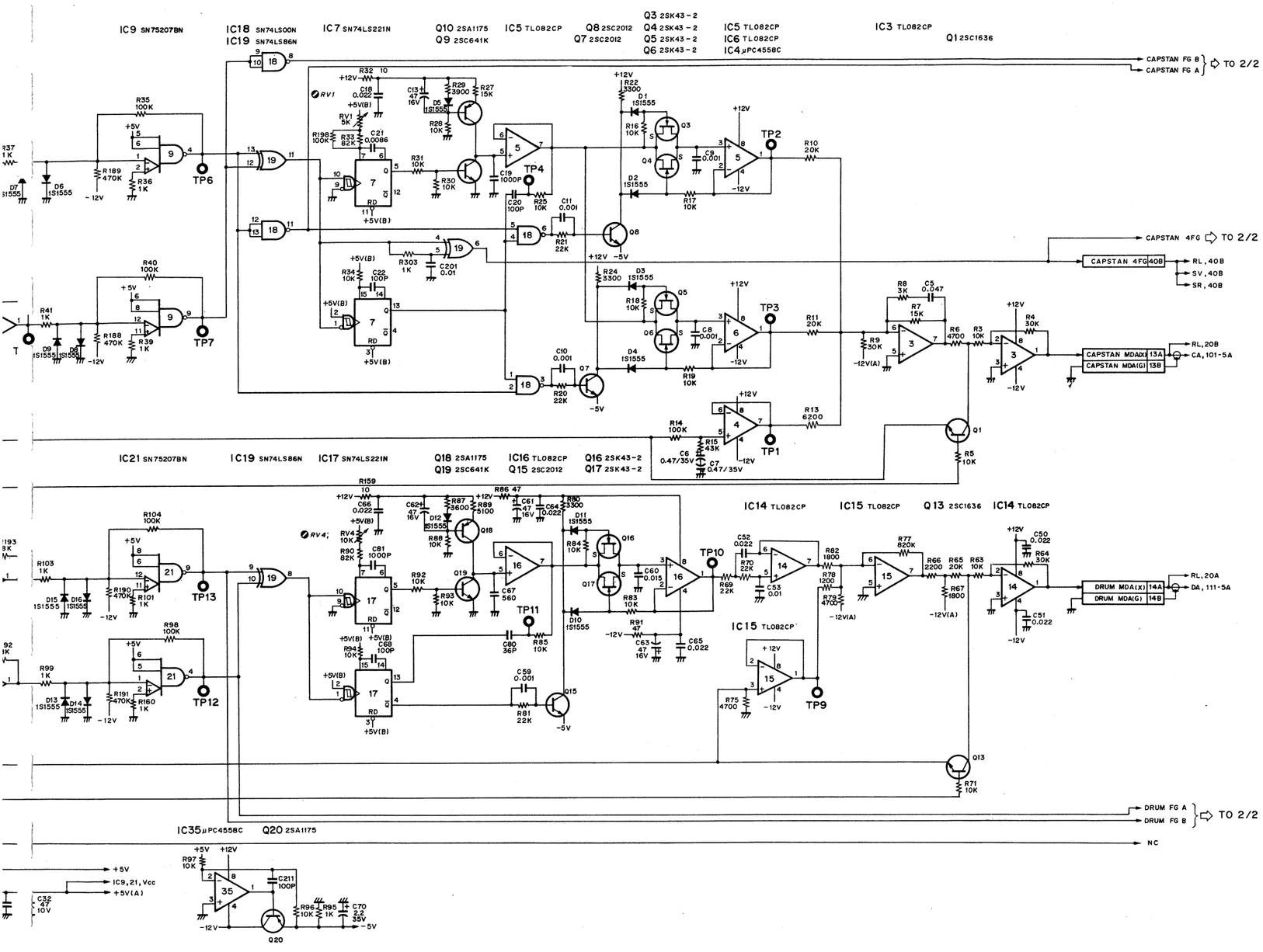

CD-17 (1/2)

BOARD NO. 1-606-705-13
BVH-2000PS; #11901-34399
BVH-2180PS; #10001-10599

CD-17 BOARD (2/2)

Capstan/Drum Servo

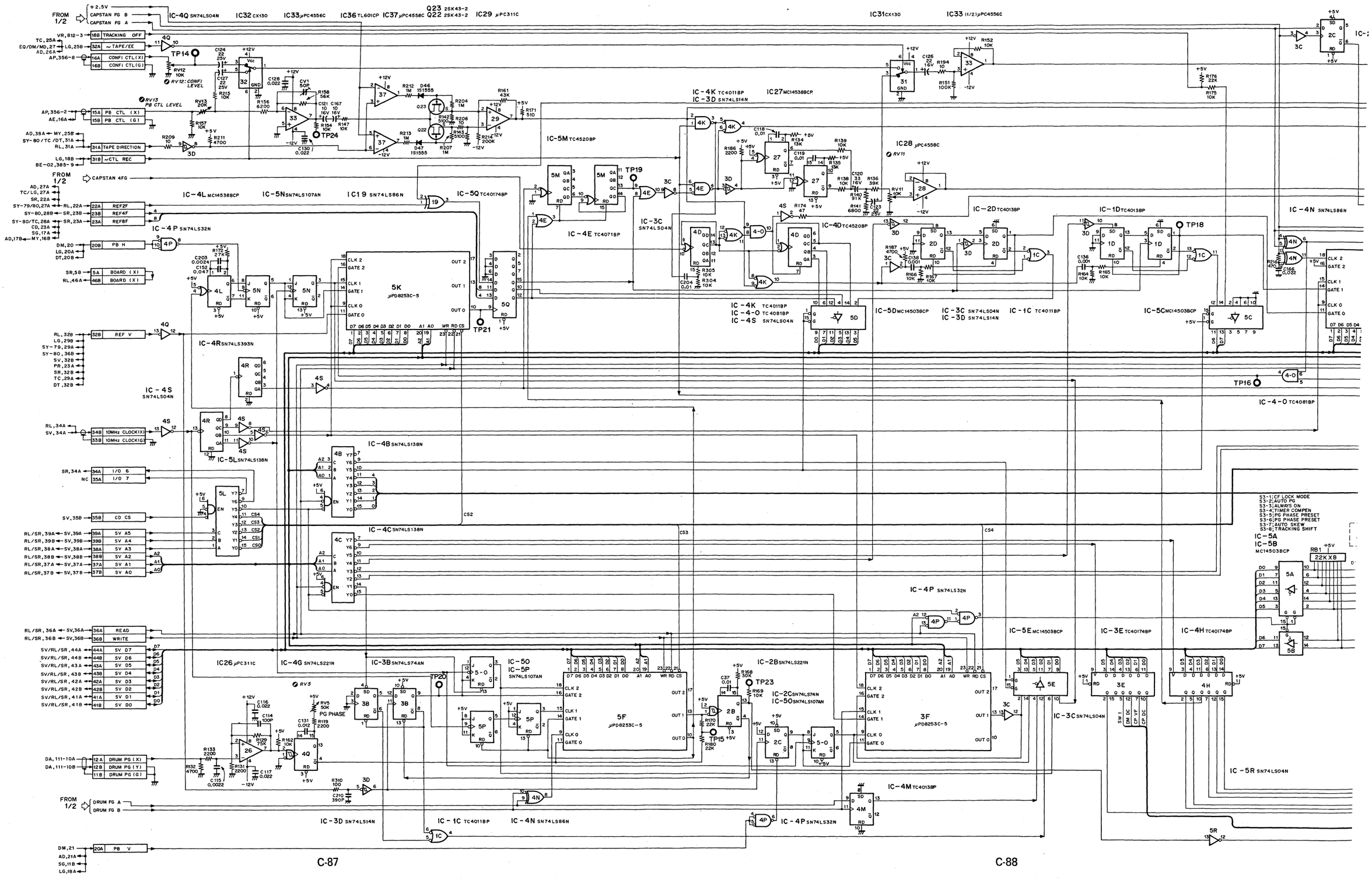

2500(J); #10001 – 10799 2500(U/C); #10001 – 11399 1-606-705-13 CARD RACK CD-17 (2/2)

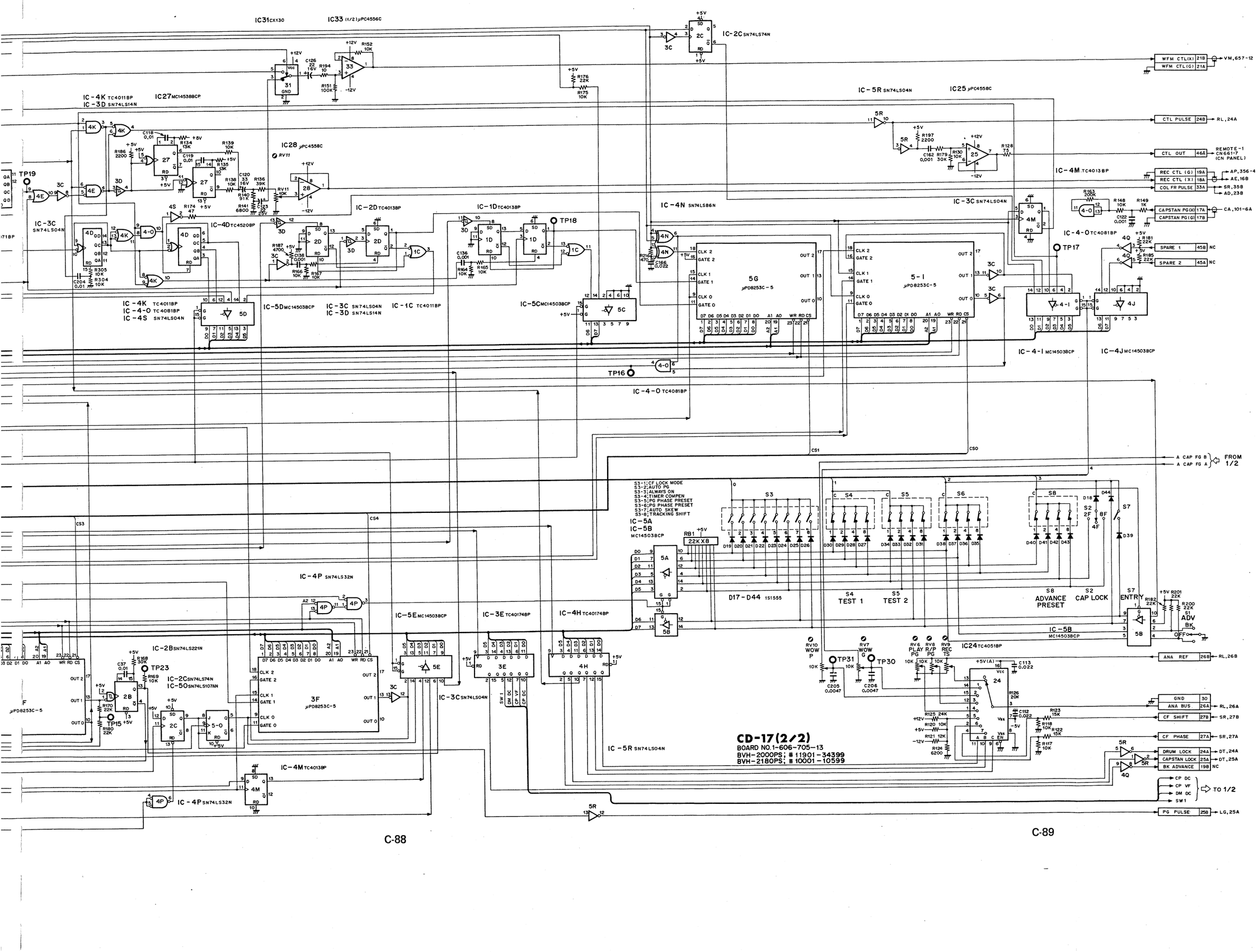

CD-17 BOARD (2/2)

Capstan/Drum Servo

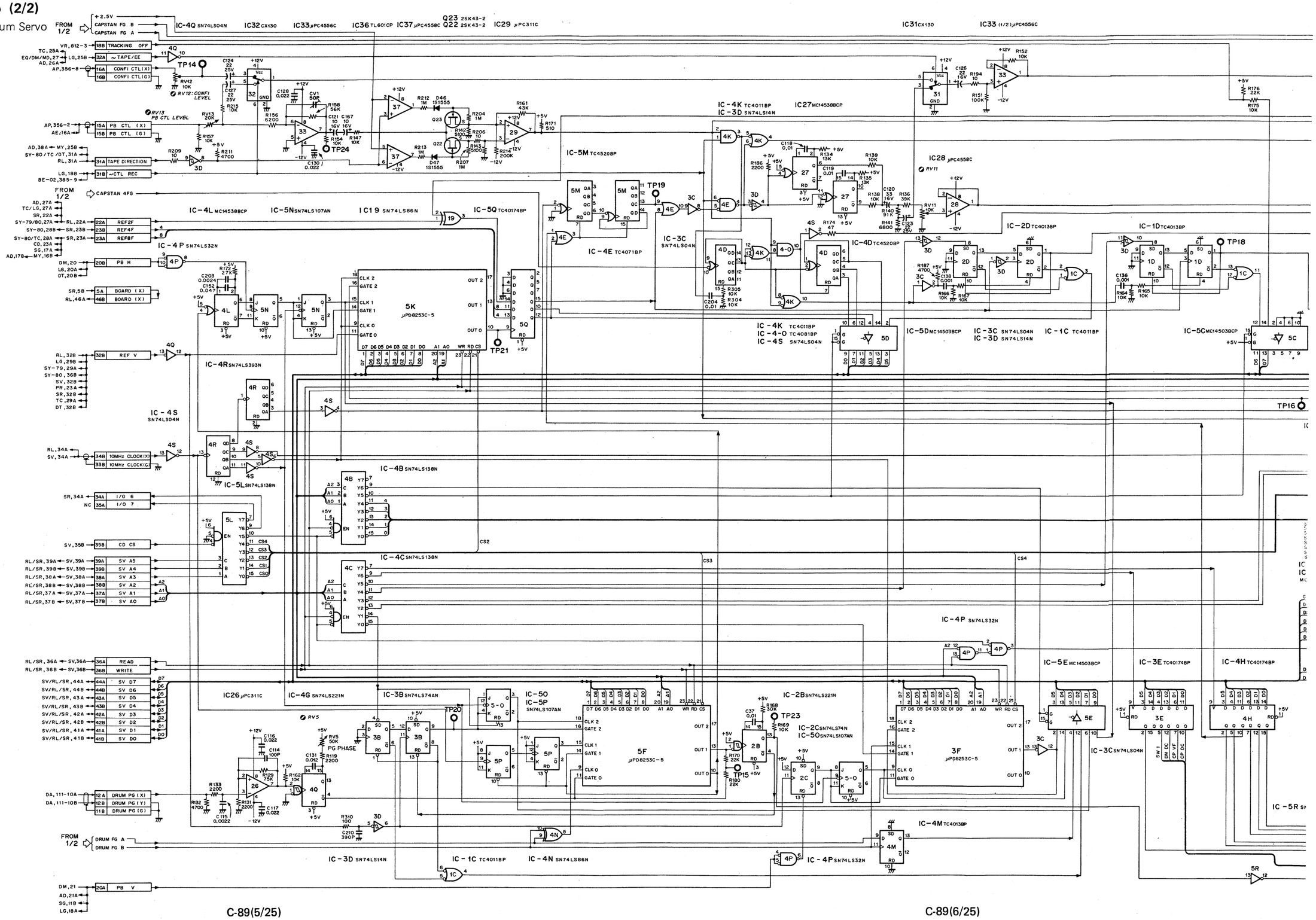

C-89(5/25)

C-89(6/25)

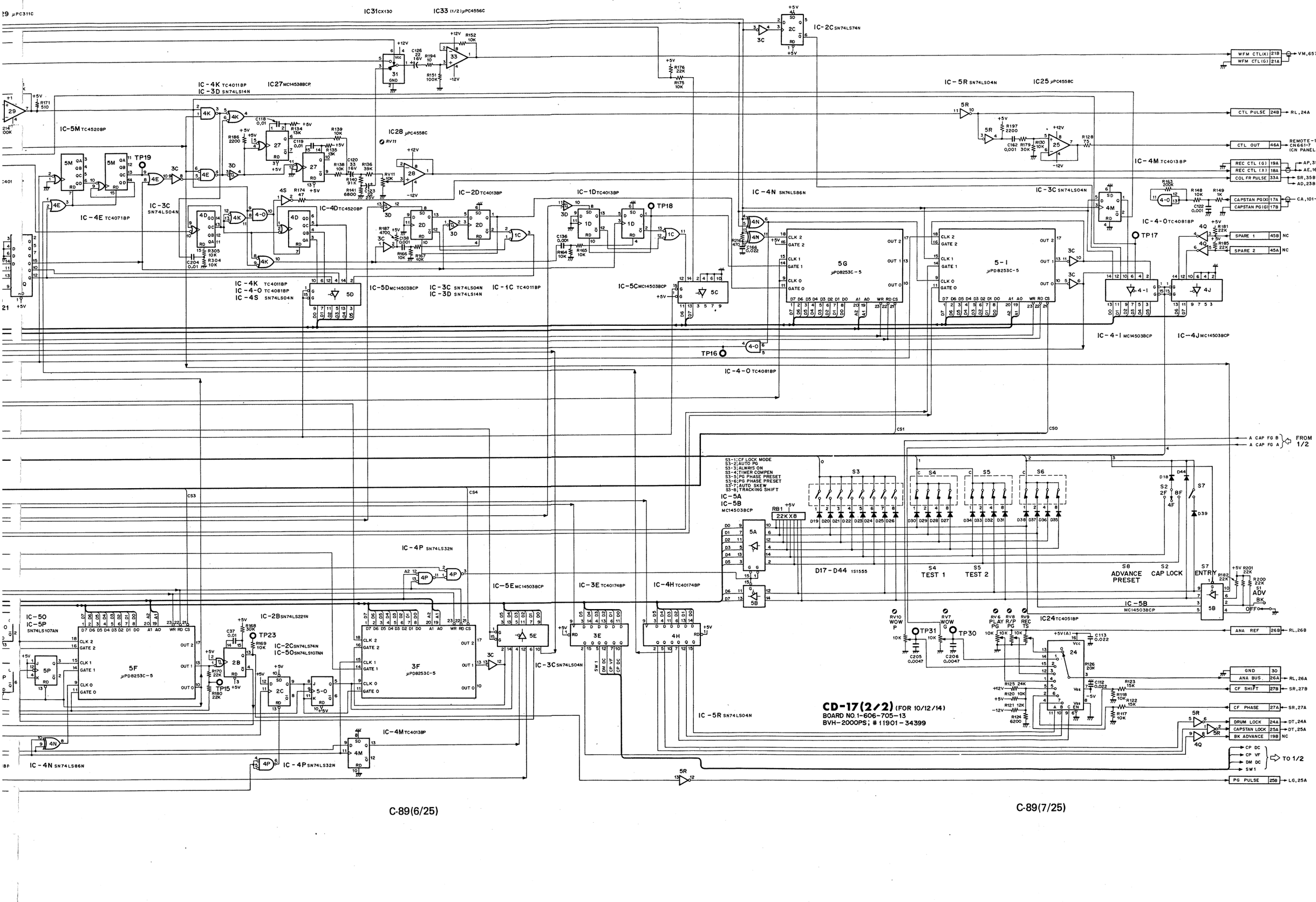

C-89(6/25)

C-89(7/25)

CD-17 BOARD (1-606-705-14) Component Side

BVH-2500

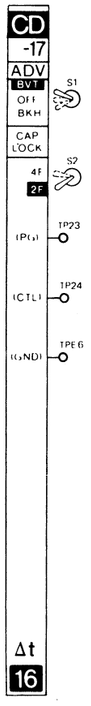

BVH-2500P

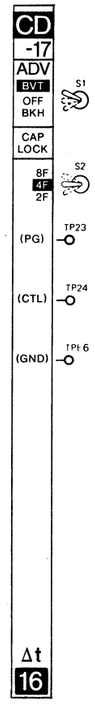

BVH-2000PS/PM
BVH-2180PS/PM

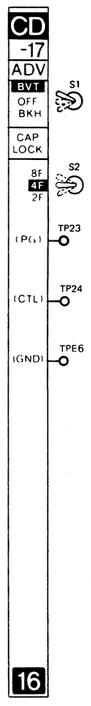

BVH-2000
BVH-2180

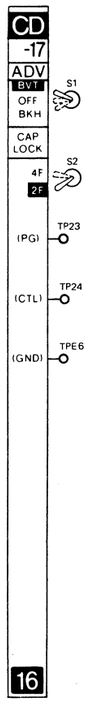

BVH-2000PS
(For 10/12/14 MODEL)

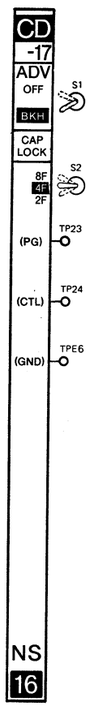

BVH-2000
(For 10/12 MODEL)

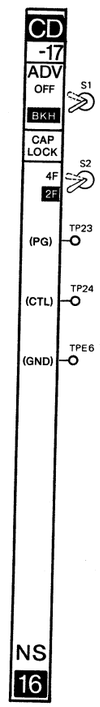

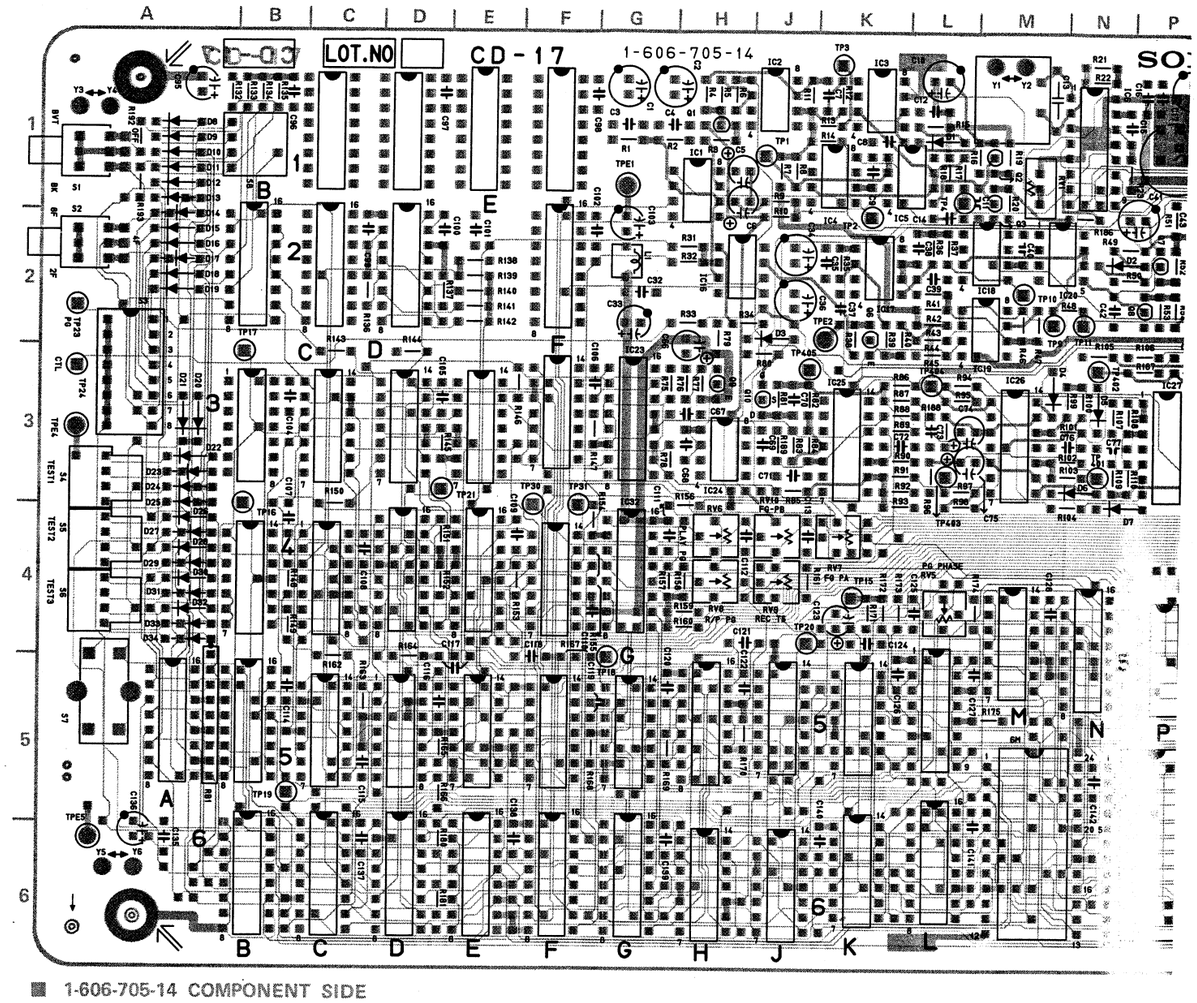

■ 1-606-705-14 COMPONENT SIDE

S4, 5, 6

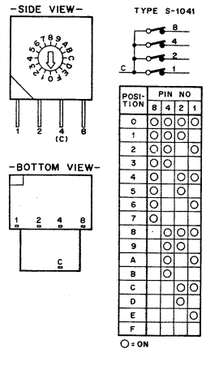

S8

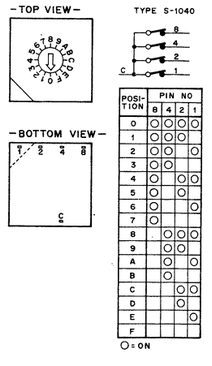

RB1

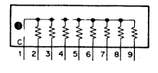

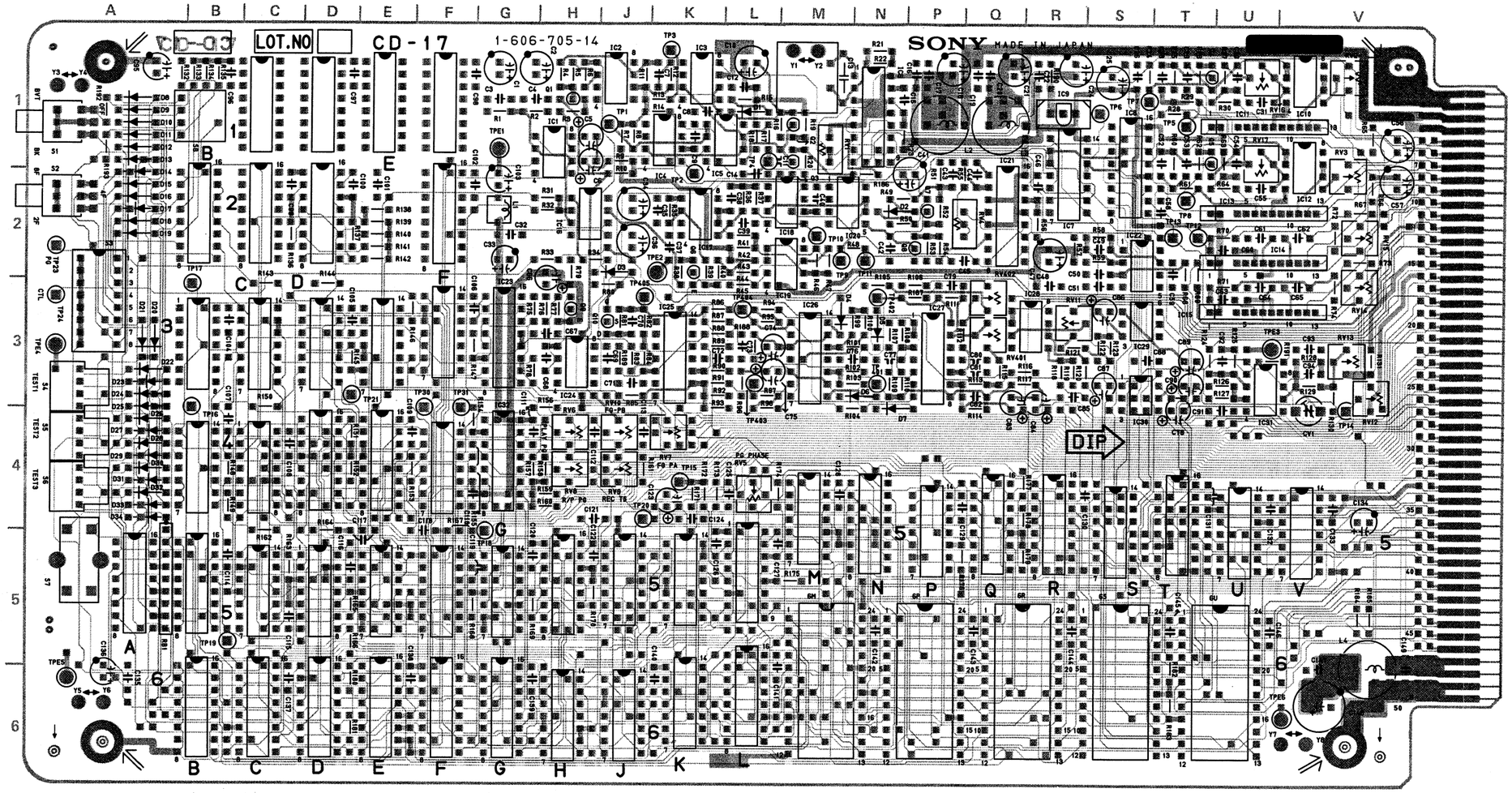

■ 1-606-705-14 COMPONENT SIDE

■ 1-606-705-14 SOLDER SIDE

S4, 5, 6

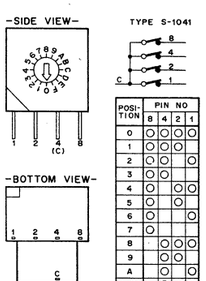

POSITION	PIN NO 8	4	2	1
0	○	○	○	○
1	○	○	○	
2	○	○		○
3	○	○		
4	○		○	○
5	○		○	
6	○			○
7	○			
8		○	○	○
9		○	○	
A		○		○
B		○		
C			○	○
D			○	
E				○
F				

○=ON

S8

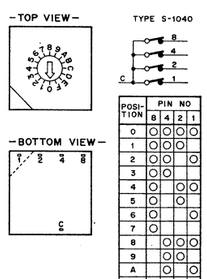

POSITION	PIN NO 8	4	2	1
0	○	○	○	○
1	○	○	○	
2	○	○		○
3	○	○		
4	○		○	○
5	○		○	
6	○			○
7	○			
8		○	○	○
9		○	○	
A		○		○
B		○		
C			○	○
D			○	
E				○
F				

○=ON

RB1

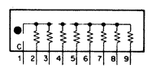

C-89(9/25)

C-89(10/25)

CD-17 (1-606-705-14 & UP)

BVH-2000/PS/PM
BVH-2180/PS/PM
BVH-2500/P

(PS/P)		IC5	1L	RV1	1M
CV1	3V	IC5A		RV2	1V
		IC5B		RV3	1V
D1	1L	IC5C		RV4	3P
D2	2N	IC5D		RV5	4L
D3	2J	IC5E		RV6	4H
		IC5F		RV7	4K
(PS/P)		IC5G		RV8	4H
D4	3M	IC5H		RV9	4J
D5	3N	IC5J		RV10	4J
D6	3N	IC5I		RV11	3R
D7	3N	IC5K		RV12	2V
		IC5L		RV13	2V
D8	1A	IC5M		RV14	2V
D9	1A	IC5N		RV15	2V
D10	1A	IC5P		RV16	1U
D11	1A	IC5Q		RV17	1U
D12	1A	IC5R			
D13	1A	IC5S		(PS/P)	
D14	1A	IC5T		RV401	3R
D15	2A	IC5U		RV402	2Q
D16	2A	IC5V			
D17	2A	IC6	1N	S1	1A
D18	2A	IC6B		S2	2A
D19	2A	IC6C		S3	2A
		IC6D		S4	3A
(PS/P)		IC6E		S5	4A
D20	3A	IC6F		S6	4A
D21	3A	IC6G		S7	5A
D22	3A	IC6H		S8	1B
D23	3A	IC6J			
D24	3A	IC6K		TP1	1J
D25	3A	IC6L		TP2	1K
D26	4A	IC6M		TP3	1K
D27	4A	IC6P		TP4	1L
D28	4A	IC6R		TP5	1T
D29	4A	IC6S		TP6	1S
D30	4A	IC6U		TP7	1S
D31	4A	IC7	2R	TP8	1S
D32	4A	IC8	1S	TP9	2M
D33	4A	IC9	1R	TP10	2M
D34	4A	IC10	1V	TP11	2N
		IC11	1U	TP12	2T
IC1	1H	IC12	2V	TP13	2T
IC2	1E	IC13	2U	TP14	3V
IC2B		IC14	2V	TP15	4K
		IC15	3U	TP16	4B
(PS/P)		IC16	2H	TP17	2B
IC2D		IC17	2K	TP18	5Q
		IC18	2M	TP19	5B
IC3	1K	IC19	2N	TP20	4J
IC3C		IC20	2L	TP21	3E
IC3D		IC21	2Q	TP23	2A
IC3E		IC22	2S	TP24	3A
				TP30	3F
(PS/P)		(PS/P)		TP31	3F
IC3F		IC23	3G	TP401	3F
IC4	1K	IC24	3H	(PS/P)	
IC4B		IC25	3K	TP402	3N
IC4C				TP403	3L
IC4D		(PS/P)		TP404	3L
IC4E		IC26	3M	TP405	3J
IC4F		IC27	3P		
		IC28	3R	TPE1	1G
		IC29	3S	TPE2	2J
		IC30	3S	TPE3	3U
		IC31	3U	TPE4	3A
		IC32	3G	TPE5	6A
				TPE6	6V
		Q1	1A		
		Q2	1M		
		Q3	2M		
		Q4	1T		
		Q5	1T		
		Q6	2K		
		Q7	2P		
		Q8	2N		
		Q9	3H		
		Q10	3J		
		RB1	5A		

BVH-2000/PS/PM C-89(8/25) C-89(9/25) C-89(10/25)

BVH-2500 C-119(14/25) C-119(15/25) C-119(1) C-119(4/13)

BVH-2500P C-119(2/13) C-119(3/13)

CD-17 BOARD (1/2)

Capstan/Drum Servo

BVH-2500P C-119(5/13) C-119(6/13) C-119(7/13)
BVH-2500 C-119(17/25) C-119(18/25)
BVH- /PS/PM C-89(11/25) C-89(12/25) C-89(13/25)

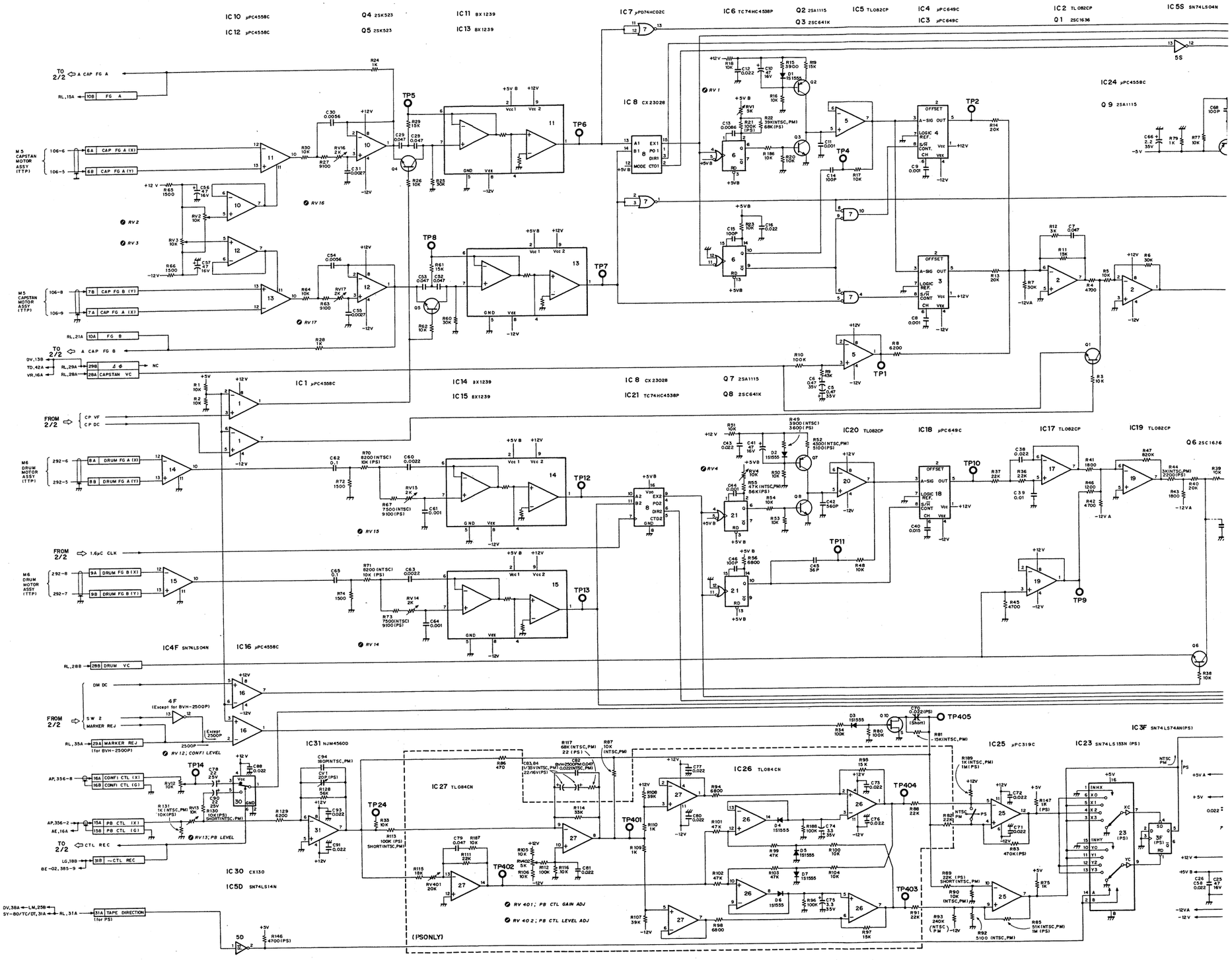

C-89(11/25)

C-89(12/25)

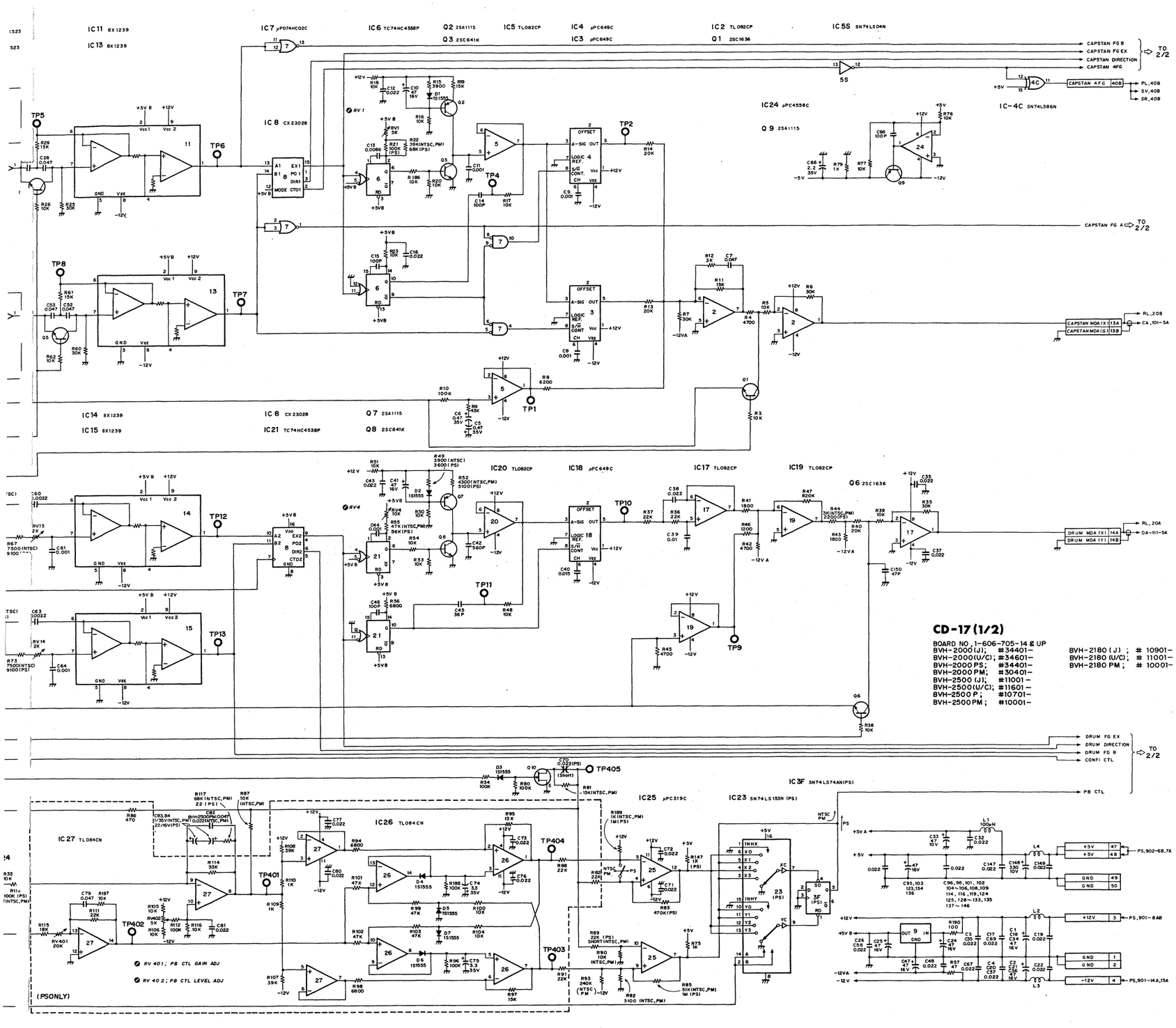

CD-17 (1/2)

BOARD NO. 1-606-705-14 & UP

BVH-2000 (J);	#34401-	BVH-2180 (J);	#10901-
BVH-2000 (U/C);	#34601-	BVH-2180 (U/C);	#11001-
BVH-2000 PS;	#34401-	BVH-2180 PM;	#10001-
BVH-2000 PM;	#30401-		
BVH-2500 (J);	#11001-		
BVH-2500 (U/C);	#11601-		
BVH-2500 P;	#10701-		
BVH-2500 PM;	#10001-		

CD-17 BOARD (2/2)

Capstan/Drum Servo

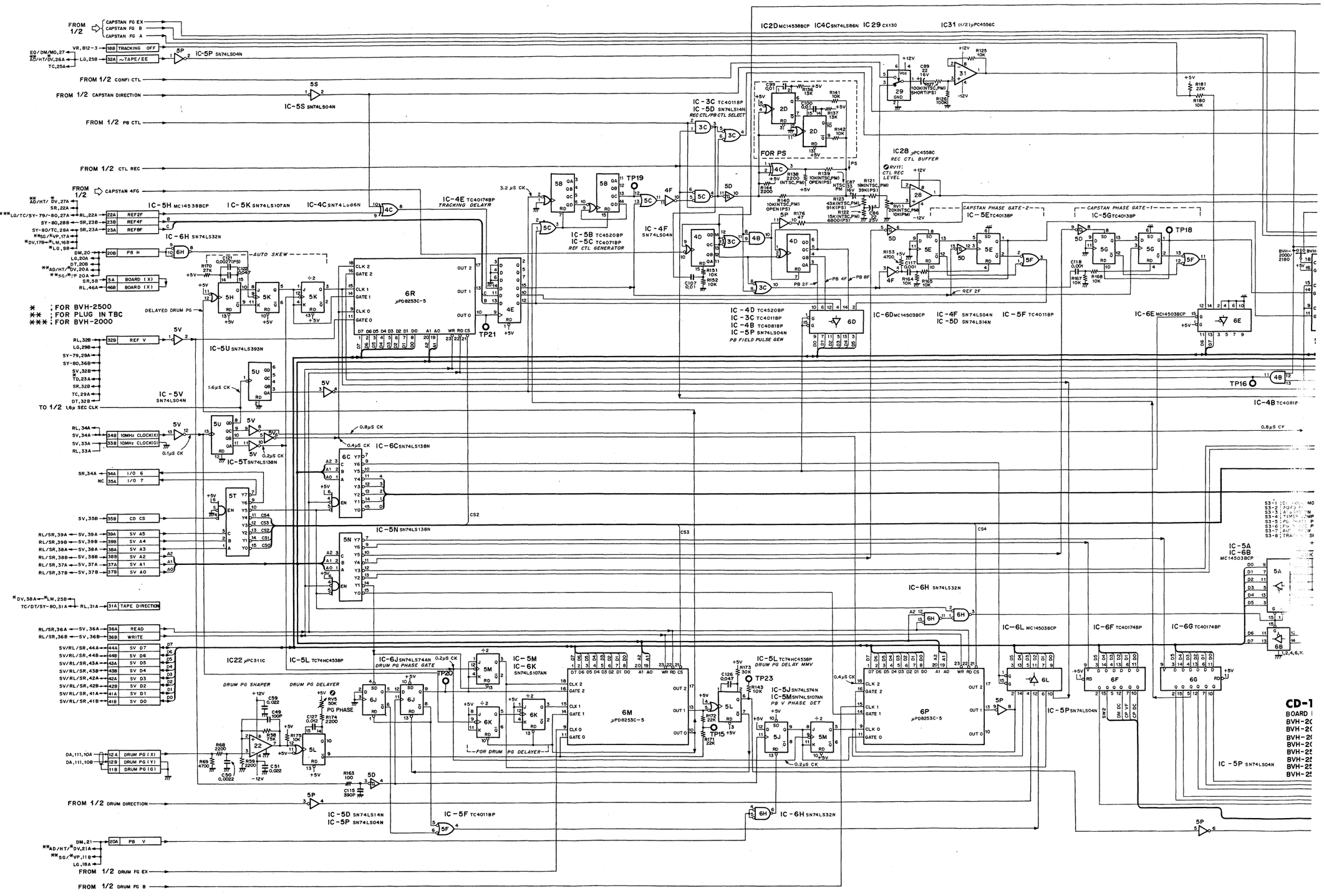

C-89(17/25) C-89(18/25)

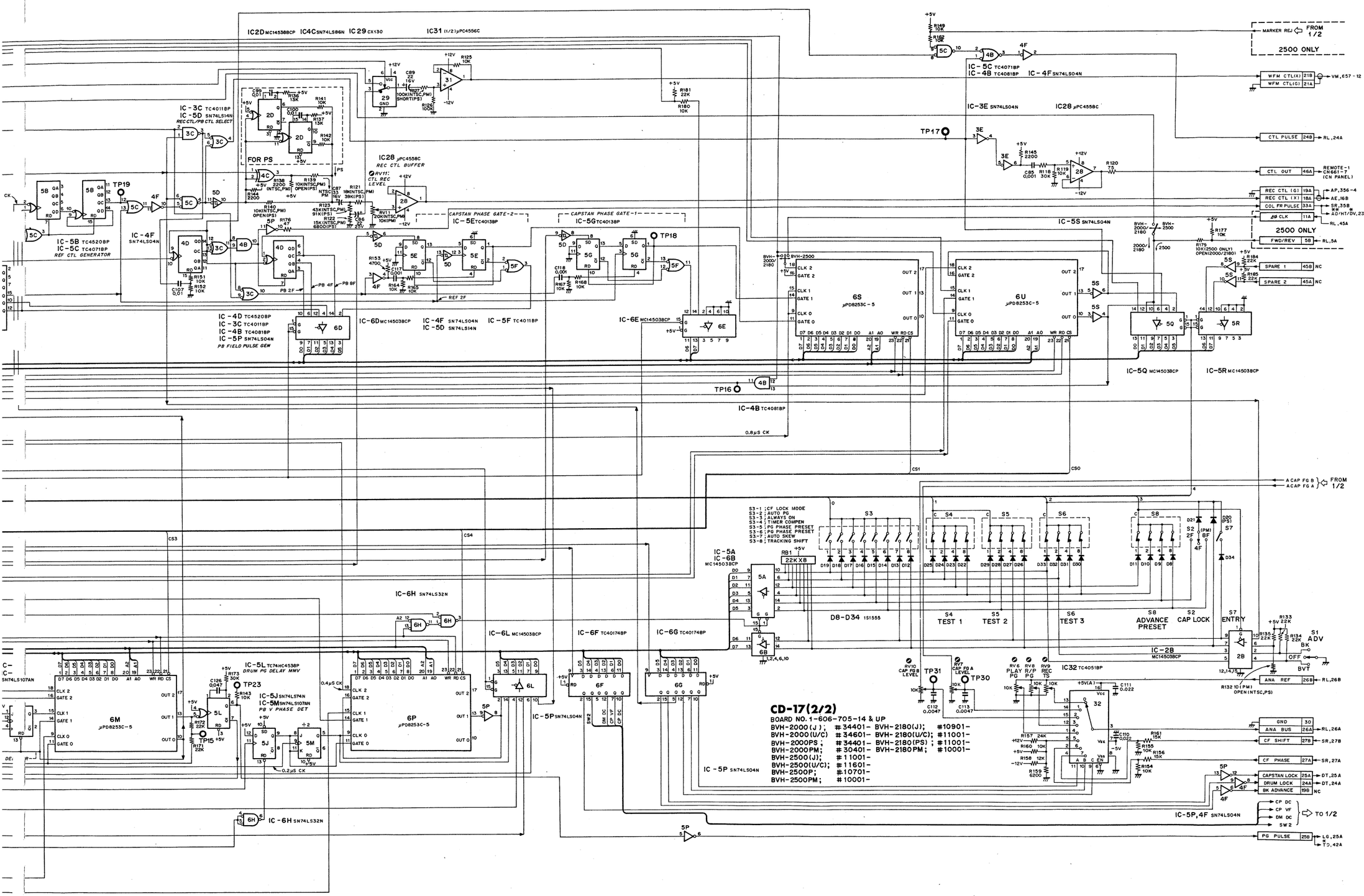

C-89(18/25)

C-89(19/25)

CD-17 BOARD (2/2)

Capstan/Drum Servo

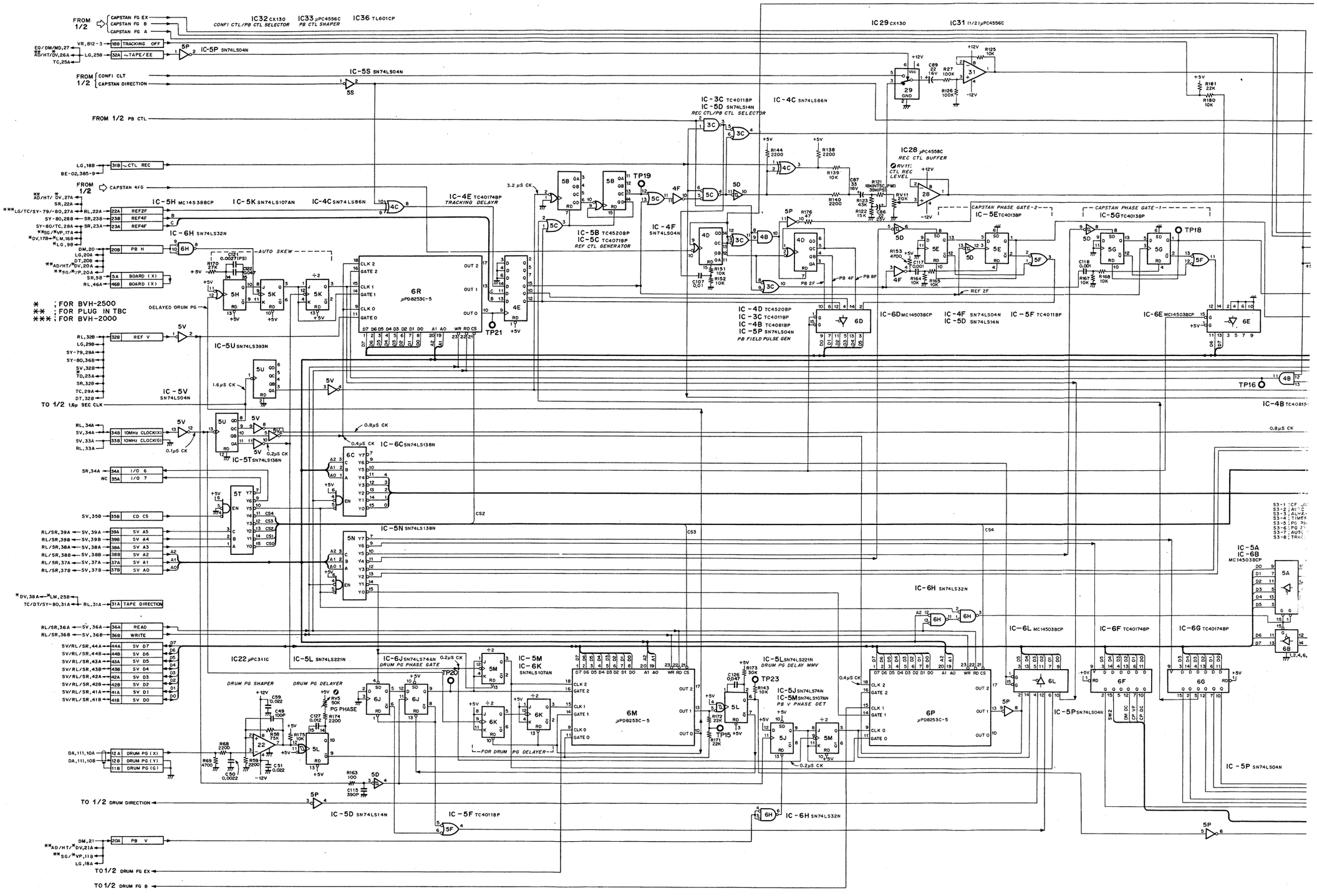

C-89(23/25)

C-89(24/25)

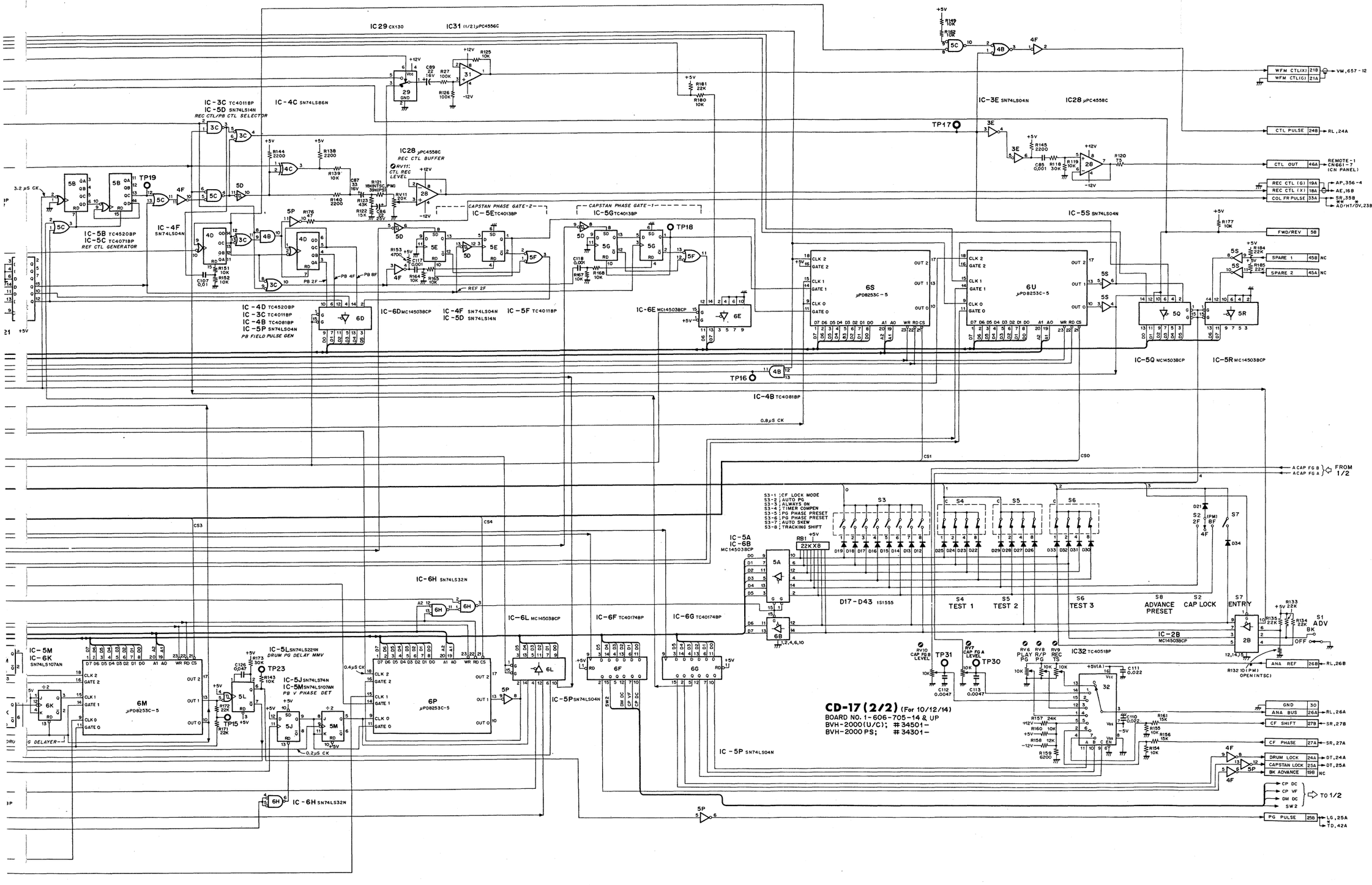
IC-3C TC4011BP
IC-5D SN74LS14N
REC CTL/PB CTL SELECTOR
IC-4C SN74LS86N
IC29 CX130
IC31 (1/2)μPC4556C
IC28 μPC4558C
REC CTL BUFFER
RV11: CTL REC LEVEL
IC-5B TC4520BP
IC-5C TC4071BP
REF CTL GENERATOR
IC-4F SN74LS04N
IC-4D TC4520BP
IC-3C TC4011BP
IC-4B TC4081BP
IC-5P SN74LS04N
PB FIELD PULSE GEN
IC-6D MC14503BCP
IC-4F SN74LS04N
IC-5D SN74LS14N
IC-5F TC4011BP
IC-5E TC4013BP
CAPSTAN PHASE GATE-2
IC-5G TC4013BP
CAPSTAN PHASE GATE-1
IC-6E MC14503BCP
IC-4B TC4081BP
IC-3E SN74LS04N
IC28 μPC4558C
IC-5S SN74LS04N
IC-5Q MC14503BCP
IC-5R MC14503BCP
WFM CTL(X) 21B
WFM CTL(G) 21A
CTL PULSE 24B
CTL OUT 46A
REC CTL (G) 19A
REC CTL (X) 18A
COL FR PULSE 33A
FWD/REV 5B
SPARE 1 45B
SPARE 2 45A
IC-5M SN74LS107AN
IC-6K SN74LS107AN
IC-5L SN74LS221N
DRUM PG DELAY MMV
IC-5J SN74LS74N
IC-5M SN74LS107AN
PB V PHASE DET
IC-6H SN74LS32N
IC-6L MC14503BCP
IC-6F TC40174BP
IC-6G TC40174BP
IC-5A
IC-6B
MC14503BCP
D17-D43 1S1555
S3-1 : CF LOCK MODE
S3-2 : AUTO PG
S3-3 : ALWAYS ON
S3-4 : TIMER COMPEN
S3-5 : PG PHASE PRESET
S3-6 : PG PHASE PRESET
S3-7 : AUTO SKEW
S3-8 : TRACKING SHIFT
S4 TEST 1
S5 TEST 2
S6 TEST 3
S8 ADVANCE PRESET
S2 CAP LOCK
S7 ENTRY
S1 ADV BK
IC-2B MC14503BCP
IC32 TC4051BP
RV10 CAP PG B LEVEL
RV7 CAP PG A LEVEL
RV6 PLAY P/B PG
RV8 R/P PG
RV9 REC TS
CD-17 (2/2) (For 10/12/14)
BOARD NO. 1-606-705-14 & UP
BVH-2000(U/C); #34501-
BVH-2000 PS; #34301-
ACAP FG B
ACAP FG A
FROM 1/2
GND 30
ANA BUS 26A
CF SHIFT 27B
CF PHASE 27A
DRUM LOCK 24A
CAPSTAN LOCK 25A
BK ADVANCE 19B
CP DC
CP VF
DM DC
SW2
TO 1/2
PG PULSE 25B
ANA REF 26B
VM,657-12
RL,24A
REMOTE-1 CN661-7 (CN PANEL)
AP,356-4
AE,16B
SR,35B
AD-HT/DV,238
RL,26A
SR,27B
DT,24A
DT,25A
LG,25A
TD,42A
3.2μS CK
0.8μS CK
0.2μS CK
0.4μS CK
PB 2F
PB 4F
PB 8F
REF 2F
CS0
CS1
CS3
CS4

SR-15 BOARD (1-606-706-14)

Component Side

BVH-2000PS/PM
BVH-2180PS/PM
BVH-2500P

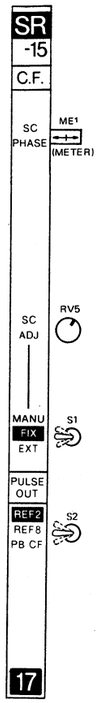

BVH-2000
BVH-2180
BVH-2500

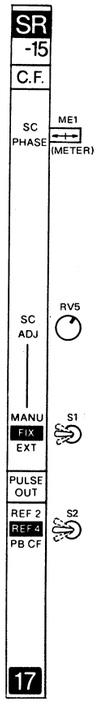

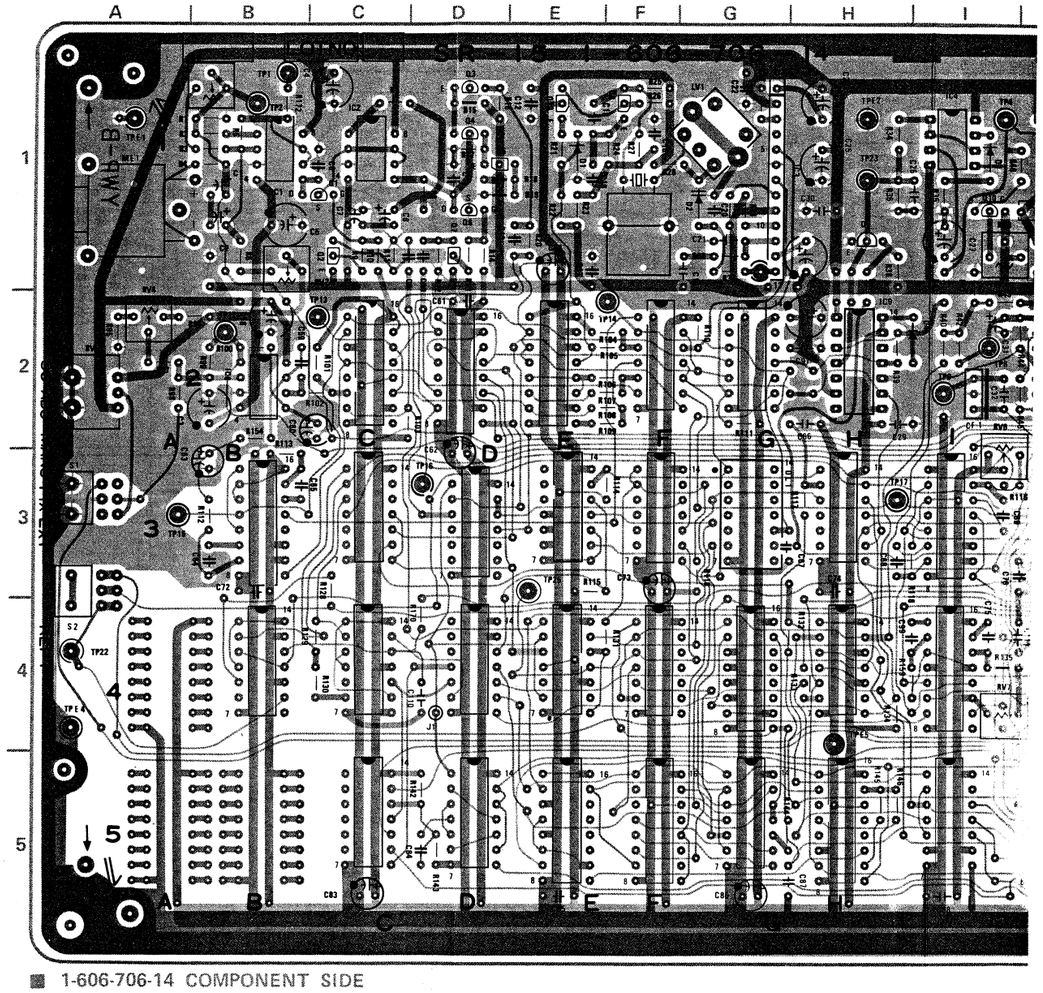

■ 1-606-706-14 COMPONENT SIDE

BVH-2000
BVH-2180
BVH-2500

SR
-15
C.F.

SC PHASE ME1 (METER)
SC ADJ RV5
MANU FIX EXT S1
PULSE OUT
REF 2 REF 4 PB CF S2

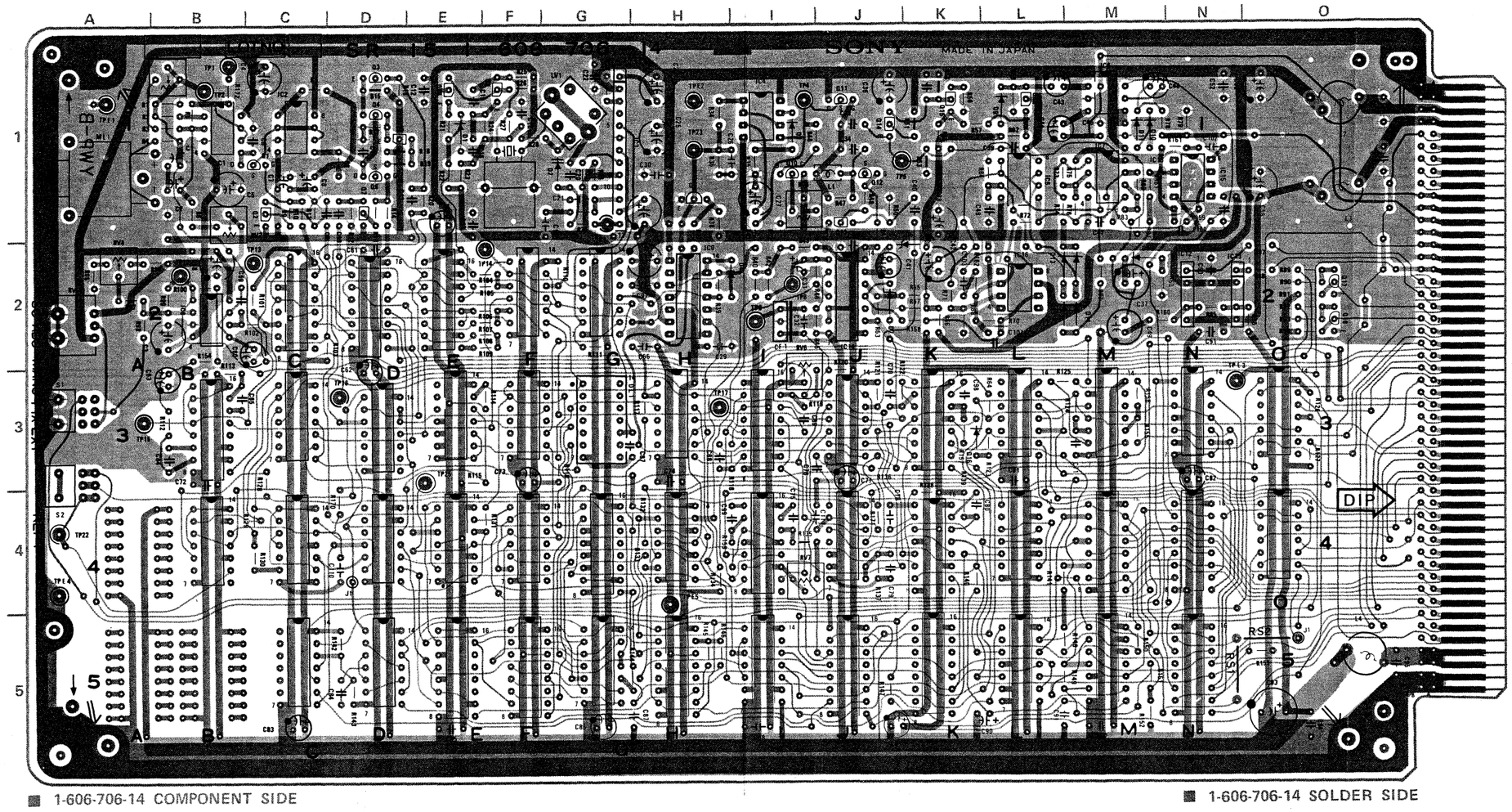

■ 1-606-706-14 COMPONENT SIDE

■ 1-606-706-14 SOLDER SIDE

SR-15 (1-606-706-13 & UP)

BVH-2000/PS/PM		IC6	1M
BVH-2180/PS/PM		IC7	1M
BVH-2500/P		IC8	2B
		IC9	2H
D1	1E	IC12	2N
D2	1G	IC13	2N
D3	1I	IC14	2J
D4	2H	IC15	1N
D6	2J	IC16	2L
D7	2J		
D8	2M	LV1	1G
D9	1L		
D10	1M	ME1	1A
D11	1M		
D12	2M	Q1	1C
D13	2L	Q2	1C
D14	2M	Q3	1D
D15	2L	Q4	1D
D16	3K	Q5	1D
		Q6	1D
DL1	3G	Q7	1D
		Q8	1F
IC1	1B	Q9	1H
IC2	1C	Q10	1I
IC2C		Q11	1J
IC2D		Q12	1J
IC2E		Q13	1J
IC2F		Q14	1J
IC2G		Q15	1K
IC3	1G	Q16	1L
IC3B		Q17	2O
IC3C		Q18	2O
IC3D		Q19	1E
(P,PS,PM)		RV1	1B
IC3E		RV2	1B
		RV3	1I
IC3F		RV4	2A
IC3H		RV5	2A
IC3I		RV6	3I
IC3J		RV7	4I
IC3K			
IC3L		S1	3A
IC3M		S2	3A
IC3N			
IC3O		TP1	1B
IC4	1I	TP2	1B
IC4B		TP3	1G
IC4C		TP4	1I
IC4D		TP5	1J
IC4E			
		(P,PS,PM)	
(P,PS,PM)		TP8	2I
IC4F		TP9	2I
IC4G			
		TP12	2B
IC4H		TP13	2C
IC4I		TP14	1F
IC4J		TP15	3A
IC4K		TP16	3D
IC4L		TP17	3H
IC4M		TP22	4A
IC4N		TP23	1H
IC4O		TP25	3E
IC5	1L		
IC5C		TPE1	1A
IC5D		TPE2	1H
		TPE3	3N
(P,PS,PM)		TPE4	4A
IC5E		TPE5	4H
IC5F			
IC5G		X1	1F
IC5H			
IC5I			
IC5J			
IC5K			
IC5L			
IC5M			
IC5N			

SR-15 BOARD

Servo Ref. Signal Generator

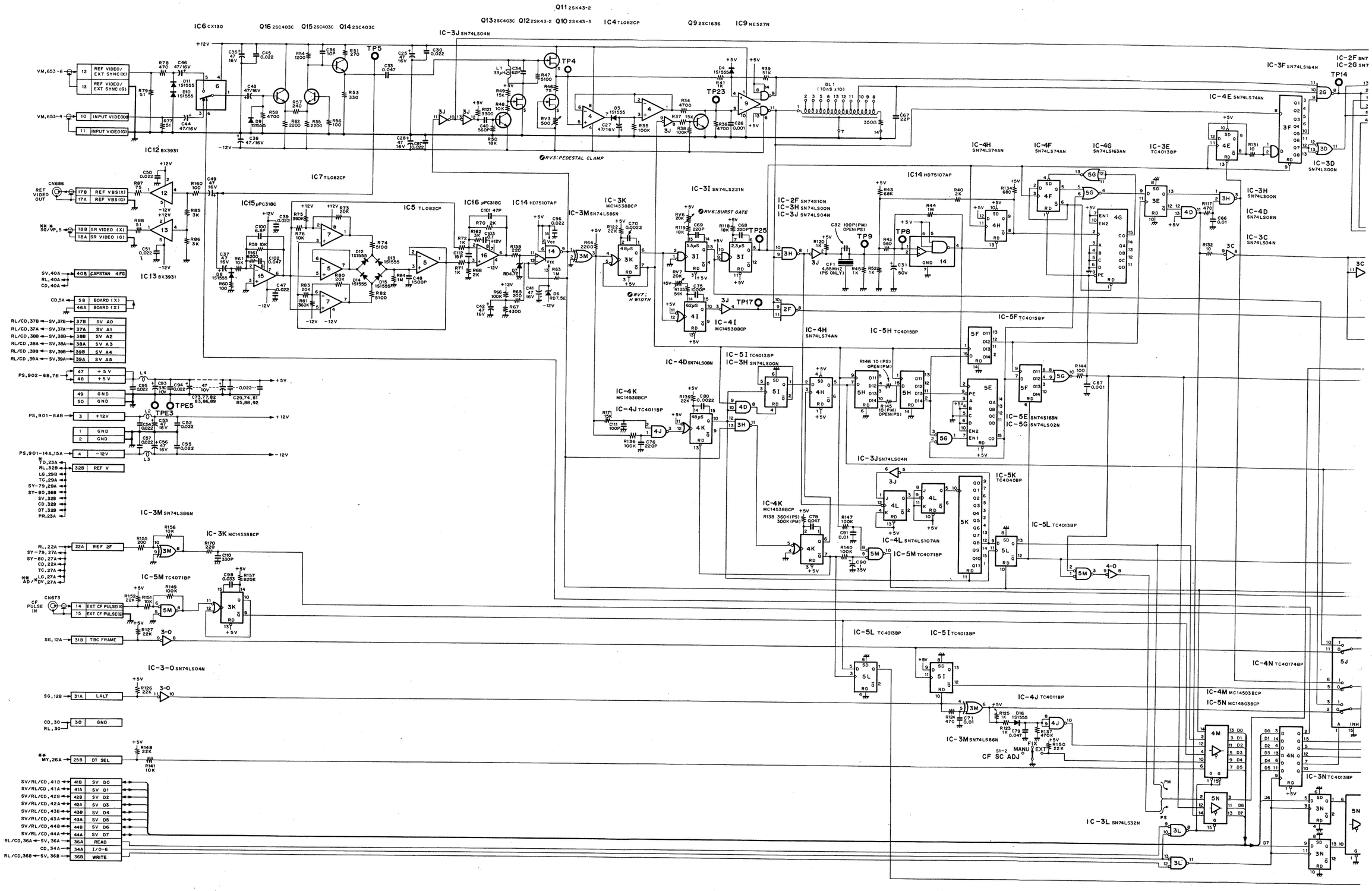

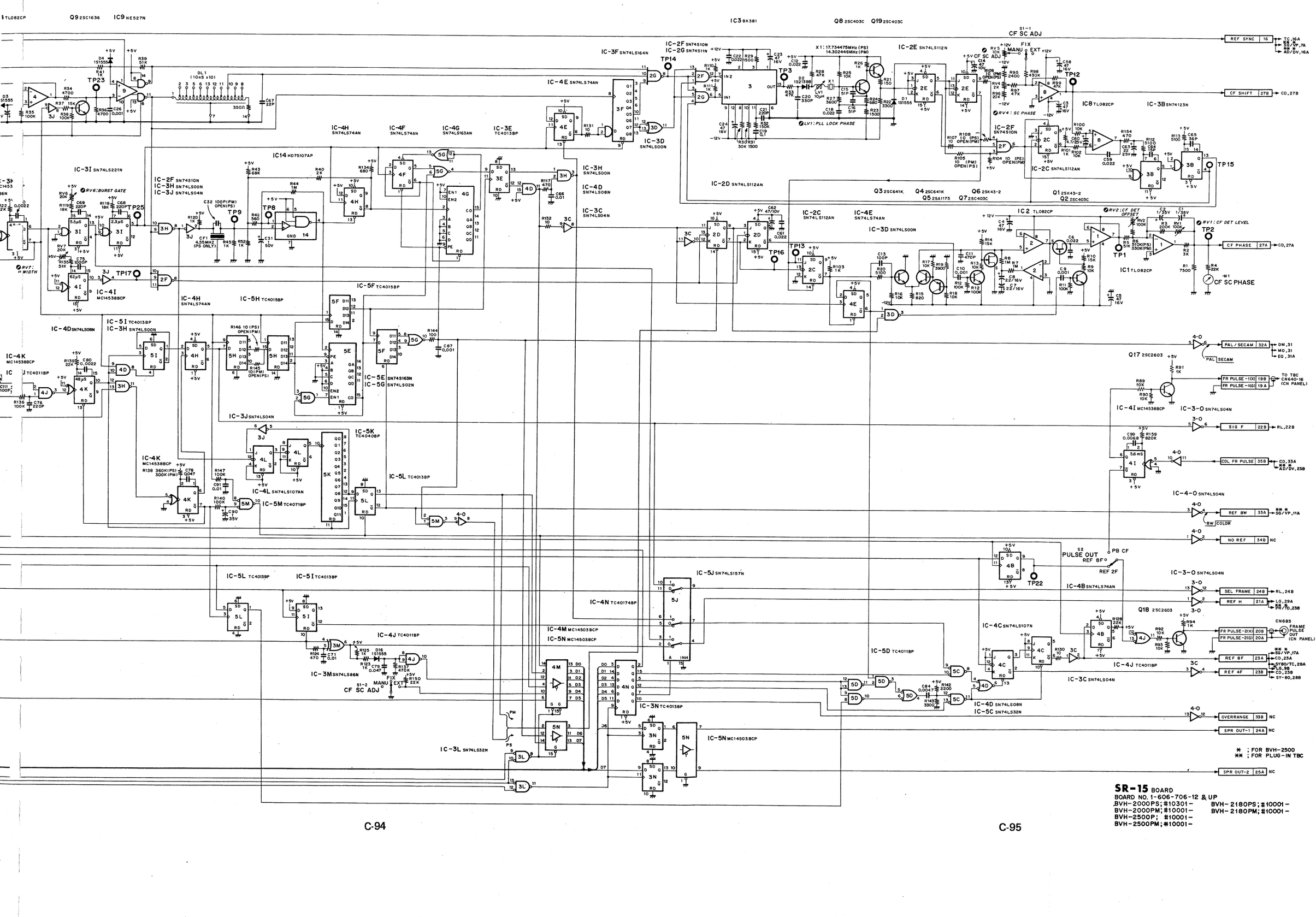

SR-15 BOARD
BOARD NO. 1-606-706-12 & UP
BVH-2000PS; #10301- BVH-2180PS; #10001-
BVH-2000PM; #10001- BVH-2180PM; #10001-
BVH-2500P; #10001-
BVH-2500PM; #10001-

DT-05 BOARD (1-606-718-14)

Component Side

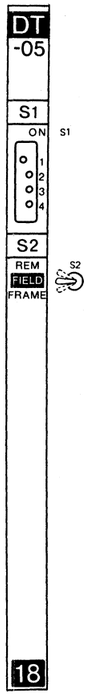

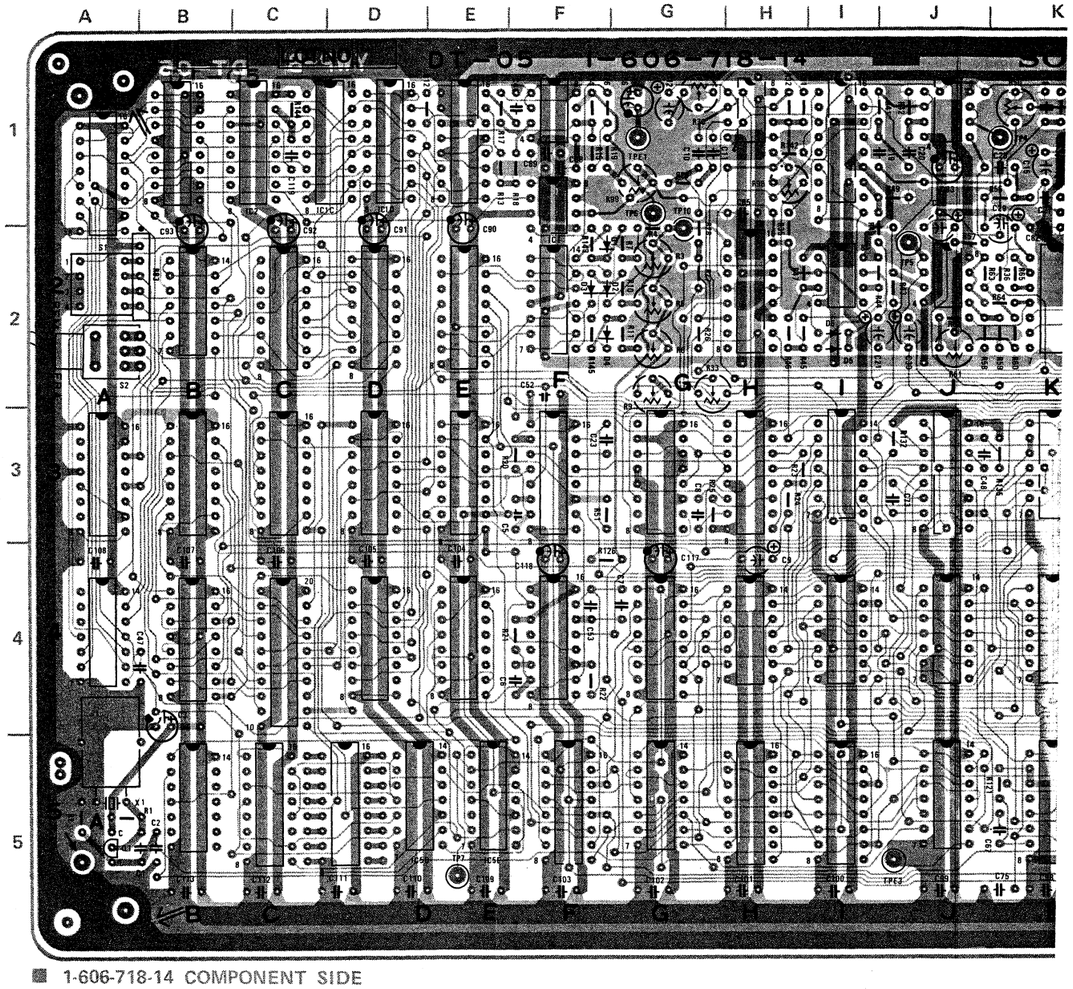

■ 1-606-718-14 COMPONENT SIDE

RB1, 2

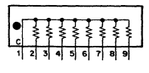

RB3

DT-05 (FOR 02/12/04/14) CARD RACK 1-606-718-14

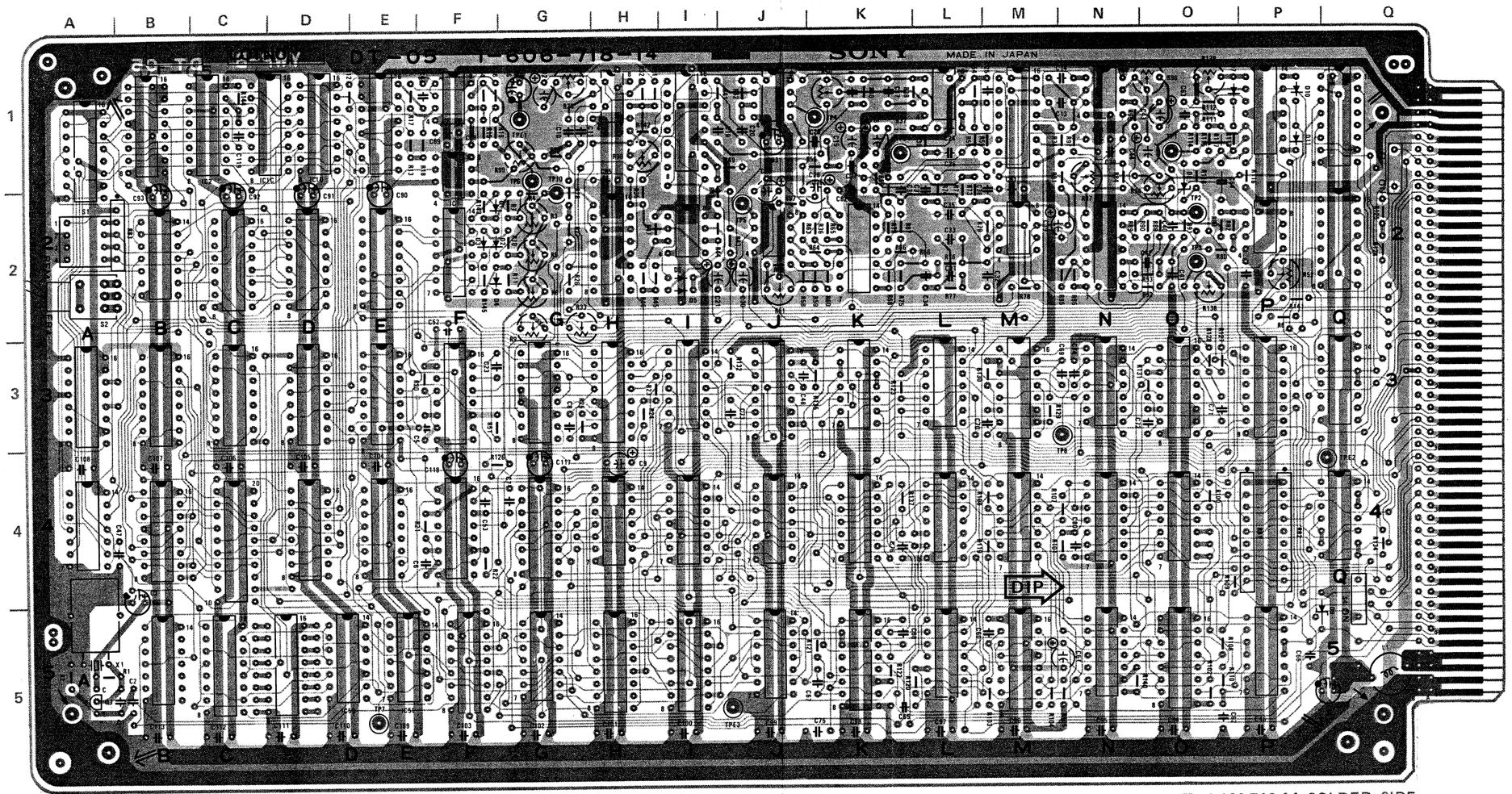

■ 1-606-718-14 COMPONENT SIDE

■ 1-606-718-14 SOLDER SIDE

DT-05 (1-606-718-13 & UP)

BVH-2000PS
BVH-2180PS
(02/12/04/14 MODEL)

BVH-2500P

D1	2F	IC4G	
D2	2F	IC4H	
D3	2F	IC4I	
D4	2F	IC4J	
D5	2I	IC4K	
D6	2I	IC4L	
D7	1P	IC4M	
D8	1O	IC4N	
D9	5O	IC4O	
D10	1P	IC4Q	
D11	1P	IC5B	
		IC5C	
IC1	1F	IC5C1	
IC1A		IC5D	
IC1B		IC5E	
IC1C		IC5F	
IC1C1		IC5G	
IC1D		IC5H	
IC1E		IC5I	
IC1F		IC5J	
IC1H		IC5K	
IC1I		IC5L	
IC1J		IC5M	
IC1L		IC5N	
IC1M		IC5O	
IC1N		IC5P	
IC1O			
IC1P		Q1	5A
IC2A			
IC2B		R3	2G
IC2C		R5	2G
IC2D		R6	2G
IC2E		R9	2G
IC2F		R30	1G
IC2H		R33	2G
IC2I		R50	1K
IC2J		R52	2P
IC2K		R61	2J
IC2M		R87	1N
IC2N		R94	1O
IC2P		R96	1O
IC2Q		R98	1H
IC3A		R99	1G
IC3B		R138	2O
IC3D		R139	1O
IC3E			
IC3F		RB1	4P
IC3G		RB2	4P
IC3H		RB3	2A
IC3I			
IC3J		S1	3C
IC3K		S2	2A
IC3L		S3	1Q
IC3M		S4	4Q
IC3N			
IC3O		TP1	1O
IC3P		TP2	2O
IC3Q		TP3	2O
IC4A		TP4	1K
IC4B		TP5	2J
IC4C		TP6	1F
IC4D		TP7	5E
IC4E		TP8	3N
IC4F		TP9	1K
		TP10	1G
		TPE1	1G
		TPE2	3Q
		TPE3	5J
		X1	5A

RB1, 2

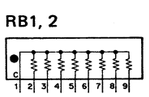

RB3

DT-05 BOARD; FOR 02/12/04/14 MODEL

DT Control

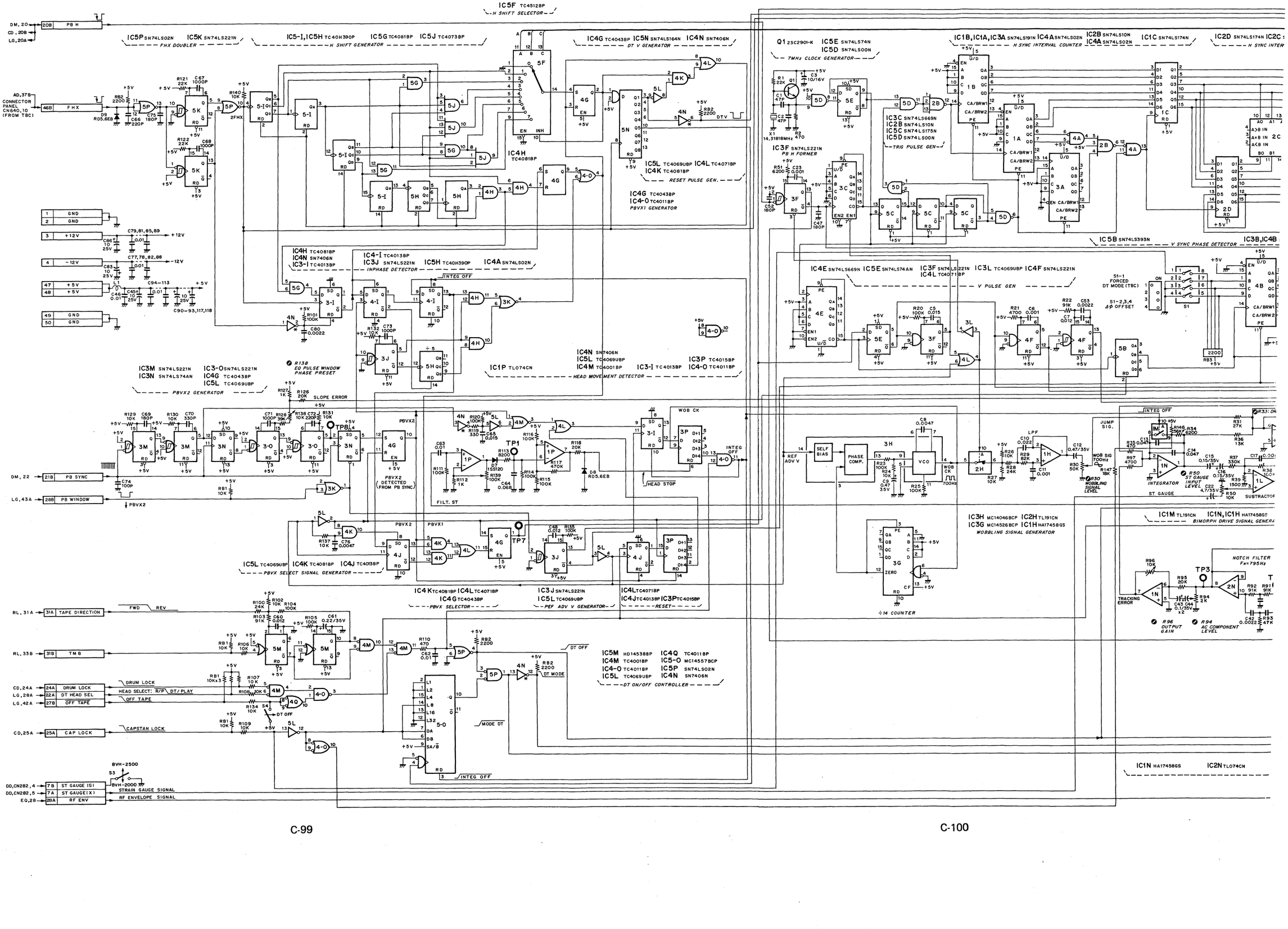

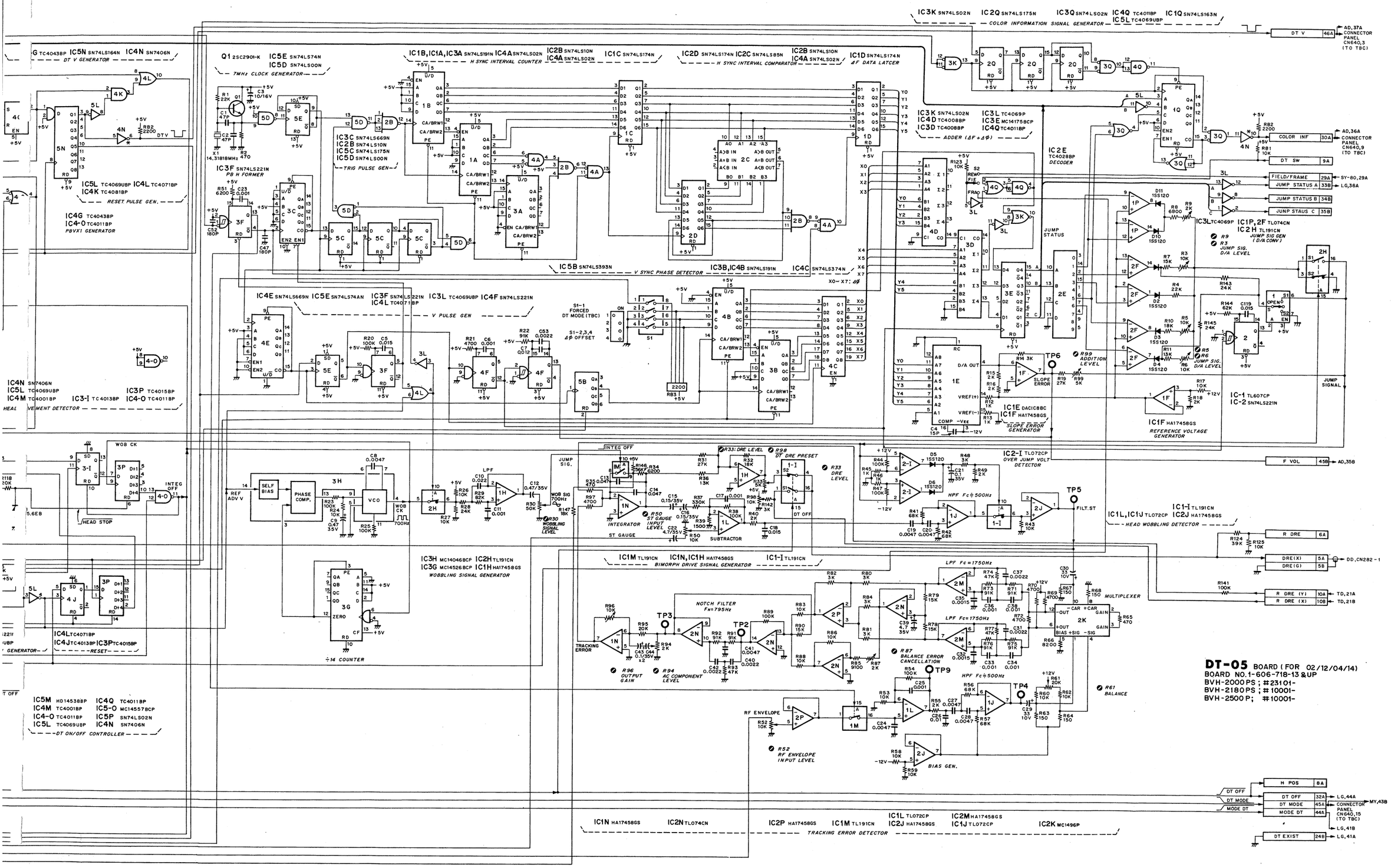
DT-05 BOARD (FOR 02/12/04/14)
BOARD NO.1-606-718-13 &UP
BVH-2000PS ; #23101-
BVH-2180PS ; #10001-
BVH-2500P ; #10001-
COLOR INFORMATION SIGNAL GENERATOR
H SYNC INTERVAL COUNTER
H SYNC INTERVAL COMPARATOR
ΔF DATA LATCER
V SYNC PHASE DETECTOR
V PULSE GEN
ADDER (ΔF+ΔΦ)
DECODER
REFERENCE VOLTAGE GENERATOR
SLOPE ERROR GENERATOR
OVER JUMP VOLT DETECTOR
HEAD WOBBLING DETECTOR
BIMORPH DRIVE SIGNAL GENERATOR
WOBBLING SIGNAL GENERATOR
÷14 COUNTER
MULTIPLEXER
BIAS GEN.
TRACKING ERROR DETECTOR
DT ON/OFF CONTROLLER
RESET
HEAD STOP
DT V
COLOR INF
DT SW
FIELD/FRAME
JUMP STATUS A
JUMP STATUS B
JUMP STAUS C
JUMP SIGNAL
F VOL
R DRE
DRE(X)
DRE(G)
R DRE (Y)
R DRE (X)
H POS
DT OFF
DT MODE
MODE DT
DT EXIST
CONNECTOR PANEL CN640,15 (TO TBC)

MB-14A BOARD

Mother Board

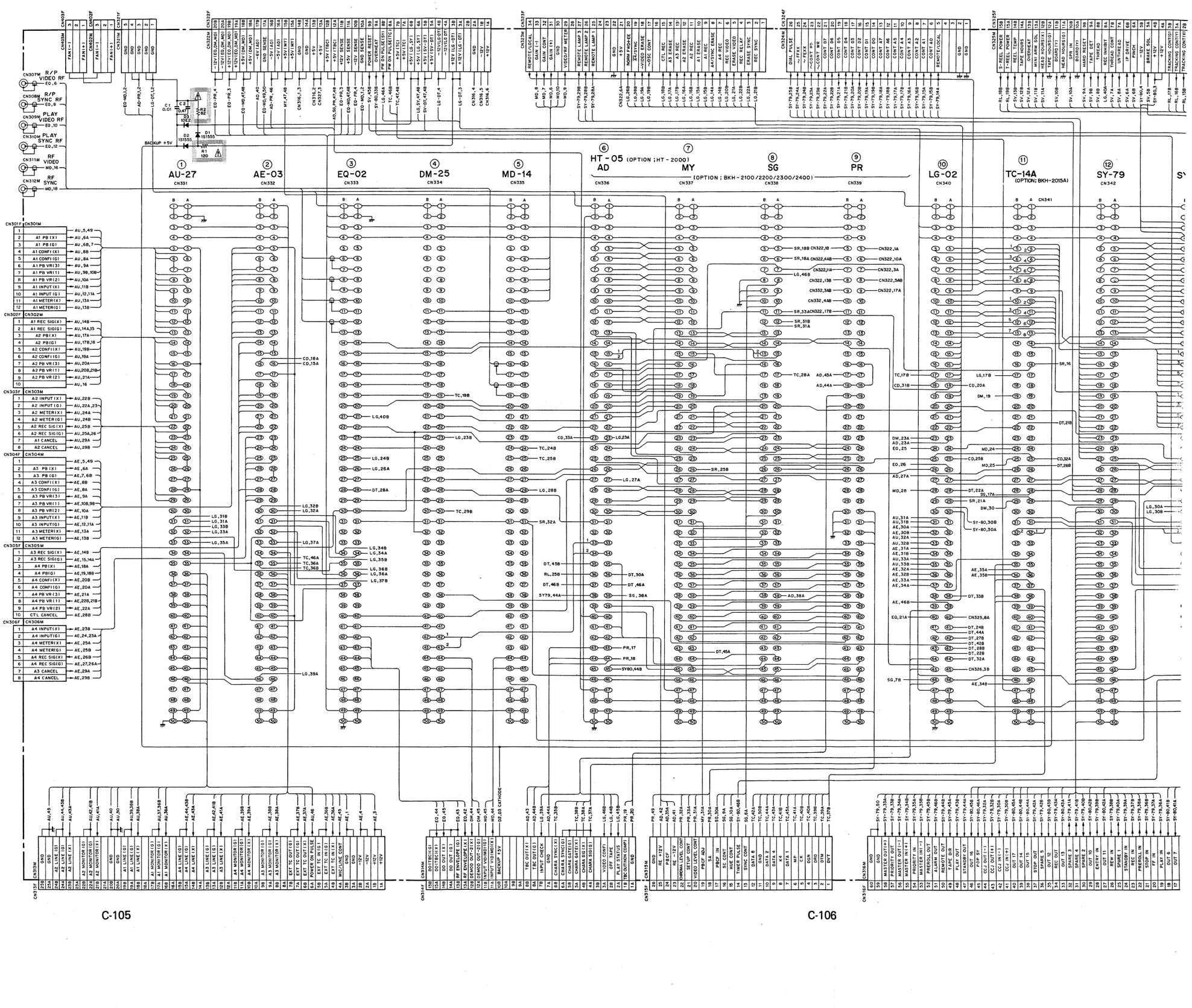

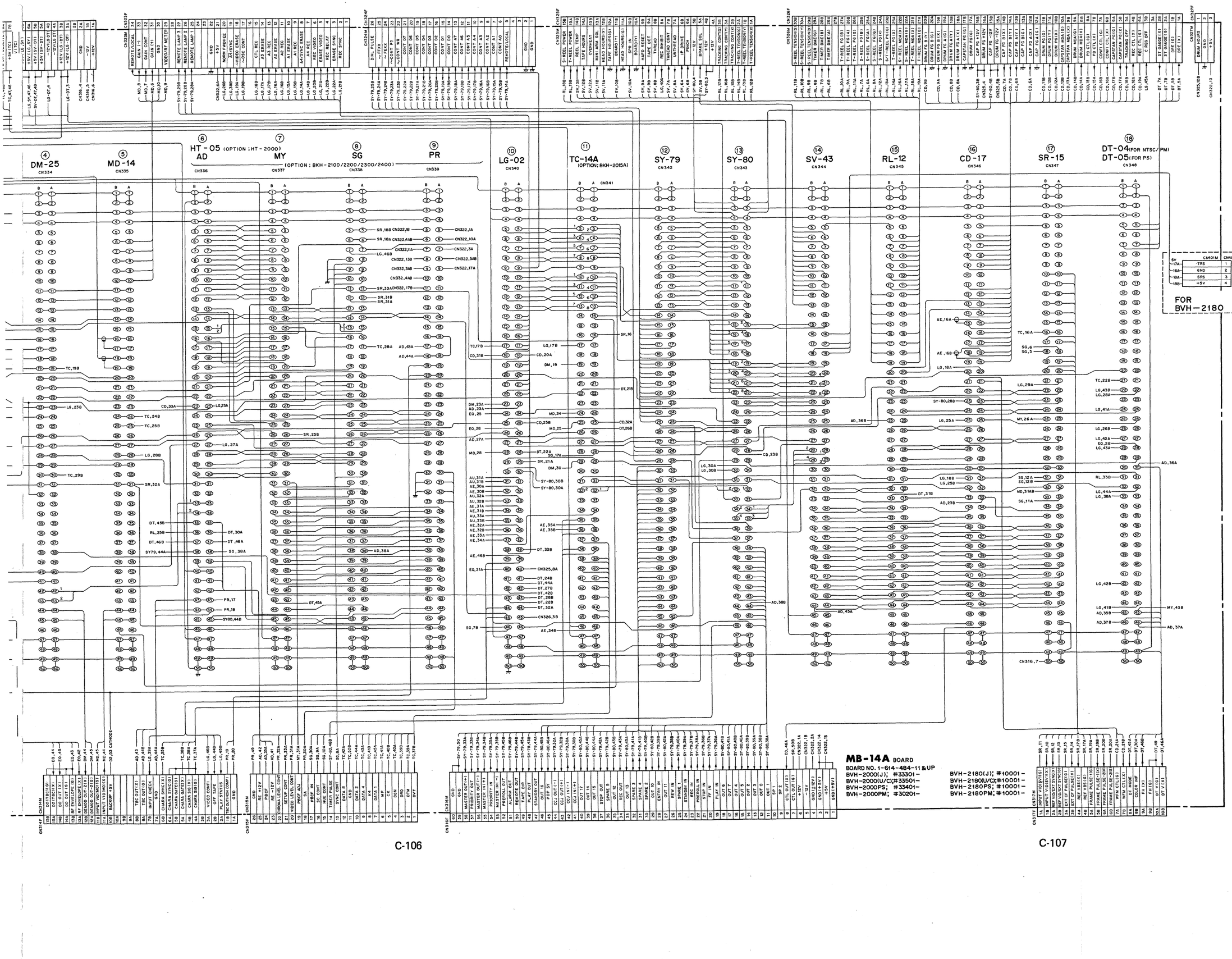
CN333M
CN323F
CN324M
CN324F
CN325M
CN325F
CN326M
CN326F
CN327M
CN327F
④ DM-25 CN334
⑤ MD-14 CN335
⑥ HT-05 (OPTION ; HT-2000) AD CN336
⑦ MY (OPTION ; BKH-2100/2200/2300/2400) CN337
⑧ SG CN338
⑨ PR CN339
⑩ LG-02 CN340
⑪ TC-14A (OPTION; BKH-2015A) CN341
⑫ SY-79 CN342
⑬ SY-80 CN343
⑭ SV-43 CN344
⑮ RL-12 CN345
⑯ CD-17 CN346
⑰ SR-15 CN347
⑱ DT-04(FOR NTSC/PM) DT-05(FOR PS) CN348
FOR BVH-2180
CN315H
CN315F
CN315M
CN316M
CN316F
CN317M
CN317F
MB-14A BOARD
BOARD NO. 1-614-484-11 &UP
BVH-2000(J); #33301-
BVH-2000(U/C);#33501-
BVH-2000PS; #33401-
BVH-2000PM; #30201-
BVH-2180(J); #10001-
BVH-2180(U/C);#10001-
BVH-2180PS; #10001-
BVH-2180PM; #10001-

BVH-2000/PS/PM C-111 C-112 C-113 C-114 C-141 C-142 C-143 C-144 BVH-2500/P

FRAME WIRING; CARD RACK; FOR 00/02 MODELS

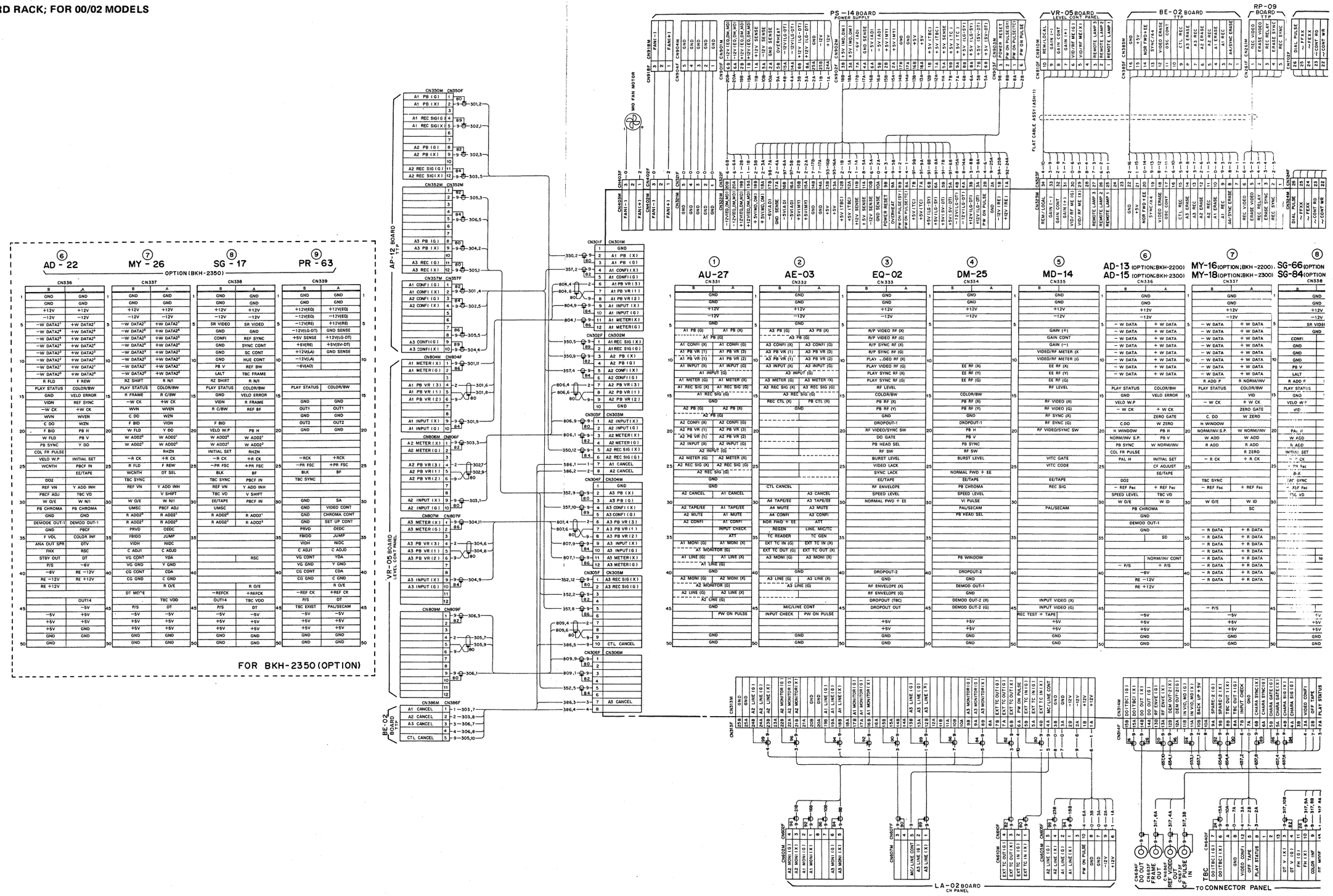

FRAME WIRING
CARD RACK (00/02)
BVH-2000PS; #33401-
BVH-2180PS; #10001-

FRAME WIRING; CARD RACK; FOR 04 MODEL

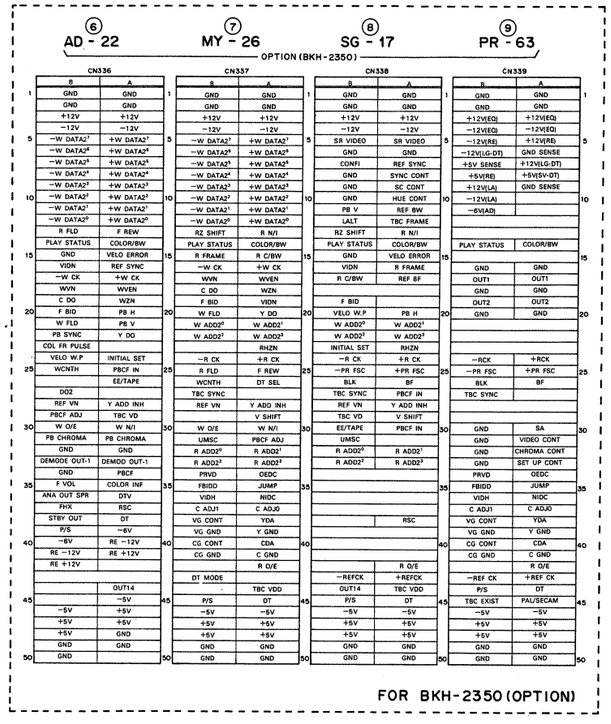

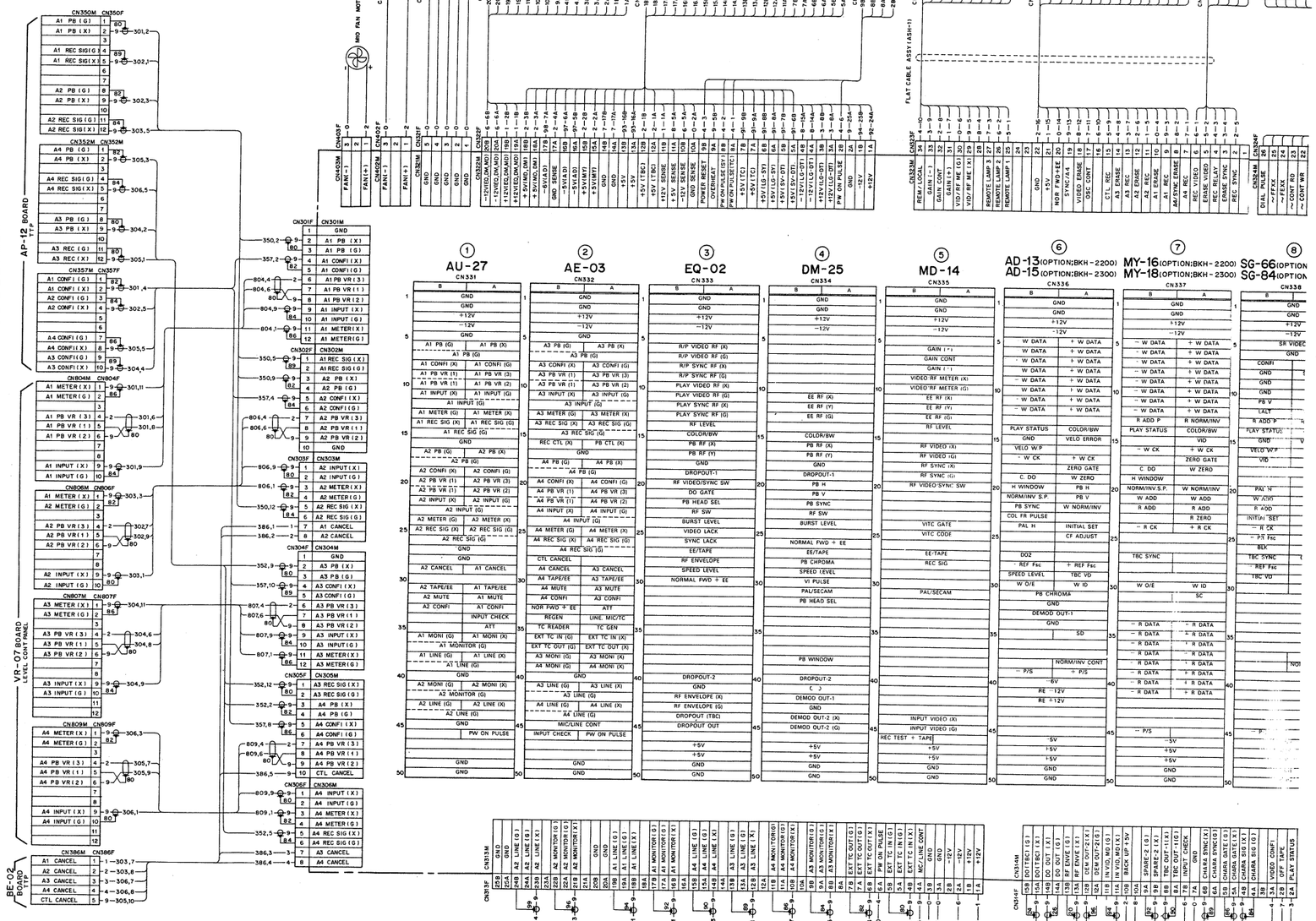

C-114(6/17)

C-114(7/17)

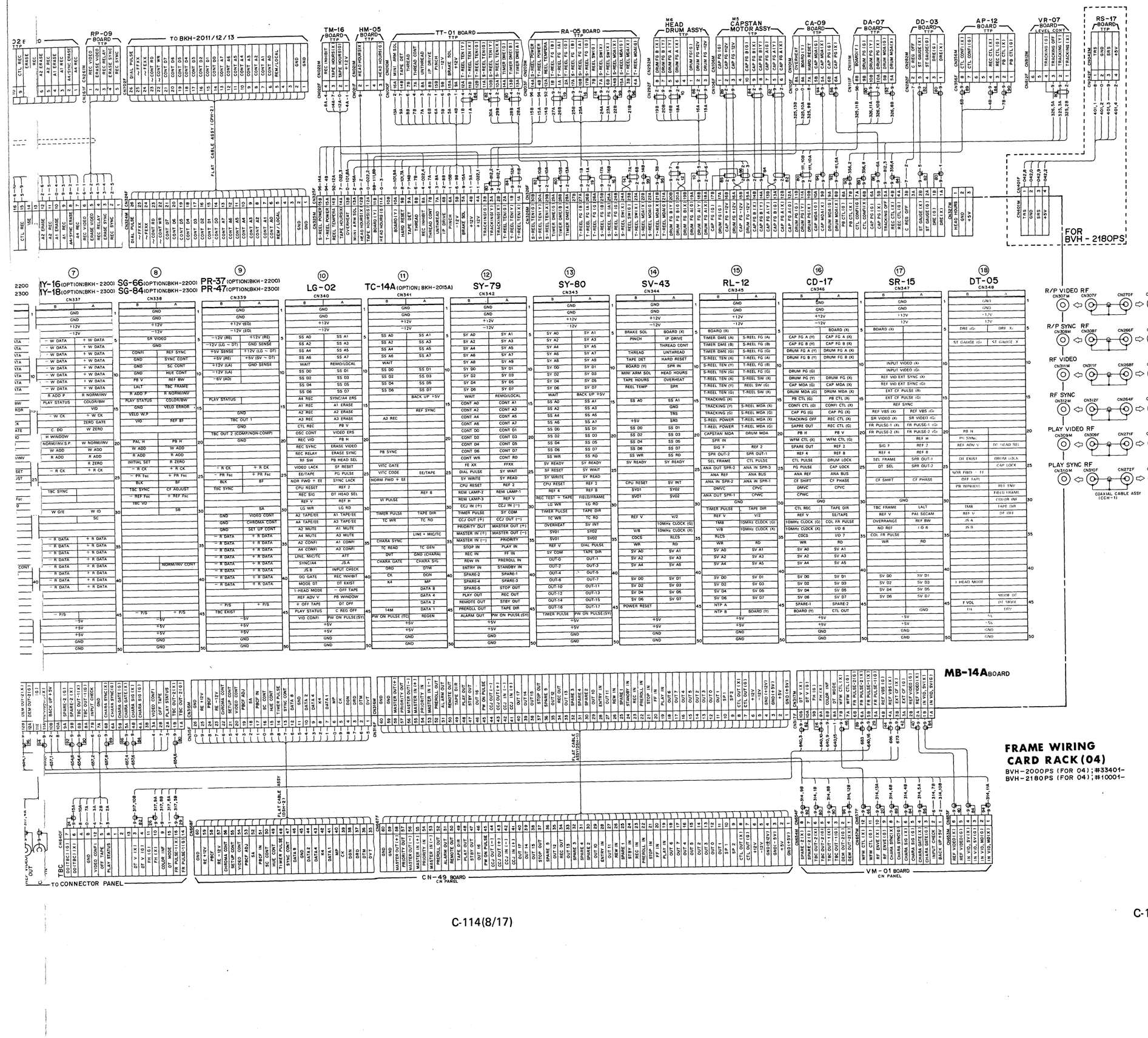
RP-09 BOARD TTP
TO BKH-2011/12/13
FLAT CABLE ASSY (CCH-2)
TM-16 BOARD TTP
HM-05 BOARD TTP
TT-01 BOARD TTP
RA-05 BOARD TTP
ME HEAD DRUM ASSY TTP
ME CAPSTAN MOTOR ASSY TTP
CA-09 BOARD TTP
DA-07 BOARD TTP
DD-03 BOARD TTP
AP-12 BOARD TTP
VR-07 BOARD LEVEL CONT
RS-17 BOARD TTP
FOR BVH-2180PS
(7) IY-16 (OPTION:BKH-2200) IY-18 (OPTION:BKH-2300)
(8) SG-66 (OPTION:BKH-2200) SG-84 (OPTION:BKH-2300)
(9) PR-37 (OPTION:BKH-2200) PR-47 (OPTION:BKH-2300)
(10) LG-02
(11) TC-14A (OPTION; BKH-2015A)
(12) SY-79
(13) SY-80
(14) SV-43
(15) RL-12
(16) CD-17
(17) SR-15
(18) DT-05
R/P VIDEO RF
R/P SYNC RF
RF VIDEO
RF SYNC
PLAY VIDEO RF
PLAY SYNC RF
RP-09 BOARD TTP
HEAD DRUM ASSY TTP
COAXIAL CABLE ASSY (CCH-1)
MB-14A BOARD
FRAME WIRING CARD RACK (04)
BVH-2000PS (FOR 04) ; #33401-
BVH-2180PS (FOR 04) ; #10001-
TO CONNECTOR PANEL
CN-49 BOARD CN PANEL
VM-01 BOARD CN PANEL
FLAT CABLE ASSY (DSH-2)

FRAME WIRING; CARD RACK; FOR 10/12 MODELS

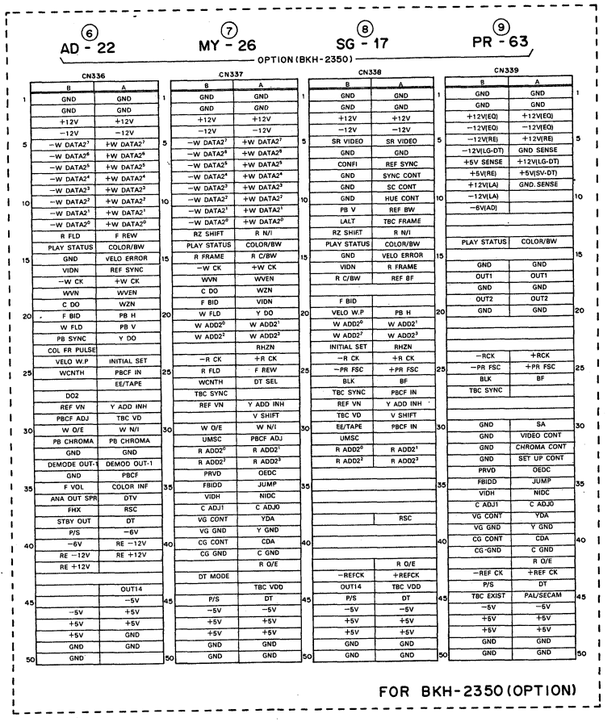

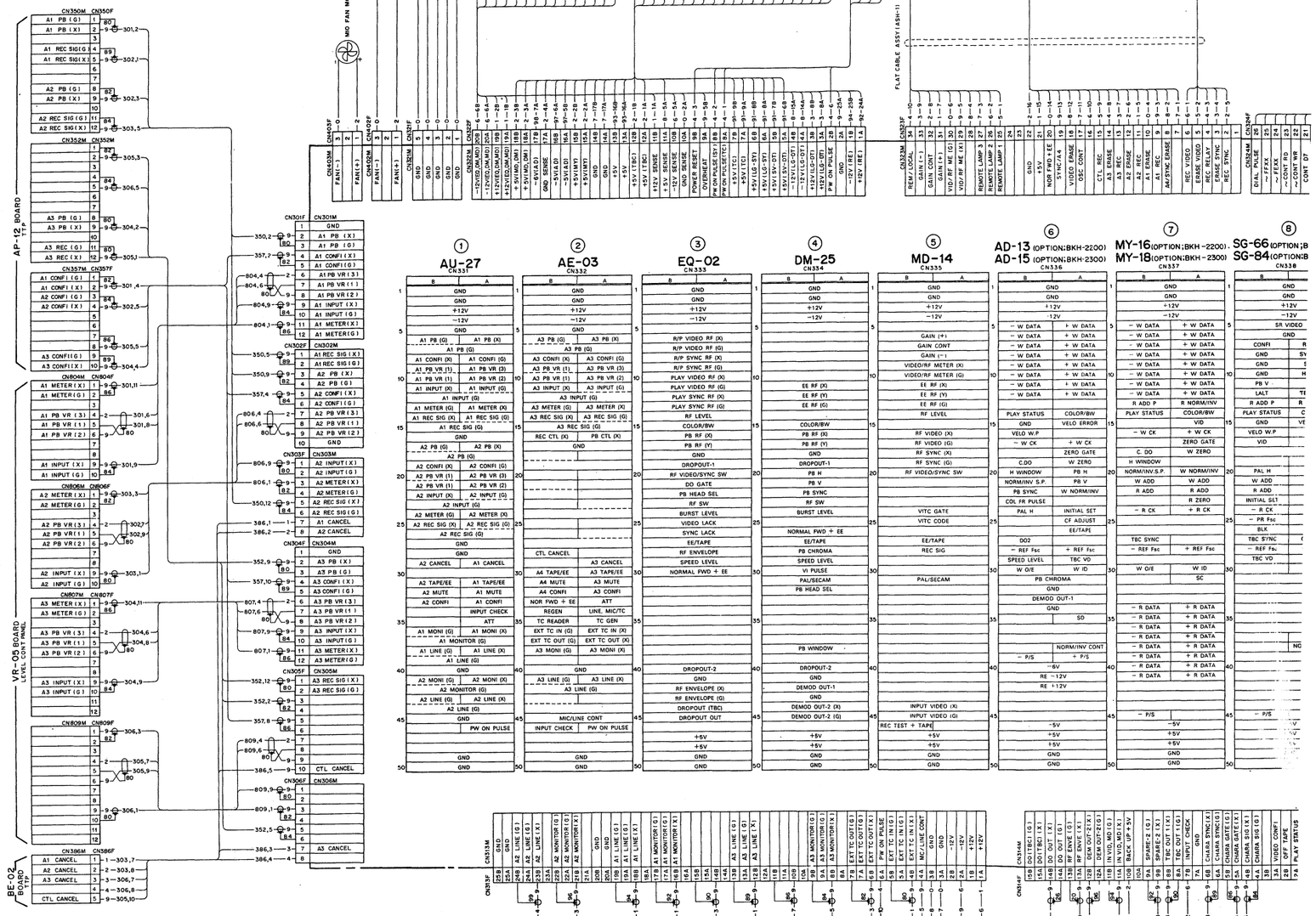

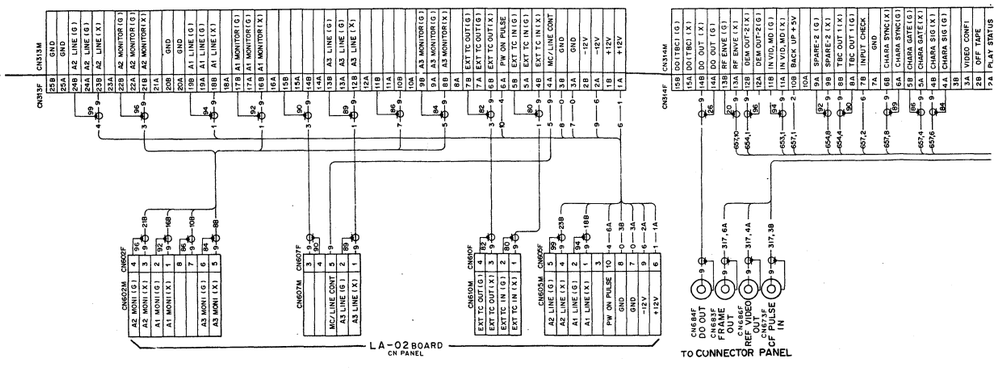

C-114 (10/17)

C-114 (11/17)

BVH-2000PM C-114(4/9) C-114(7/9) C-114(8/9) C-114(9/9)

FRAME WIRING (FOR 10/12) CARD RACK

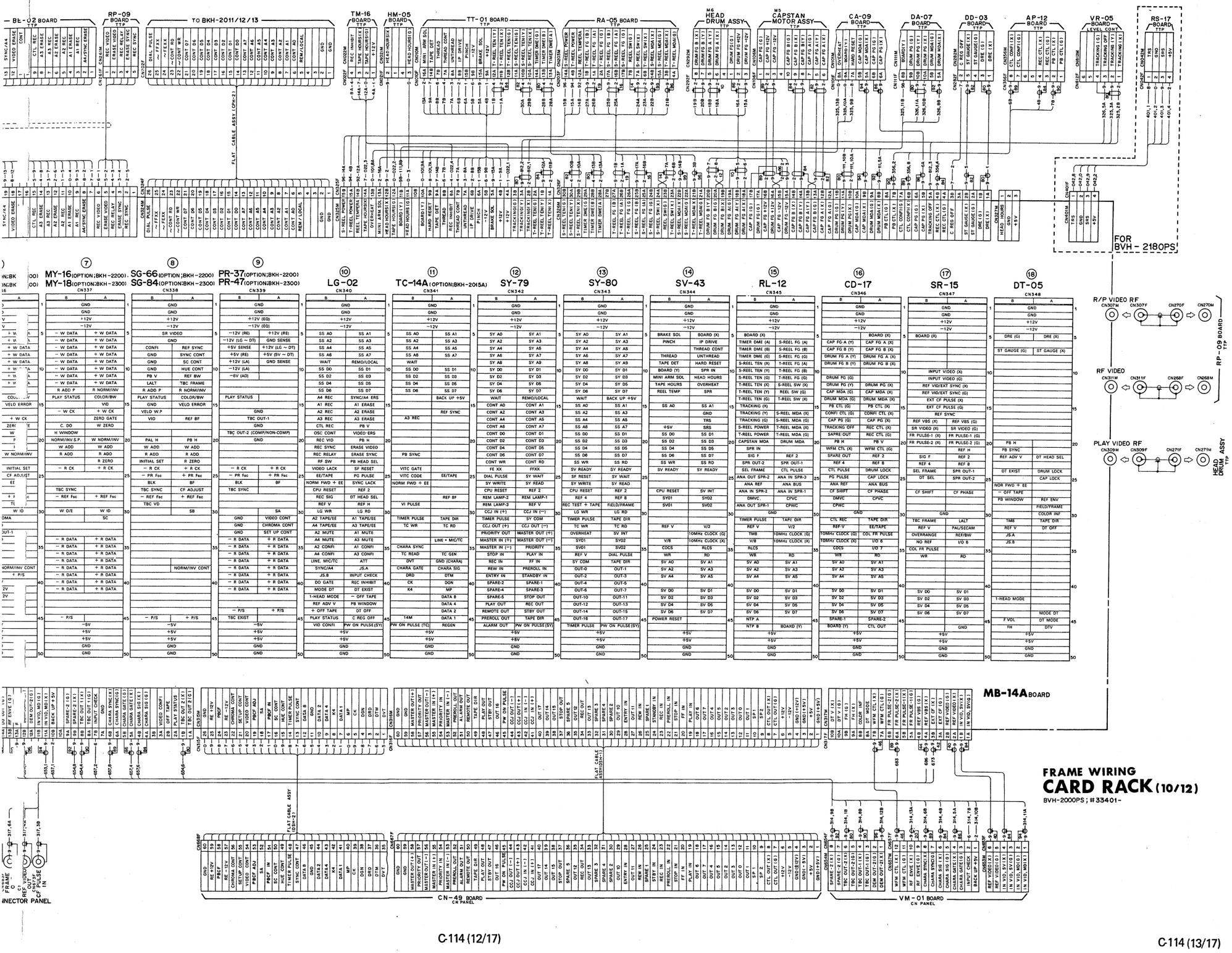

FRAME WIRING

CARD RACK (10/12)

BVH-2000PS ; #33401-

FRAME WIRING; CARD RACK; FOR 14 MODEL

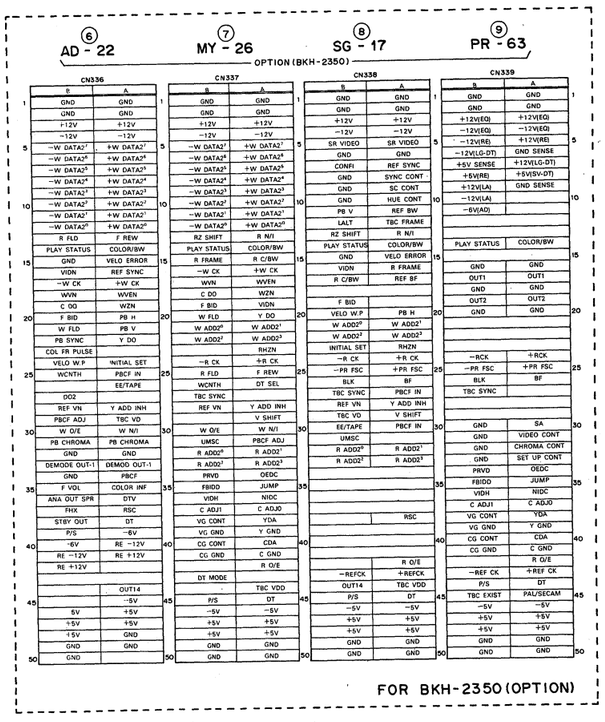

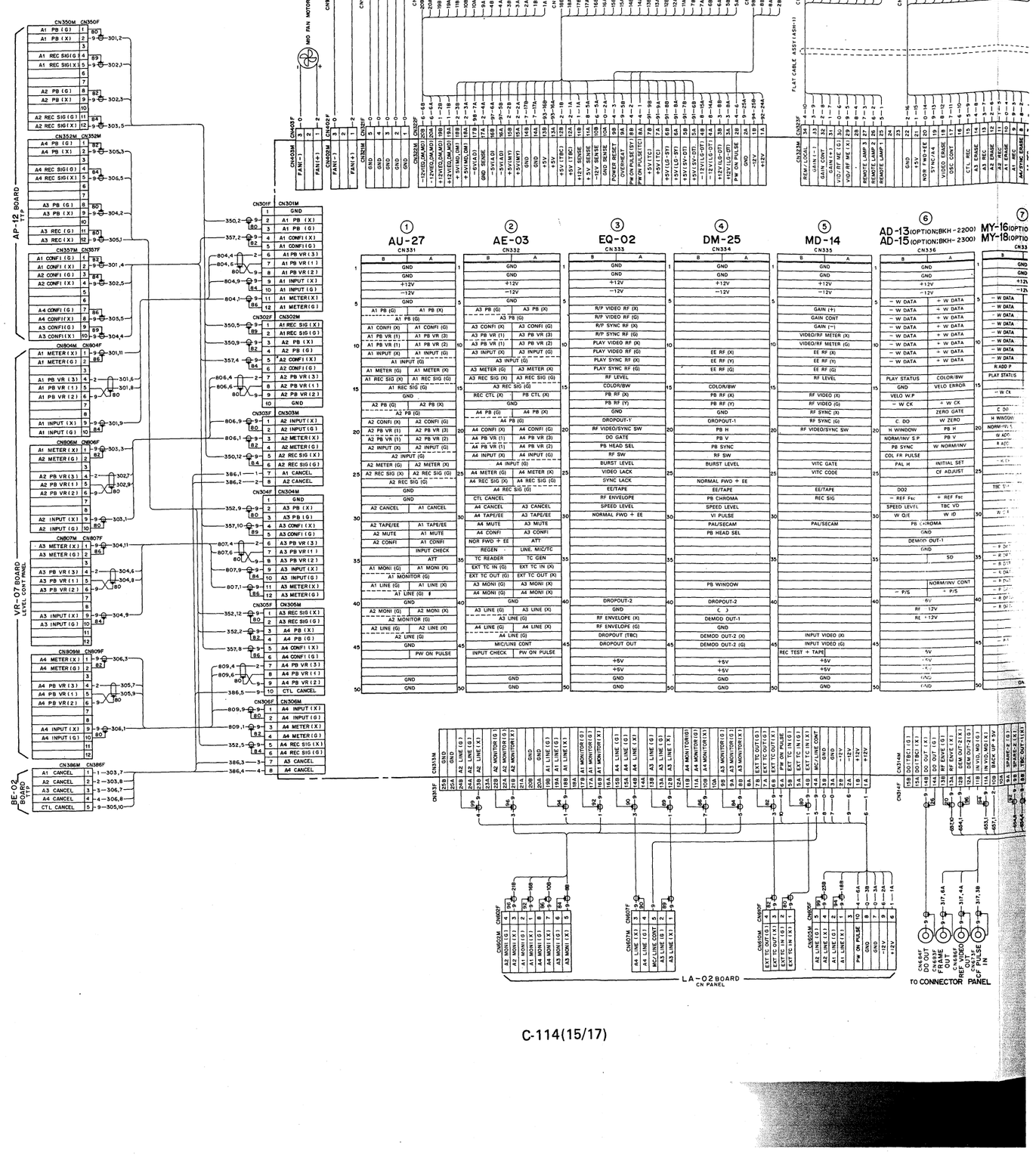

C-114(14/17)

C-114(15/17)

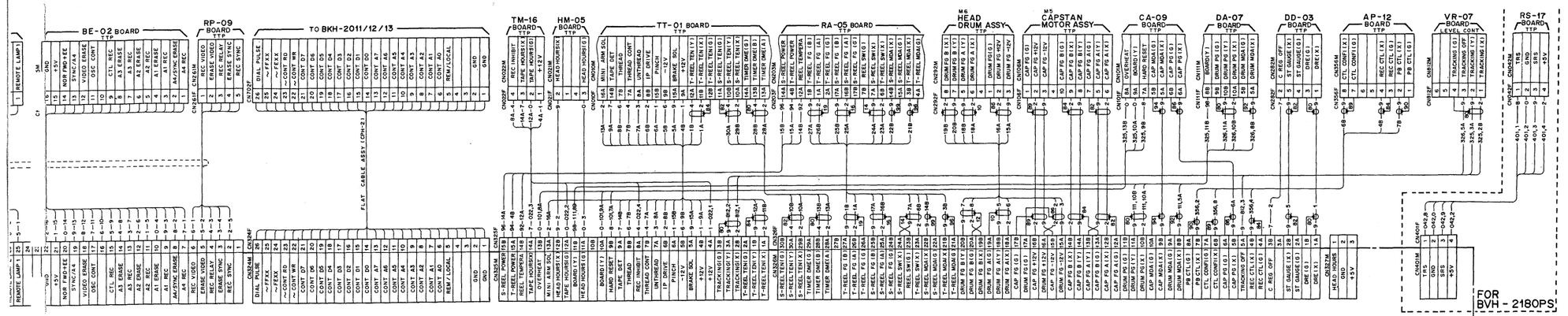

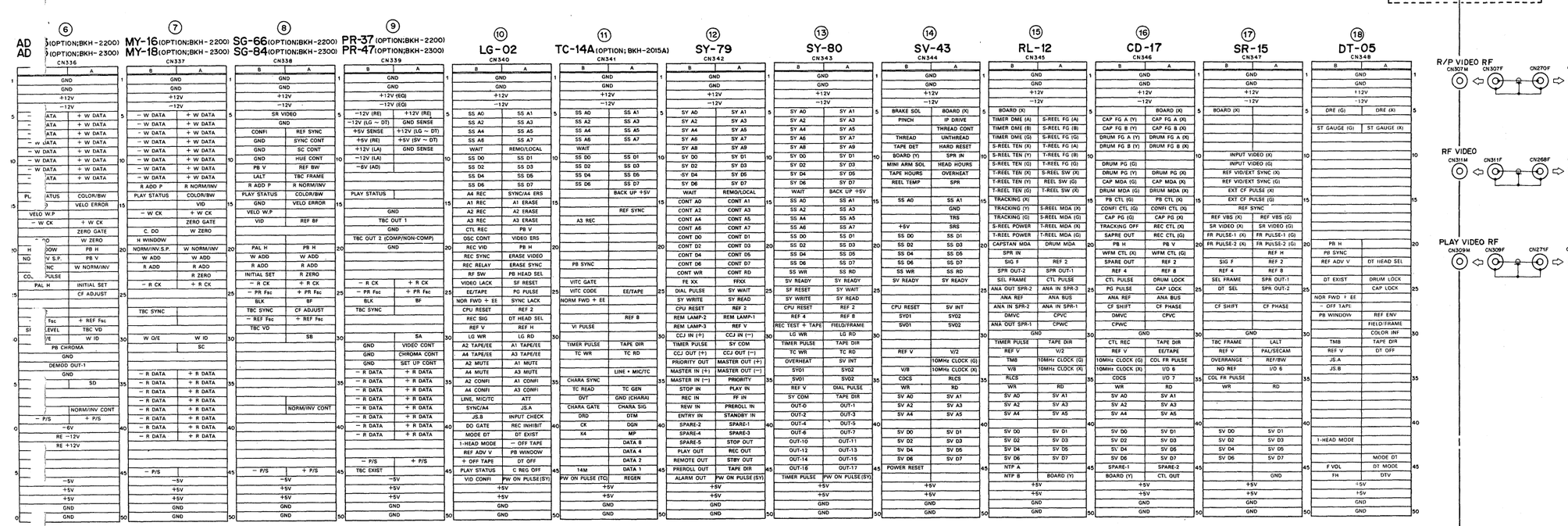

C-114(16/17)

C-114(17/17)

TAPE TRANSPORT **AP-12**

AP-12 TAPE TRANSPORT

AP-12 BOARD (1-614-366-11 & UP)

Component Side

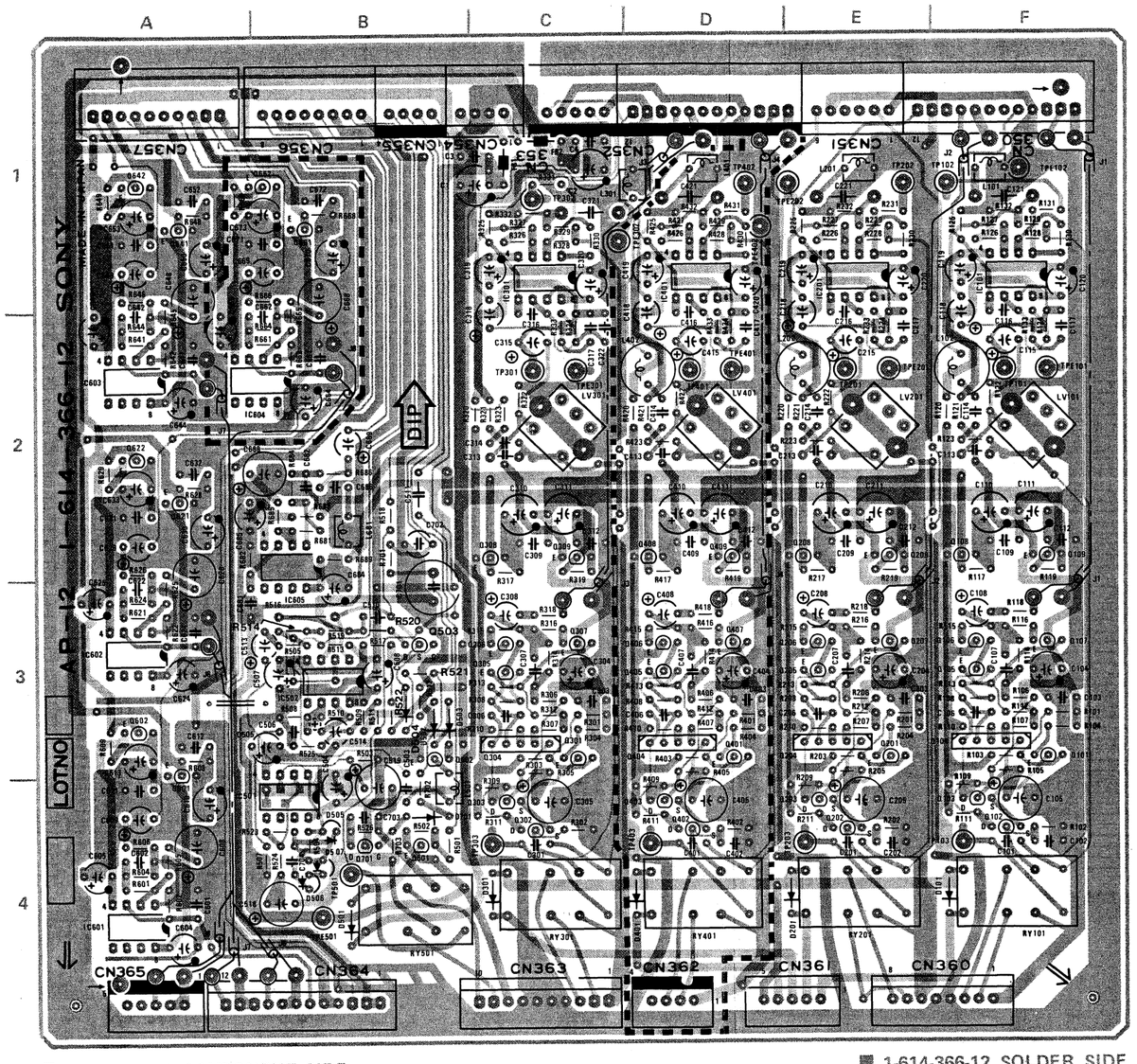

■ 1-614-366-12 COMPONENT SIDE

■ 1-614-366-12 SOLDER SIDE

AP-12 (1-614-366-11 & UP)

BVH-2000/PM
BVH-2180/PM

BVH-2000PS
BVH-2180PS
(00/10/02/12 MODEL)

BVH-2500/P

CN350M		Q307	3C
	1F	Q308	2C
CN351M		Q309	2C
	1E	Q501	4B
CN352M		Q502	3B
	1D		
CN353M		(PS)	
	1C	Q503	3B
CN354M			
	1C	Q601	3A
CN355M		Q602	3A
	1B	Q621	2A
CN356M		Q622	2A
	1B	Q641	1A
CN357M		Q642	1A
	1A	Q701	4B
CN360M			
	4F	RY101	4F
CN361M		RY201	4E
	4E	RY301	4C
CN363M		RY501	4B
	4C		
CN364M		TP101	2F
	4B	TP102	1F
		TP103	4F
D101	4F	TP201	2E
D201	4E	TP202	1E
D301	4C	TP203	4E
D501	4B	TP301	2C
D502	3B	TP302	1C
D503	3B	TP303	4C
		TP501	4B
(PS)			
D504	3B	TPE101	
			2F
D505	4B	TPE102	
D506	4B		1F
D507	4B	TPE201	
D701	4B		2E
		TPE202	
FB1	1C		1E
FB2	1C	TPE301	
			2C
IC101	1F	TPE302	
IC201	1E		1D
IC301	1C	TPE501	
IC501	4B		4B
IC502	3B		
IC601	4A		
IC602	3A		
IC603	2A		
IC605	2B		
LV101	2F		
LV201	2E		
LV301	2C		
Q101	3F		
Q102	4F		
Q103	4F		
Q104	3F		
Q105	3F		
Q106	3F		
Q107	3F		
Q108	2F		
Q109	2F		
Q201	3E		
Q202	4E		
Q203	4E		
Q204	3E		
Q205	3E		
Q206	3E		
Q207	3E		
Q208	2E		
Q209	2E		
Q301	3C		
Q302	4C		
Q303	4C		
Q304	3C		
Q305	3C		
Q306	3C		

AP-12 (1-614-366-11 & UP)

BVH-2000PS
BVH-2180PS
(04/14 MODEL)

CN350M		Q306	3C
	1F	Q307	3C
CN351M		Q308	2C
	1E	Q309	2C
CN352M		Q401	3D
	1D	Q402	4D
CN353M		Q403	4D
	1C	Q404	3D
CN354M		Q405	3D
	1C	Q406	3D
CN355M		Q407	3D
	1B	Q408	2D
CN356M		Q409	2D
	1B	Q501	4B
CN357M		Q502	3B
	1A	Q503	3B
CN360M		Q601	3A
	4F	Q602	3A
CN361M		Q621	2A
	4E	Q622	2A
CN362M		Q641	1A
	4D	Q642	1A
CN365N		Q661	1B
	4A	Q662	1B
CN363M		Q701	4B
	4C		
CN364M		RY101	4F
	4B	RY201	4E
		RY301	4C
D101	4F	RY401	4D
D201	4E	RY501	4B
D301	4C		
D401	4D	TP101	2F
D501	4B	TP102	1F
D502	3B	TP103	4F
D503	3B	TP201	2E
D504	3B	TP202	1E
D505	4B	TP203	4E
D506	4B	TP301	2C
D701	4B	TP302	1C
		TP303	4C
FB1	1C	TP401	2D
FB2	1C	TP402	1D
		TP403	4D
IC101	1F	TP501	4B
IC201	1E		
IC301	1C	TPE101	
IC401	1D		2F
IC501	4B	TPE102	
IC502	3B		1F
IC601	4A	TPE201	
IC602	3A		2E
IC603	2A	TPE202	
IC604	2B		1E
IC605	2B	TPE301	
			2C
LV101	2F	TPE302	
LV201	2E		1D
LV301	2C	TPE401	
LV401	2D		2D
		TPE402	
Q101	3F		1D
Q102	4F	TPE501	
Q103	4F		4B
Q104	3F		
Q105	3F		
Q106	3F		
Q107	3F		
Q108	2F		
Q109	2F		
Q201	3E		
Q202	4E		
Q203	4E		
Q204	3E		
Q205	3E		
Q206	3E		
Q207	3E		
Q208	2E		
Q209	2E		
Q301	3C		
Q302	4C		
Q303	4C		
Q304	3C		
Q305	3C		

AP-12 BOARD

Audio/CTL, REC/PB Preamplifier

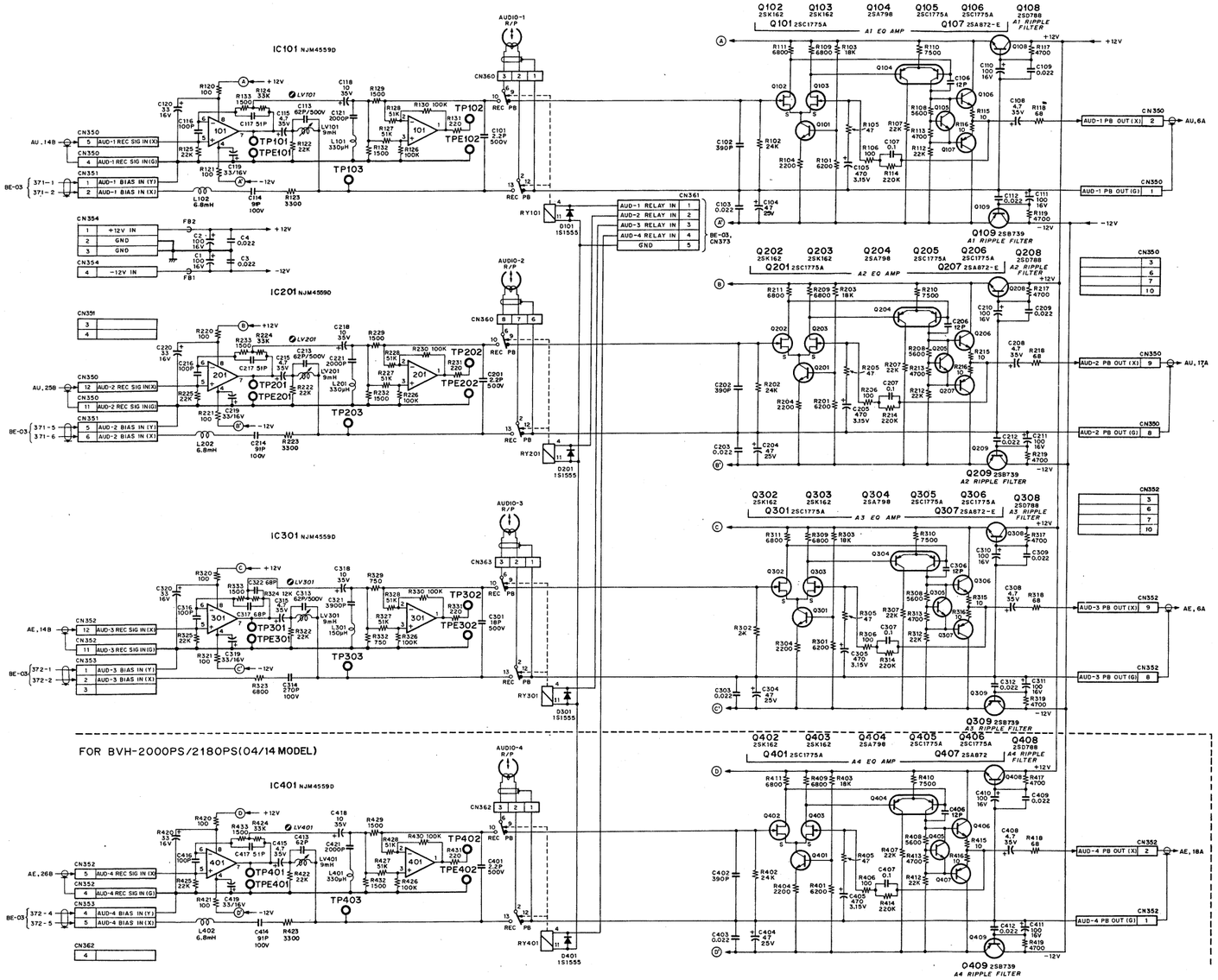

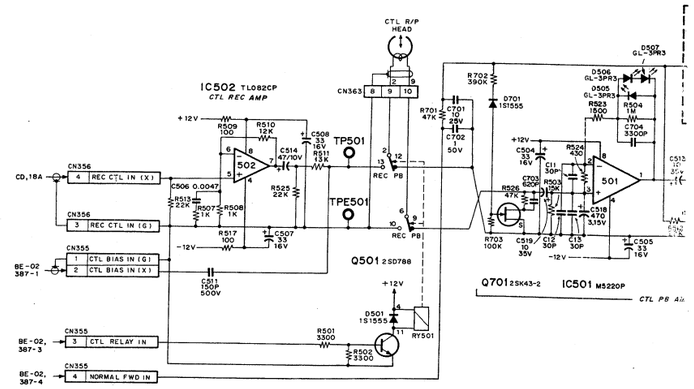

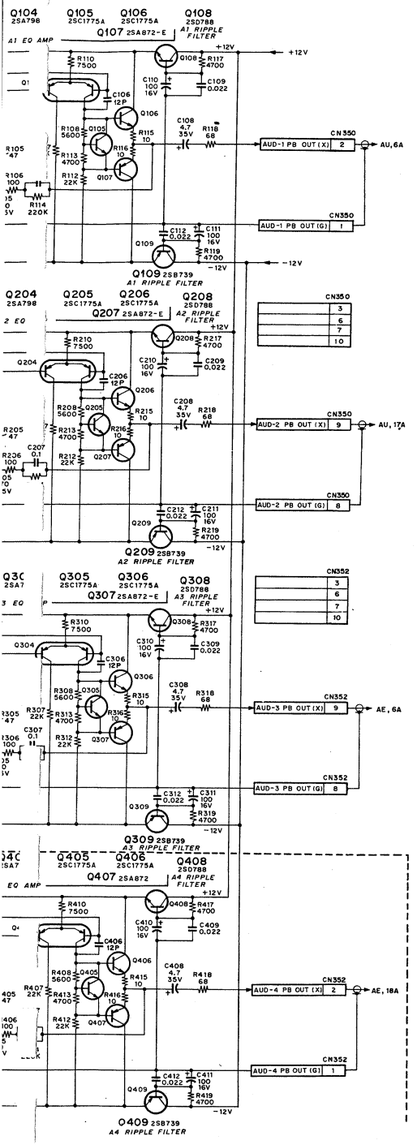

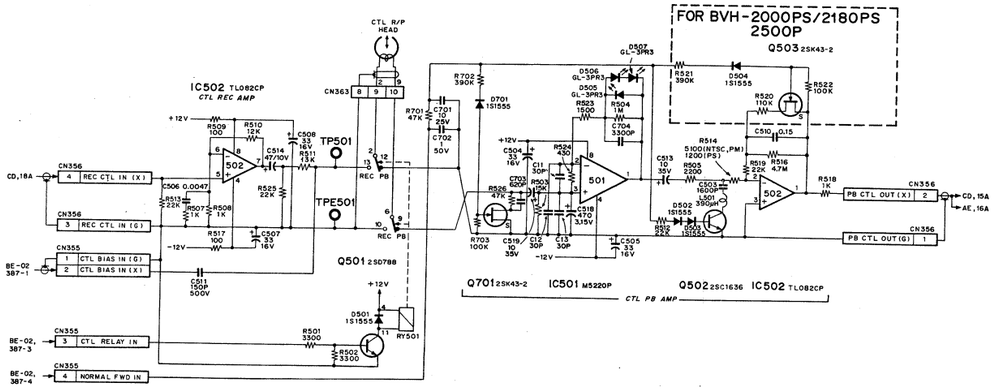

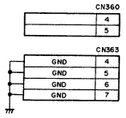

AP-12 BOARD

BOARD NO.1-614-366-11 & UP

BVH-2000(J);	#33301-	BVH-2180(J);	#10001-
BVH-2000(U/C);	#33501-	BVH-2180(U/C);	#10001-
BVH-2000PS;	#33401-	BVH-2180PS;	#10001-
BVH-2000PM;	#30201-	BVH-2180PM;	#10001-
BVH-2500(J);	#11001-		
BVH-2500(U/C);	#11501-		
BVH-2500P;	#10701-		

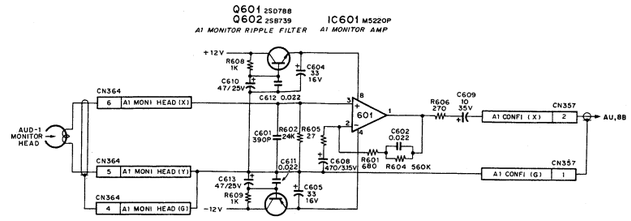

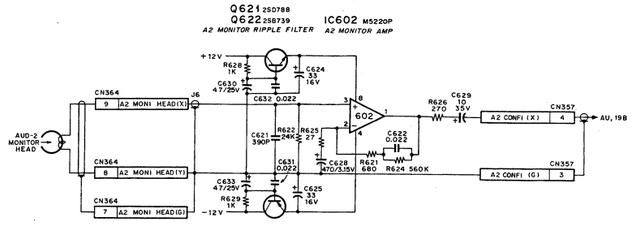

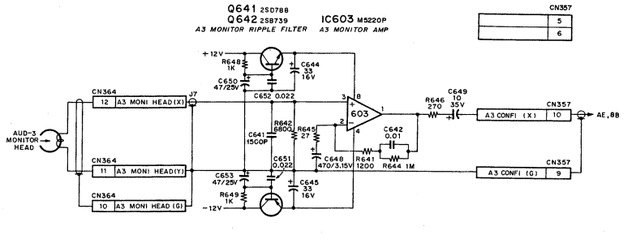

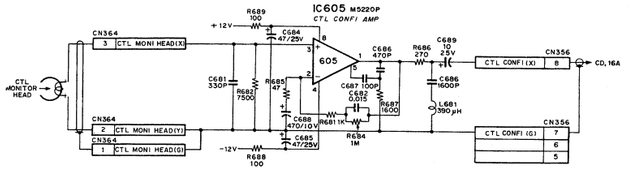

FOR BVH-2000PS (04/14 MODEL)
FOR BVH-2180PS (04 MODEL)

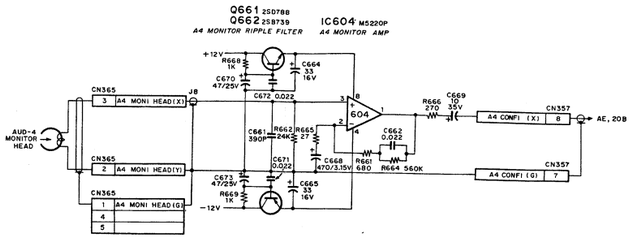

BE-02 BOARD (1-606-674-14, 15)

Component Side

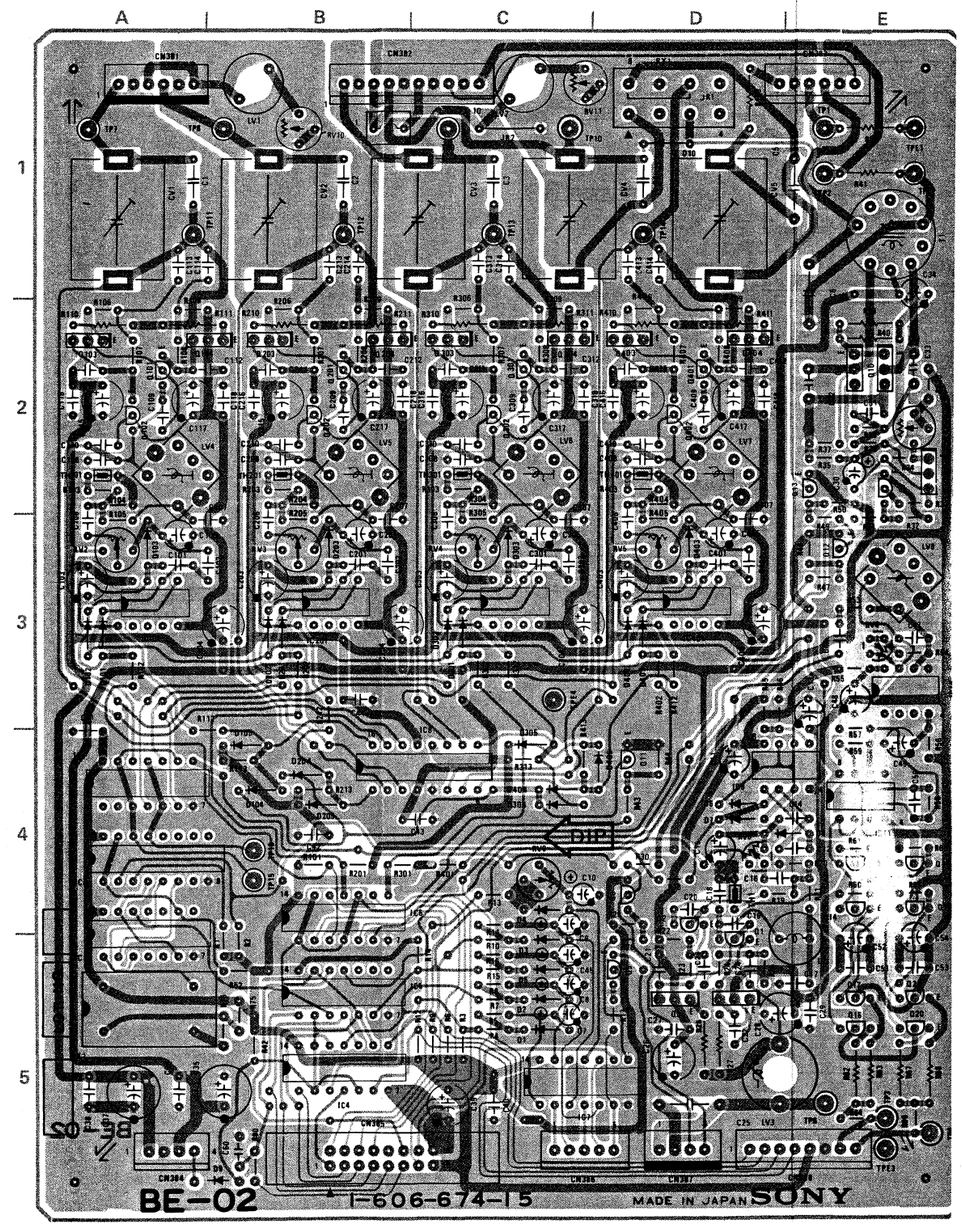

■ 1-606-674-15
COMPONENT SIDE

■ 1-606-674-15
SOLDER SID

BE-02 BOARD (1-606-674-14, 15)

Component Side

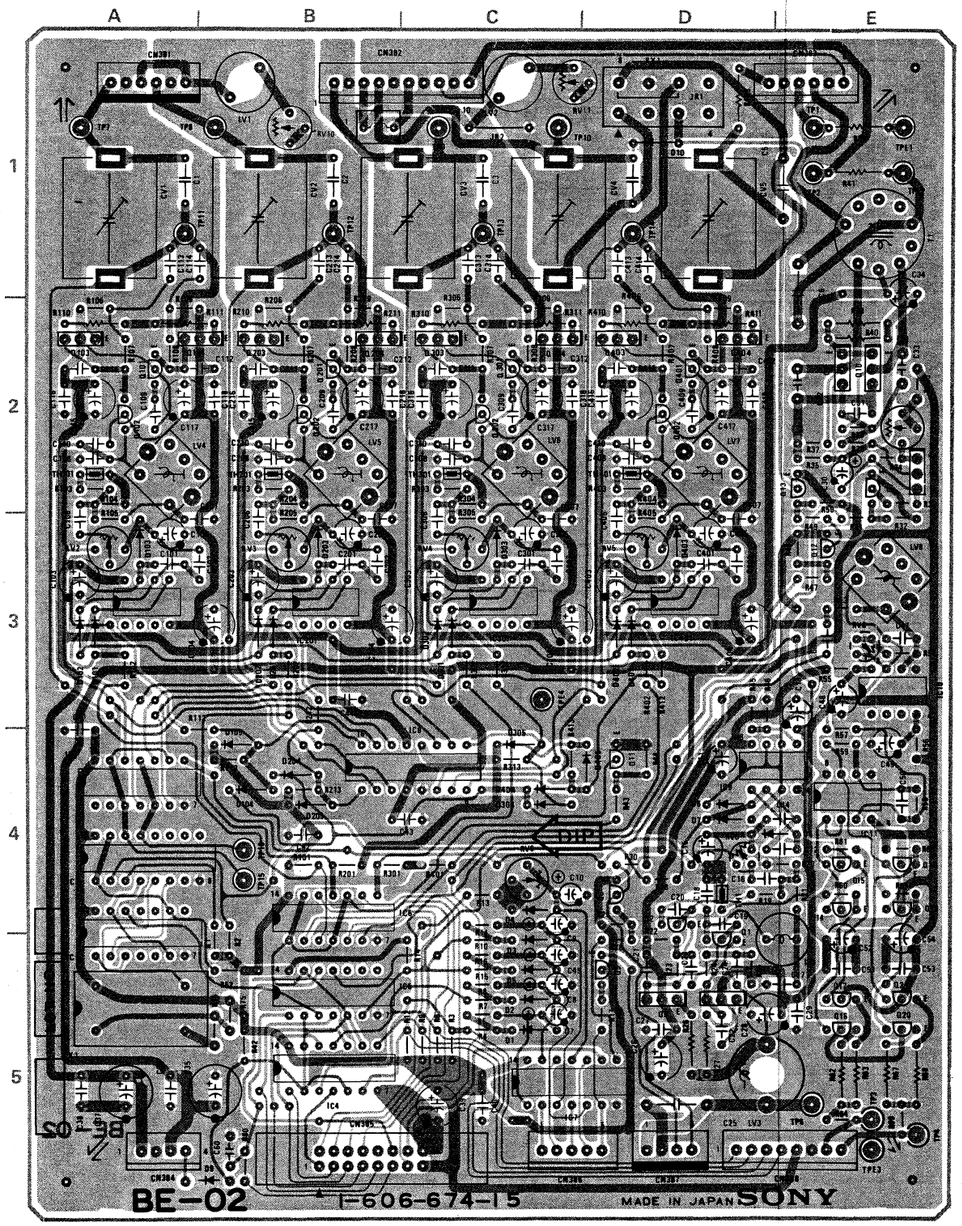

■ 1-606-674-15
COMPONENT SIDE

■ 1-606-674-15
SOLDER SIDE

BE-02 (1-606-674-14 & UP)

BVH-2000/PS/PM
BVH-2180/PS/PM
BVH-2500/P

CN381M		Q6	4D
	1A	Q7	2E
CN382M		Q8	2E
	1C	Q9	2E
CN383M		Q10	2E
	1E	Q11	4D
CN384M			
	5A	(PS 04 MODEL)	
CN385M		Q12	3E
	5B	Q13	2E
CN386M			
	5D	Q14	4E
CN387M		Q15	4E
	5D	Q16	5E
CN388M		Q17	5E
	5E	Q18	4E
		Q19	4E
CV1	1A	Q20	5E
CV2	1B	Q21	5E
CV3	1C	Q101	2A
		Q102	2A
(PS 04 MODEL)		Q103	2A
CV4	1C	Q104	2B
		Q201	2B
CV5	1D	Q202	2B
		Q203	2B
D1	5C	Q204	2B
D2	5C	Q301	2C
D3	5C	Q302	2C
D4	4C	Q303	2C
D5	5C	Q304	2C
D6	4D	Q401	2D
D7	4D	Q402	2D
D8	4E	Q403	2D
D9	5B	Q404	2D
D10	1D		
D101	3A	RV1	2E
D102	3A	RV2	3A
D103	3A	RV3	3B
D104	4B	RV4	3C
D105	4B	RV5	3D
D201	3B	RV6	4D
D202	3B	RV8	3E
D203	3B	RV9	4C
D204	4B	RV10	1B
D205	4B		
D301	3C	(PS 04 MODEL)	
D302	3C	RV11	1D
D303	3C		
D304	4C	(PS 04 MODEL)	
D305	4C	RY1	1D
D401	3D		
D402	3D	T1	1E
D403	3D		
D404	4C	TH101	2A
D405	4D	TH201	2B
		TH301	2C
IC1	5A	TH401	2D
IC2	4A		
IC3	4A	TP1	1E
IC4	5B	TP2	1E
IC5	5B	TP3	5E
IC6	4B	TP4	5E
IC7	5D	TP6	5E
IC8	4C	TP7	1A
IC9	4D	TP8	1B
IC10	3E	TP9	1C
IC11	4E		
IC101	3A	(PS 04 MODEL)	
IC201	3B	TP10	1C
IC301	3C		
IC401	3D	TP11	1A
		TP12	1B
L2	5E	TP13	1C
		TP14	1D
LV1	1B	TP15	4B
		TP16	4B
(PS 04 MODEL)			
LV2	1C	TPE1	1E
		TPE2	1E
LV3	5D	TPE3	5E
LV4	2A	TPE4	3C
LV5	2B		
LV6	2C	X1	5A
LV7	2D		
LV8	3E		
Q1	5D		
Q2	5D		
Q3	5D		
Q4	5D		
Q5	5D		

BE-02 BOARD

Audio Bias/Erase Oscillator

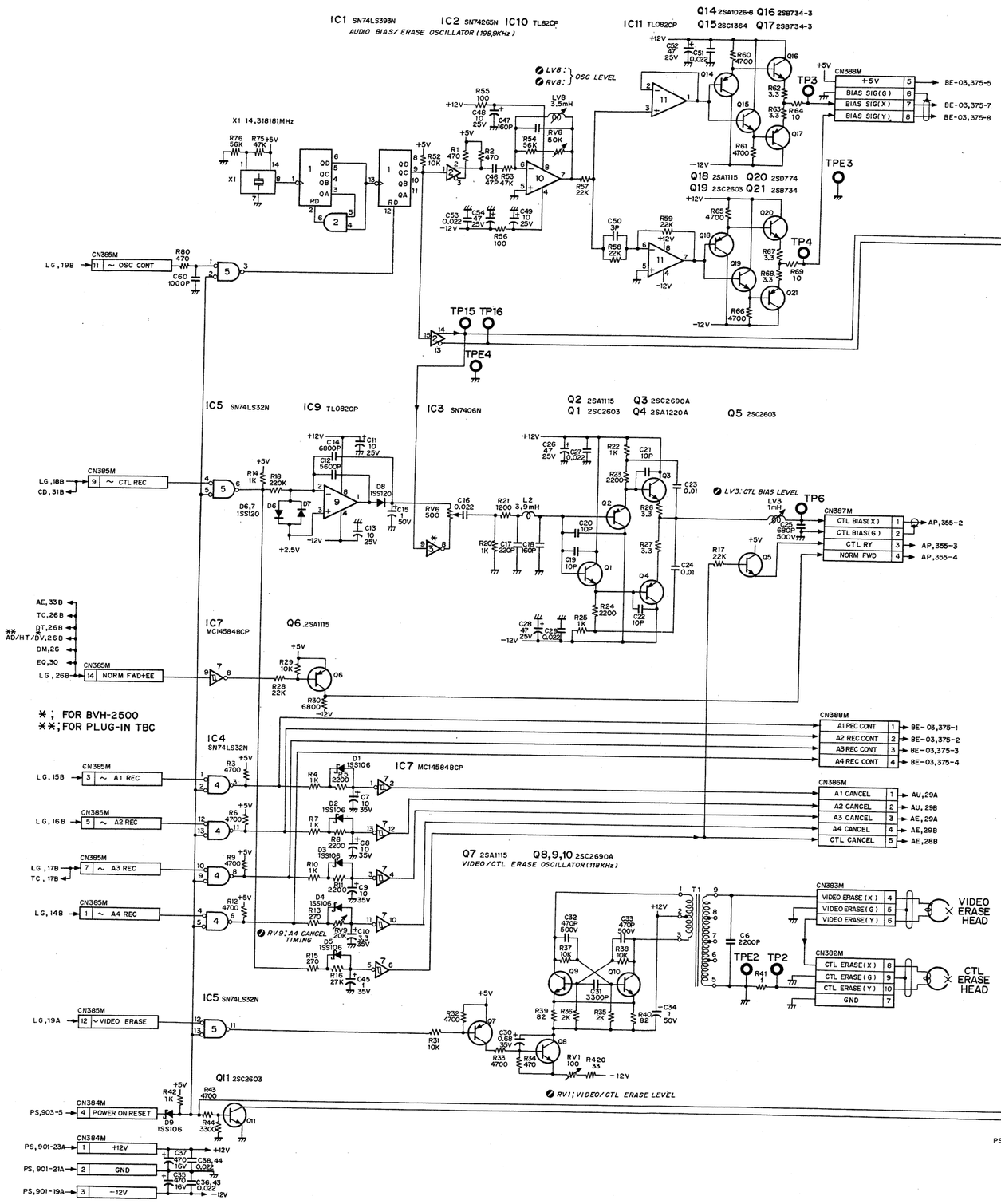

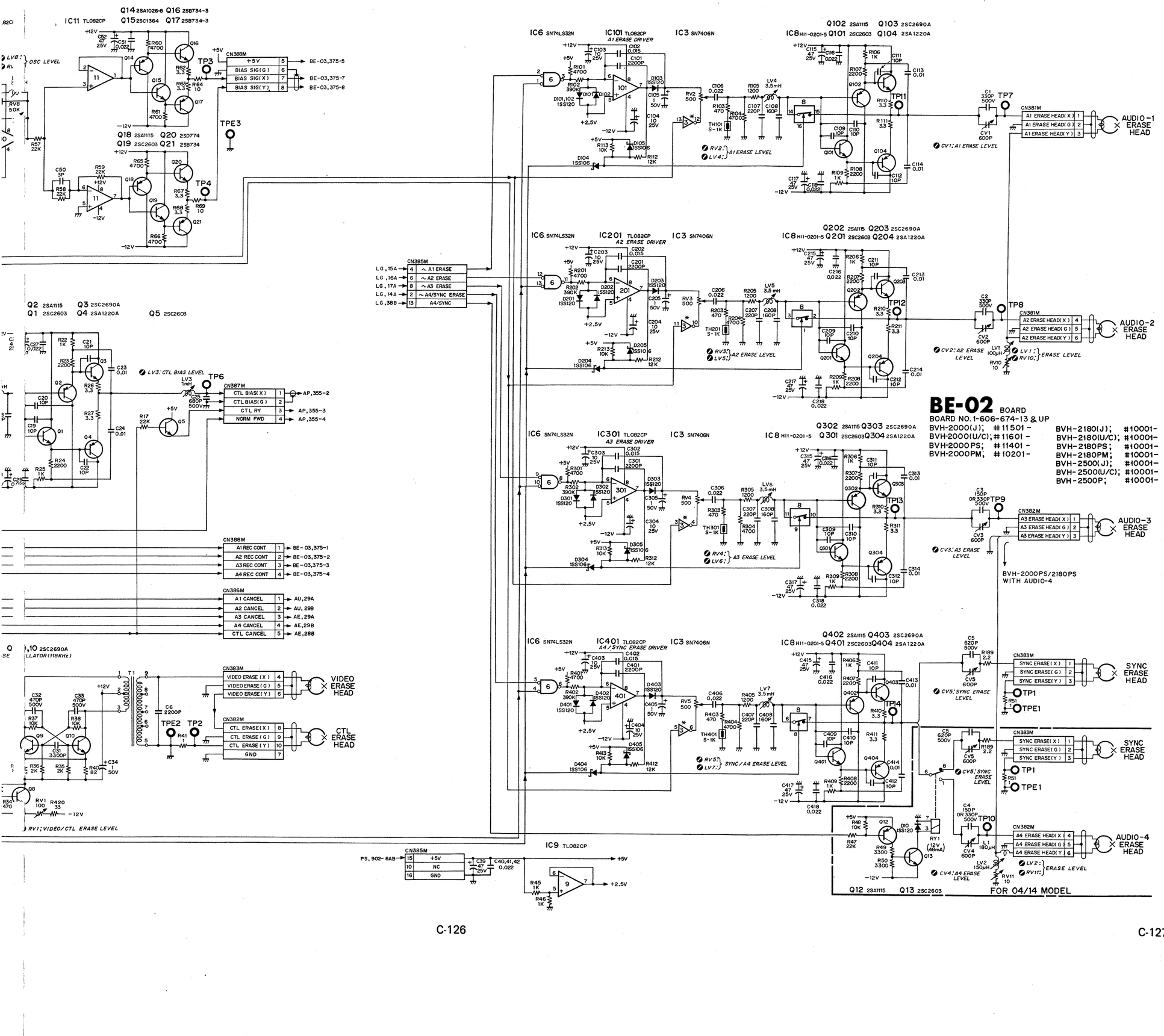

BE-02 BOARD

BOARD NO. 1-606-674-13 & UP

BVH-2000(J);	#11501 -
BVH-2000(U/C);	#11601 -
BVH-2000PS;	#11401 -
BVH-2000PM;	#10201-

BVH-2180(J);	#10001-
BVH-2180(U/C);	#10001-
BVH-2180PS;	#10001-
BVH-2180PM;	#10001-
BVH-2500(J);	#10001-
BVH-2500(U/C);	#10001-
BVH-2500P;	#10001-

BE-03

Co

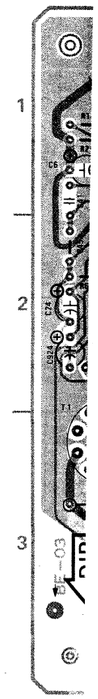

BE-04

Cc

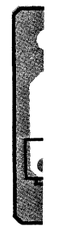

BE-03, BE-04 TAPE TRANSPORT

BE-03 BOARD (1-606-675-12, 13)

Component Side

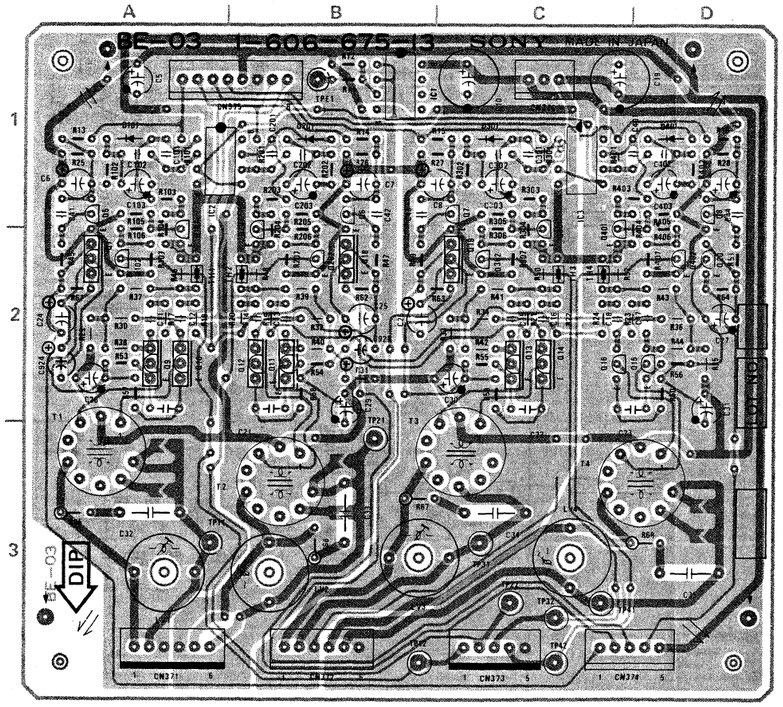

BE-03 (1-606-675-12 & UP)

BVH-2800/PS/PM
BVH-2830/PS/PM
BVH-2500P

CN371M	3A	Q17	2A
CN372M	3B	Q18	2B
CN373M	3C	Q19	2C
CN374M	3D	(PS 04 MODEL) Q20	2D
CN375M	1A	Q101	1A
CN376M	1C	Q102	2A
D101	1A	Q201	1B
D201	1B	Q202	2B
D301	1C	Q301	1C
(PS 04 MODEL) D401	1D	Q302	2C
IC1	1B	(PS 04 MODEL) Q401	1D
IC2	1A	Q402	2D
IC3	1C	TH1	2A
LV1	3A	TH2	2B
LV2	3B	TH3	2C
LV3	3C	(PS 04 MODEL) TH4	2C
(PS 04 MODEL) LV4	3C	TP11	3A
Q5	1A	TP12	3B
Q6	1B	TP21	3B
Q7	1C	TP22	3C
(PS 04 MODEL) Q8	1D	TP31	3C
Q9	2A	TP32	3C
Q10	2A	(PS 04 MODEL) TP41	3C
Q11	2B	TP42	3C
Q12	2B	TPE1	1B
Q13	2C		
Q14	2C		
(PS 04 MODEL) Q15	2D		
Q16	2C		

■ 1-606-675-13

BE-04 BOARD (1-606-676-12)

Component Side

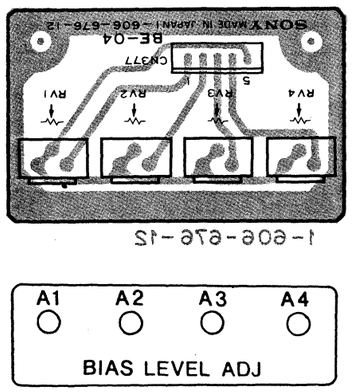

BE-03/BE-04 BOARD

Audio Bias Amplifier
Audio Bias Level Adj.

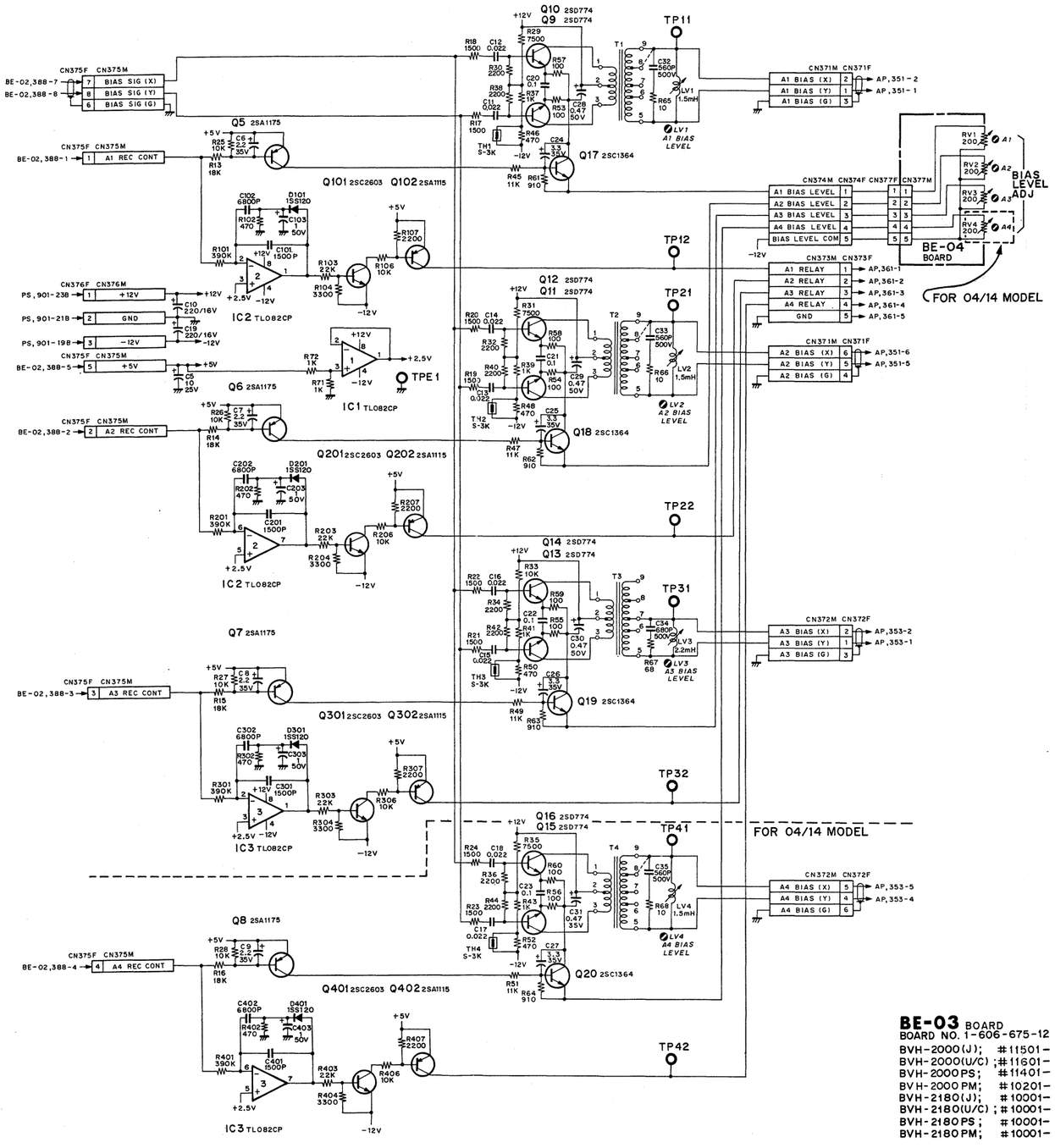

BE-03 BOARD
BOARD NO. 1-606-675-12 & UP

BVH-2000(J);	#11501-	BVH-2500(J);	#10001-
BVH-2000(U/C);	#11601-	BVH-2500(U/C);	#10001-
BVH-2000PS;	#11401-	BVH-2500P;	#10001-
BVH-2000PM;	#10201-		
BVH-2180(J);	#10001-		
BVH-2180(U/C);	#10001-		
BVH-2180PS;	#10001-		
BVH-2180PM;	#10001-		

HEAD DRUM (FOR 02/12/04/14) DR-13/14/15, SL-07/08/09 TAPE TRANSPORT

DR-13 BOARD (1-606-663-11)
Component Side

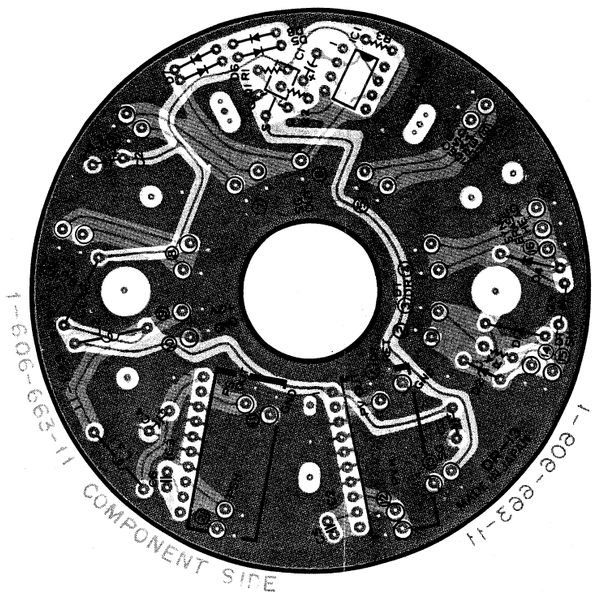

DR-14 BOARD (1-606-664-12)
Solder Side

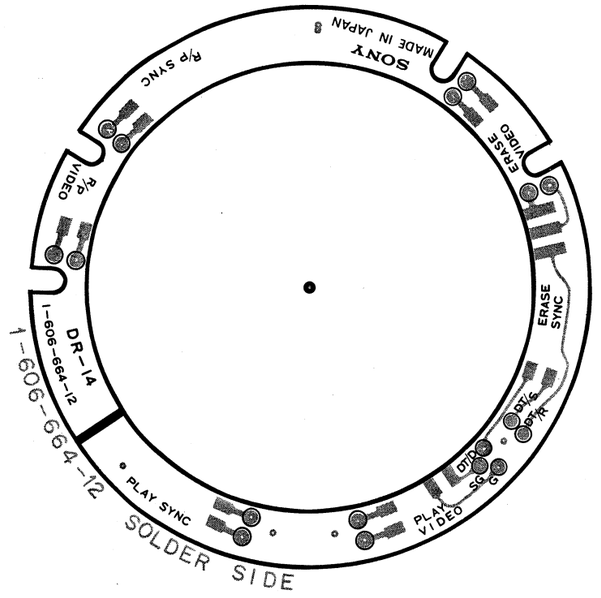

SL-07 BOARD (1-606-667-14)
Component Side

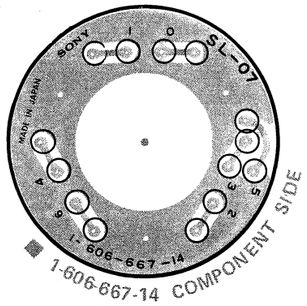

SL-08 BOARD (1-606-668-12)
Solder Side

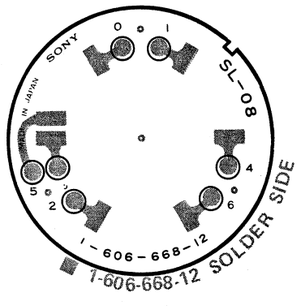

SL-09 BOARD (1-606-669-16)
Component Side

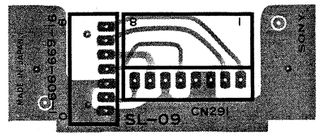

■ 1-606-669-16
COMPONENT SIDE
■ 1-606-669-16
SOLDER SIDE

DR-15 BOARD (1-606-665-13)
Solder Side

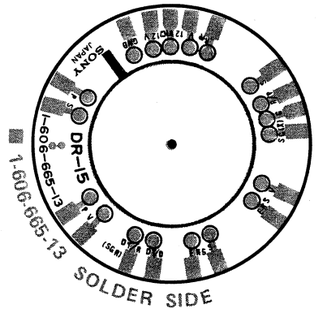

HEAD DRUM (FOR 02/04) DR-13/14/15, SL-07/08/09 TAPE TRANSPORT

HEAD DRUM ; FOR 02/04 MODEL

DR-13 BOARD: Video/Sync PB Amplifier
DR-14 BOARD: Rotary Head Relaying
DR-15 BOARD: Rotary Head Relaying
DR-16 BOARD: Rotary Head Relaying
SL-07 BOARD: Slip Ring Relaying
SL-08 BOARD: Slip Ring Relaying
SL-09 BOARD: Slip Ring Relaying

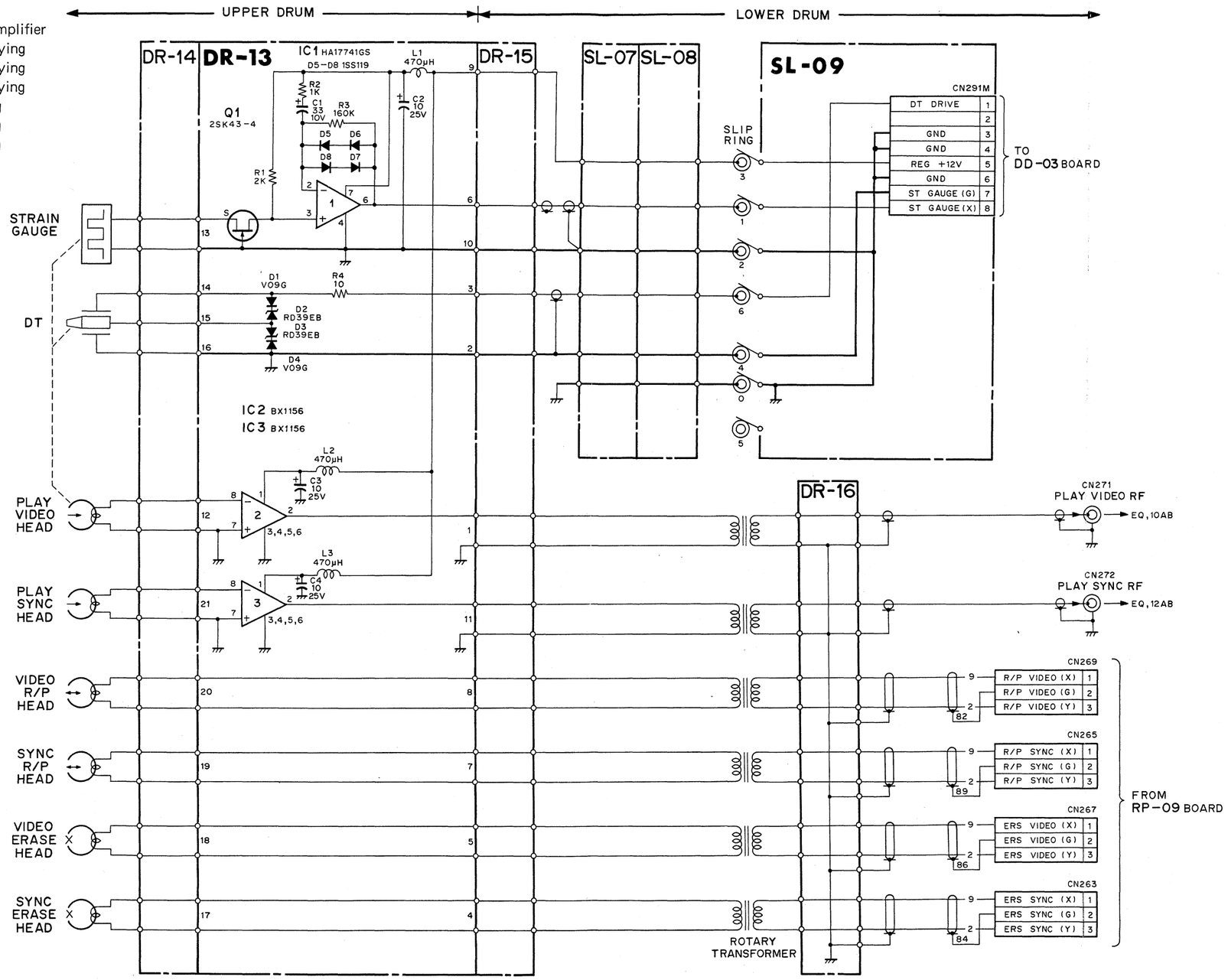

HEAD DRUM ASSY;	DMH-17A-R (FOR NTSC, PM 02 MODEL) DMH-18A-R (FOR PS 02/04 MODEL)
UPPER DRUM ASSY;	DMR-17-R (FOR NTSC, PM 02 MODEL) DMR-18-R (FOR PS 02/04 MODEL)
LOWER DRUM ASSY;	DML-17A-R

HEAD DRUM (FOR 02/04)

BVH-2000(J);	#10001-	BVH-2180(J);	#10001-
BVH-2000(U/C);	#10001-	BVH-2180(U/C);	#10001-
BVH-2000PS;	#10001-	BVH-2180PS;	#10001-
BVH-2000PM;	#10001-	BVH-2180PM;	#10001-

HEAD DRUM (FOR 12/14) DR-13/14/15, SL-07/08/09 TAPE TRANSPORT

HEAD DRUM; FOR 12/14 MODEL

DR-13 BOARD: Video/Sync PB Amplifier
DR-14 BOARD: Rotary Head Relaying
DR-15 BOARD: Rotary Head Relaying
DR-16 BOARD: Rotary Head Relaying
SL-07 BOARD: Slip Ring Relaying
SL-08 BOARD: Slip Ring Relaying
SL-09 BOARD: Slip Ring Relaying

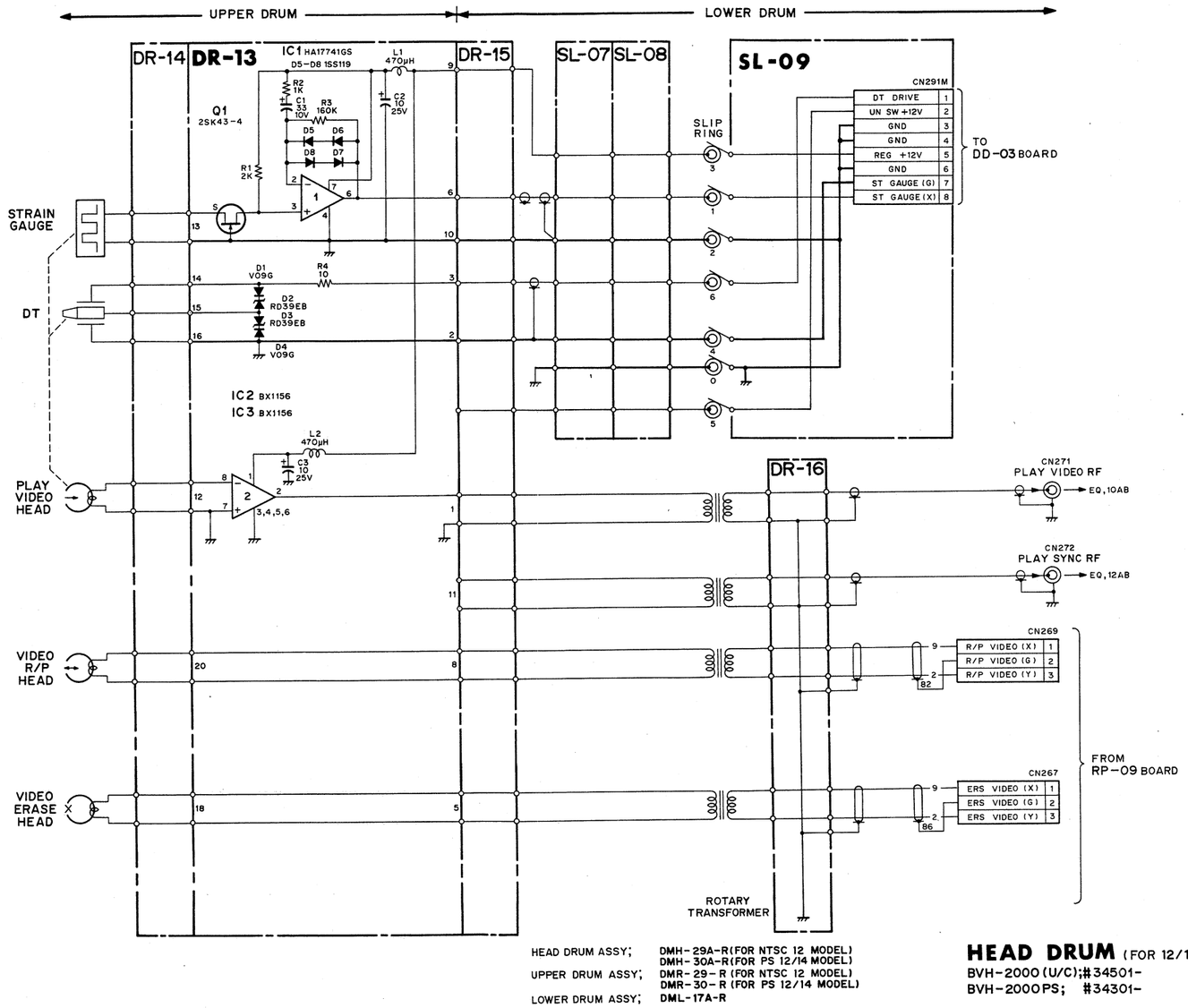

HEAD DRUM ASSY; DMH-29A-R(FOR NTSC 12 MODEL)
DMH-30A-R(FOR PS 12/14 MODEL)
UPPER DRUM ASSY; DMR-29-R (FOR NTSC 12 MODEL)
DMR-30-R (FOR PS 12/14 MODEL)
LOWER DRUM ASSY; DML-17A-R

HEAD DRUM (FOR 12/14)
BVH-2000(U/C);#34501-
BVH-2000PS; #34301-

HEAD DRUM **(FOR 00/10)** DR-14/15/20 TAPE TRANSPORT

DR-14 **BOARD (1-606-664-12)**

Solder Side

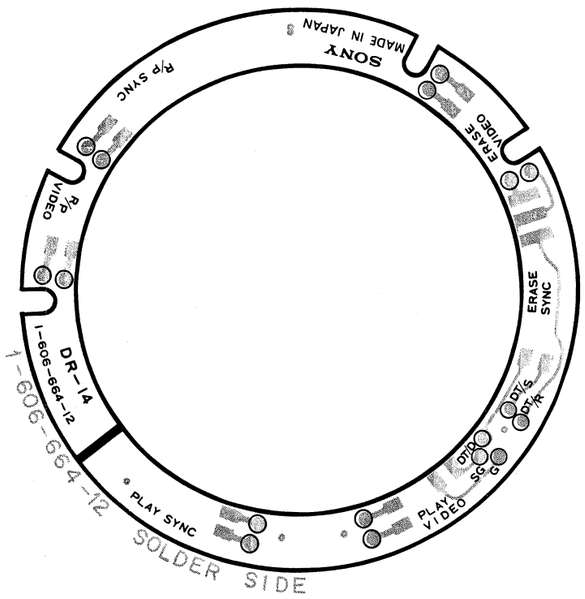

DR-15 **BOARD (1-606-665-12)**

Solder Side

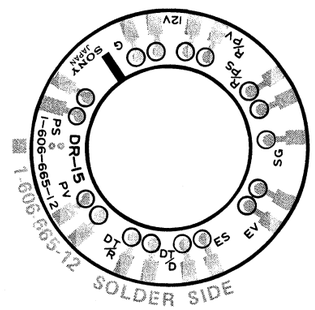

DR-20 **BOARD (1-608-099-11)**

Component Side

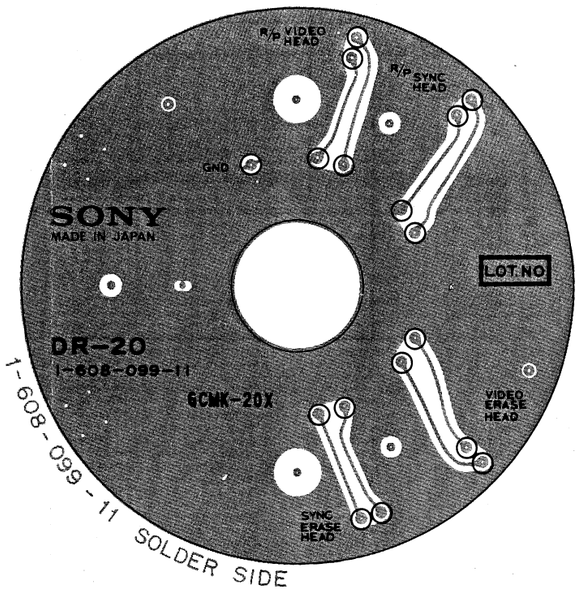

HEAD DRUM **(FOR 00)** DR-14/15/20 TAPE TRANSPORT

HEAD DRUM; FOR 00 MODEL

DR-14 BOARD: Rotary Head Relaying
DR-15 BOARD: Rotary Head Relaying
DR-20 BOARD: Rotary Head Relaying

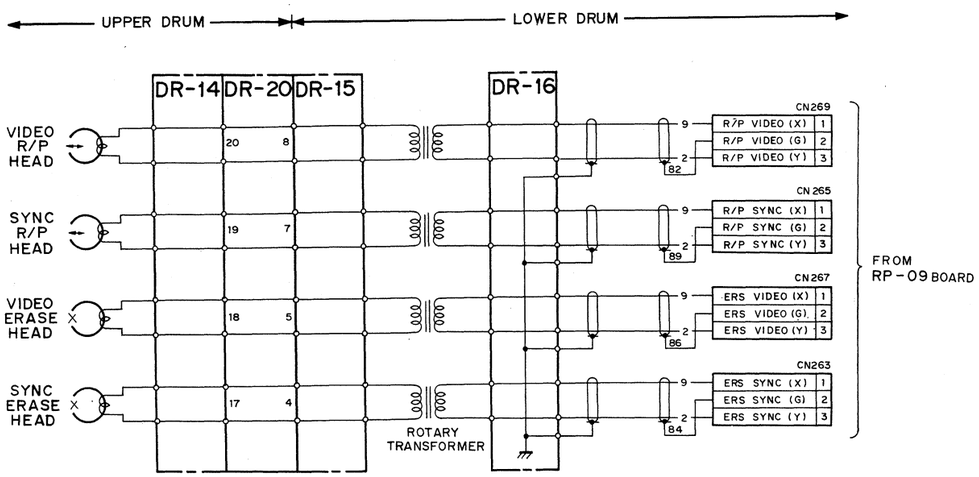

HEAD DRUM ASSY;	DMH-19A-R(FOR NTSC,PM 00 MODEL) DMH-20A-R(FOR PS,00 MODEL)
UPPER DRUM ASSY;	DMR-19-R (FOR NTSC,PM 00 MODEL) DMR-20-R (FOR PS 00 MODEL)
LOWER DRUM ASSY;	DML-19A-R

HEAD DRUM (FOR 00 MODEL)

BVH-2000(J); #10001-
BVH-2000(U/C); #10001-
BVH-2000PS; #10001-

HEAD DRUM (FOR 10) DR-14/15/20 TAPE TRANSPORT

HEAD DRUM; FOR 10 MODEL
DR-14 BOARD: Rotary Head Relaying
DR-15 BOARD: Rotary Head Relaying
DR-20 BOARD: Rotary Head Relaying

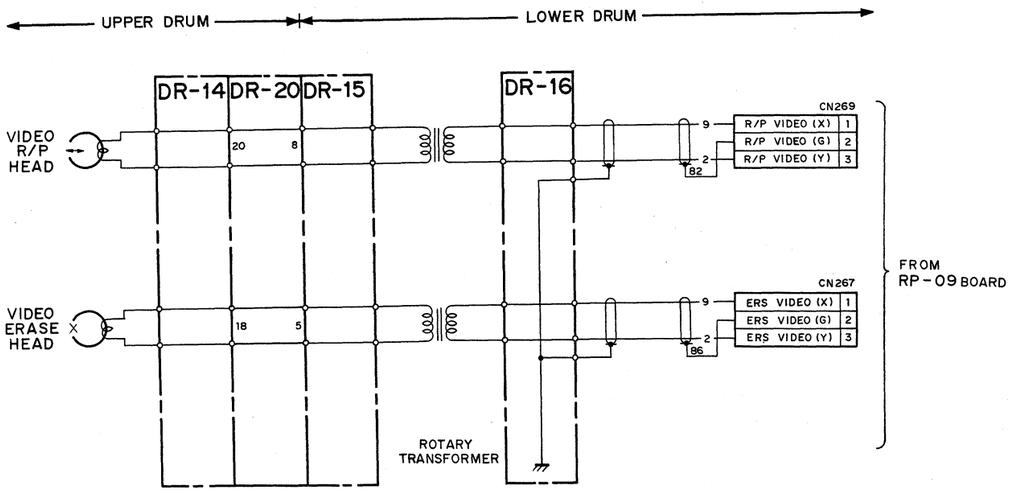

HEAD DRUM ASSY;	DMH-31A-R (FOR NTSC 10 MODEL) DMH-32A-R (FOR PS 10 MODEL)
UPPER DRUM ASSY;	DMR-31-R (FOR NTSC 10 MODEL) DMR-32-R (FOR PS 10 MODEL)
LOWER DRUM ASSY;	DML-19A-R

HEAD DRUM (FOR 10 MODEL)
BVH-2000(U/C); #34501 -
BVH-2000PS; #34301 -

RP-09 BOARD (1-606-662-12)

Component Side

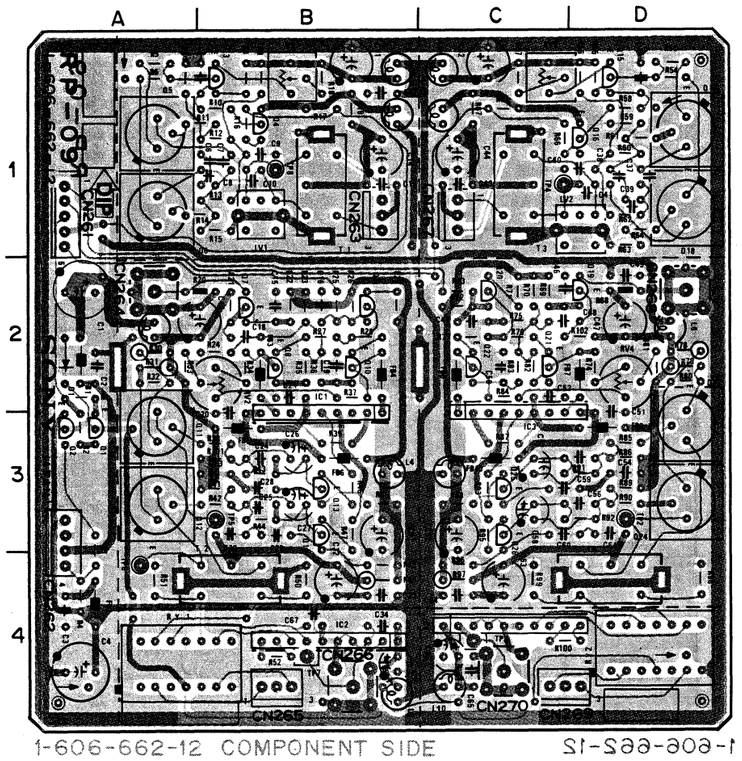

RP-09 (1-606-662-12 & UP)

BVH-2000/PS/PM
BVH-2180/PS/PM
BVH-2500/P

CN261M		RV1	1B
	1A	RV2	2B
CN262M		RV3	1C
	3A	RV4	2D
CN263M			
	1B	RY1	4A
CN264M		RY2	4D
	2A		
CN265M		TP2	3D
	4B	TP3	4C
CN266M		TP4	1C
	4B	TP5	3B
CN267M		TP6	4A
	1C	TP7	4B
CN268M		TP8	1B
	2D		
CN269M			
	4C		
CN270M			
	4C		
D1	2A		
D2	2C		
IC1	2B		
IC2	4B		
IC3	2C		
IC4	4C		
LV1	1B		
LV2	1D		
Q1	3A		
Q2	3A		
Q3	1B		
Q4	1B		
Q5	1A		
Q6	1A		
Q7	2B		
Q8	2B		
Q9	2B		
Q10	2B		
Q11	3A		
Q12	3A		
Q13	3B		
Q14	3B		
Q15	1D		
Q16	1D		
Q17	1D		
Q18	1D		
Q19	2D		
Q20	2C		
Q21	2C		
Q22	2C		
Q23	3D		
Q24	3D		
Q25	3C		
Q26	3C		

RP-09 BOARD

Video/Sync R/P Amplifier (For R/P Head)

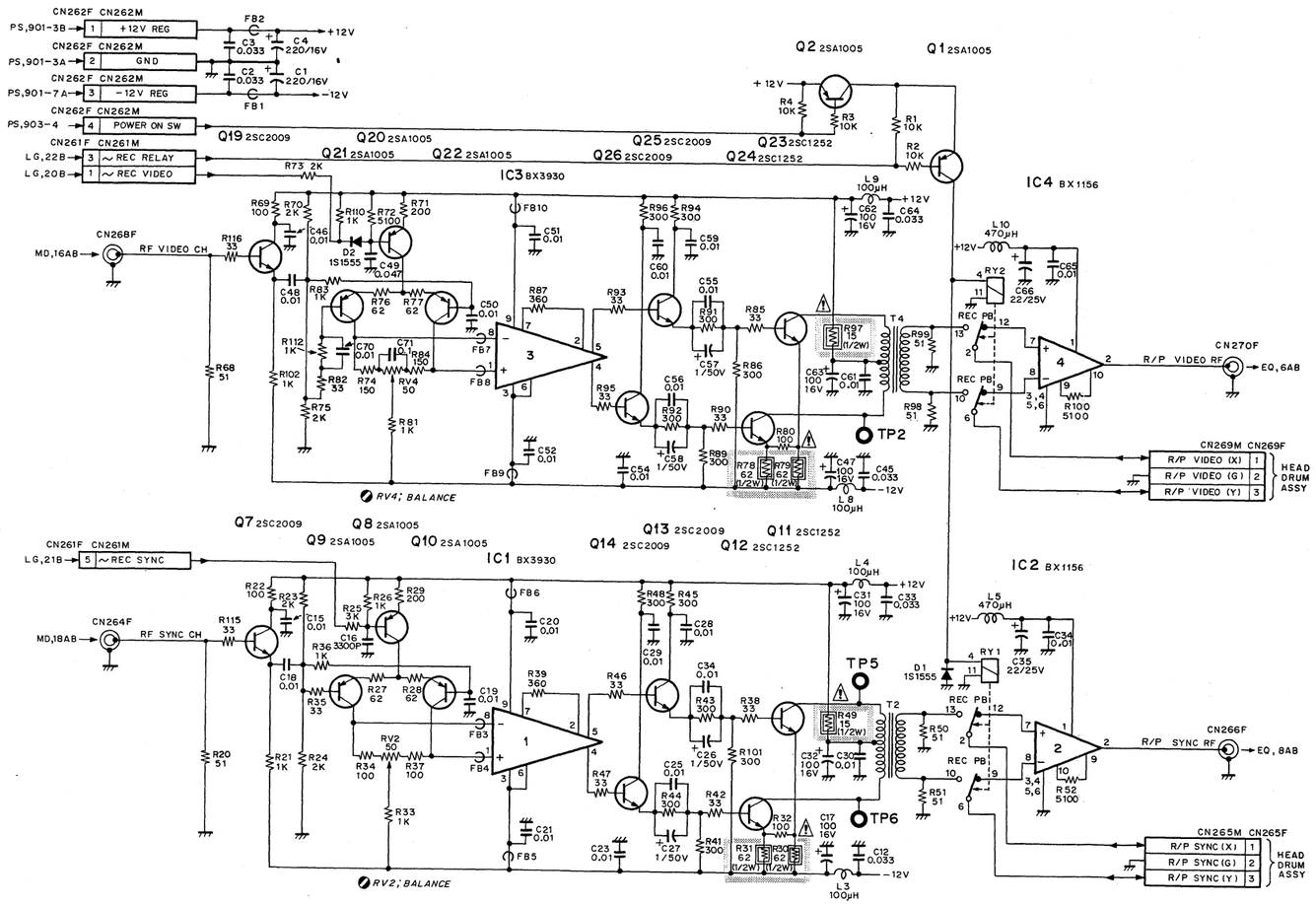

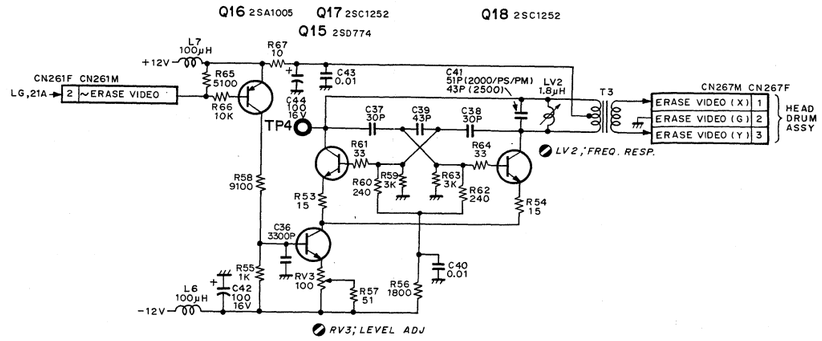

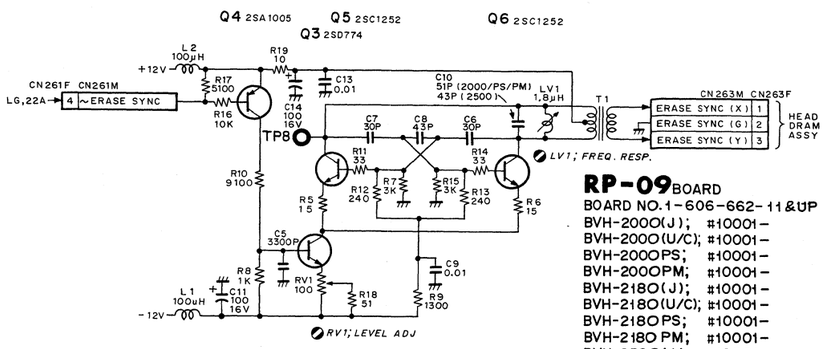

RP-09 BOARD
BOARD NO. 1-606-662-11 & UP
BVH-2000(J); #10001-
BVH-2000(U/C); #10001-
BVH-2000PS; #10001-
BVH-2000PM; #10001-
BVH-2180(J); #10001-
BVH-2180(U/C); #10001-
BVH-2180PS; #10001-
BVH-2180PM; #10001-
BVH-2500(J); #10001-
BVH-2500(U/C); #10001-
BVH-2500P; #10001-

RP-09 BOARD

Video/Sync R/P Amplifier (For R/P Head)

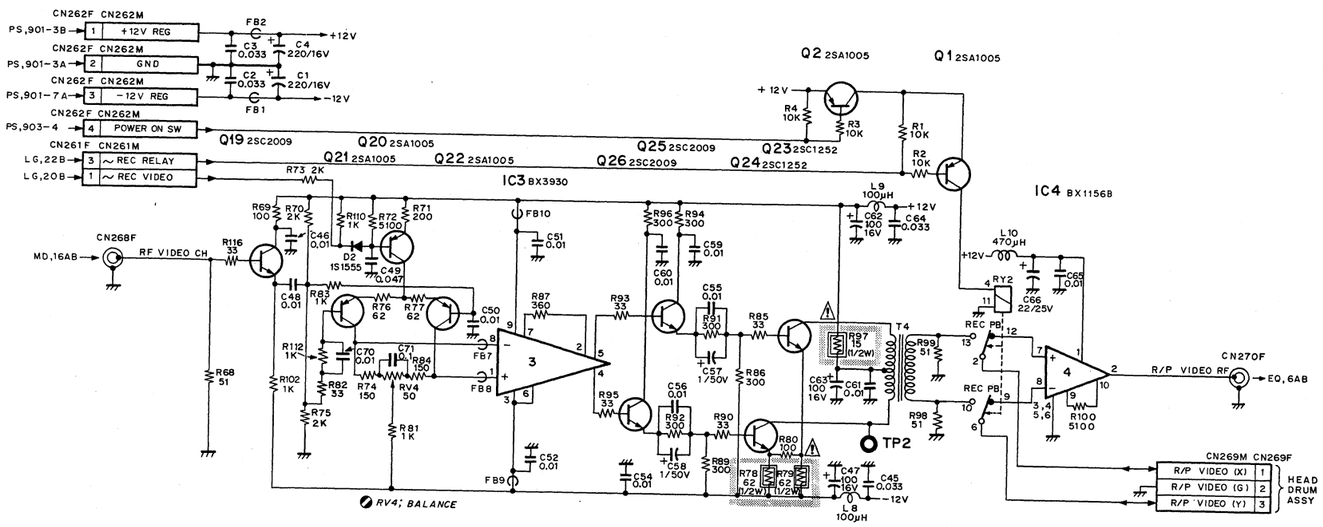

C-140(4/5)

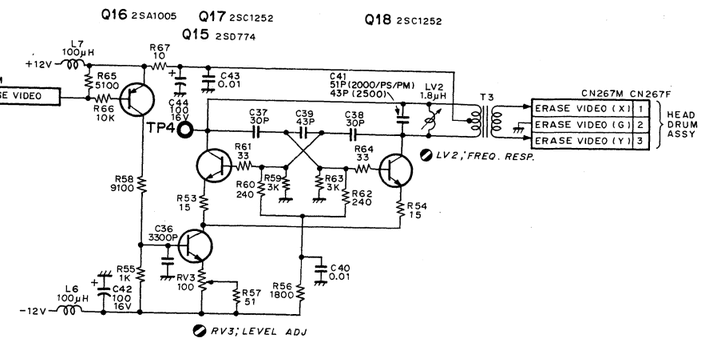

RP-09 BOARD (FOR 10/12/14)
BOARD NO.1-606-662-11&UP
BVH-2000(U/C); #34501-
BVH-2000PS; #34301-

C-140(5/5)

DD-03 TAPE TRANSPORT 1-614-265-11

DD-03 BOARD (1-614-265-11)

Component Side

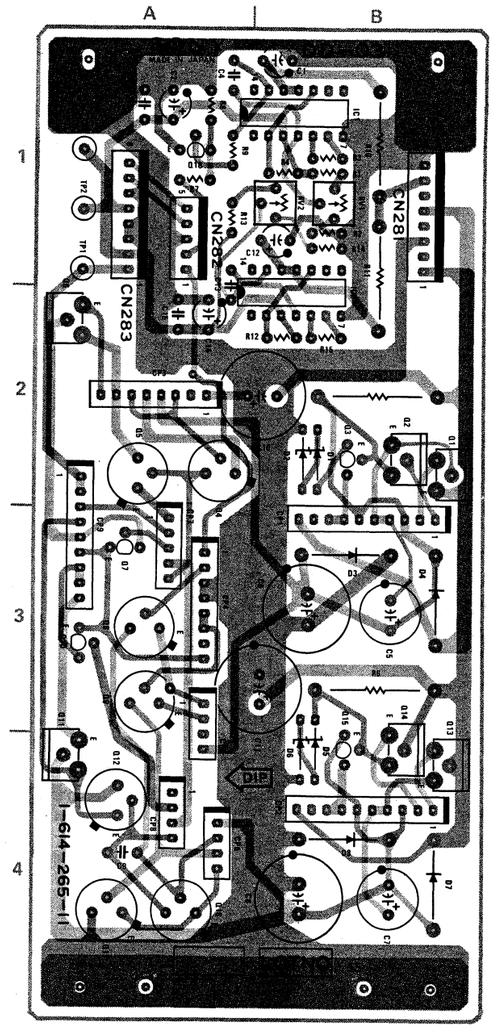

■ 1-614-265-11 COMPONENT SIDE

■ 1-614-265-11 SOLDER SIDE

DD-03 (1-614-265-11)

BVH-2000
(02/12 MODEL)

BVH-2000PS
(02/12/04/14 MODEL)

BVH-2000PM
BVH-2180/PS/PM

CN281M
1B
CN282M
1A
CN283M
1A

CP1 3B
CP2 4B
CP3 2A
CP4 3A
CP5 3A
CP6 4A
CP7 3A
CP8 4A
CP9 3A

D1 2B
D2 2B
D3 3B
D4 3B
D5 4B
D6 4B
D7 4B
D8 4B

IC1 1B
IC2 2B

Q1 2B
Q2 2B
Q3 2B
Q4 2A
Q5 2A
Q6 2A
Q7 3A
Q8 3A
Q9 3A
Q10 3A
Q11 4A
Q12 4A
Q13 4B
Q14 4B
Q15 4B
Q16 4A
Q17 4A
Q18 2A

RV1 1A
RV2 1A

TP1 1A
TP2 1A
TP3 1A

DD-03 BOARD

DT Drive

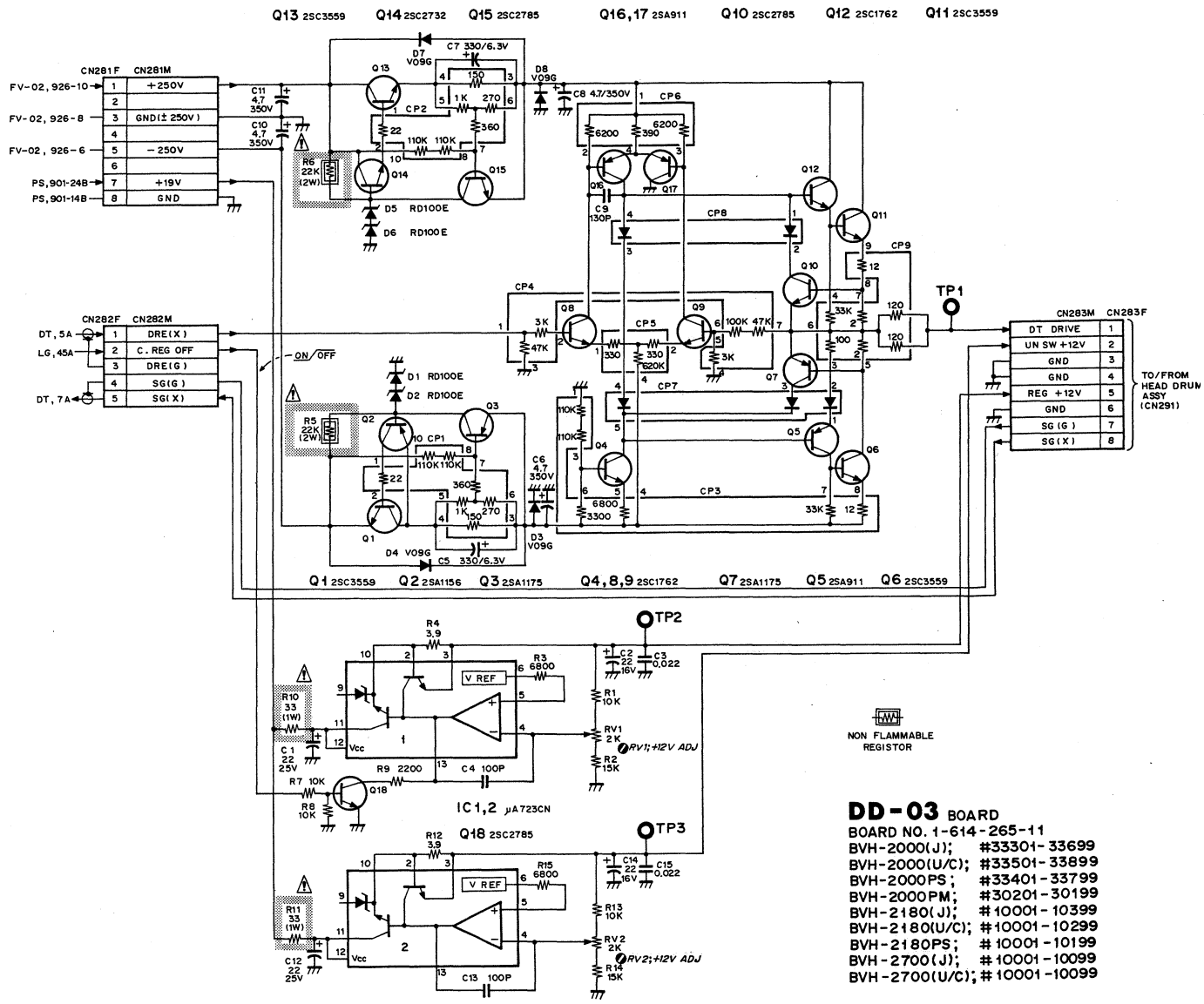

DD-03 BOARD
BOARD NO. 1-614-265-11

BVH-2000(J);	#33301-33699
BVH-2000(U/C);	#33501-33899
BVH-2000PS;	#33401-33799
BVH-2000PM;	#30201-30199
BVH-2180(J);	#10001-10399
BVH-2180(U/C);	#10001-10299
BVH-2180PS;	#10001-10199
BVH-2700(J);	#10001-10099
BVH-2700(U/C);	#10001-10099

DD-03 BOARD (1-614-265-12)

Component Side

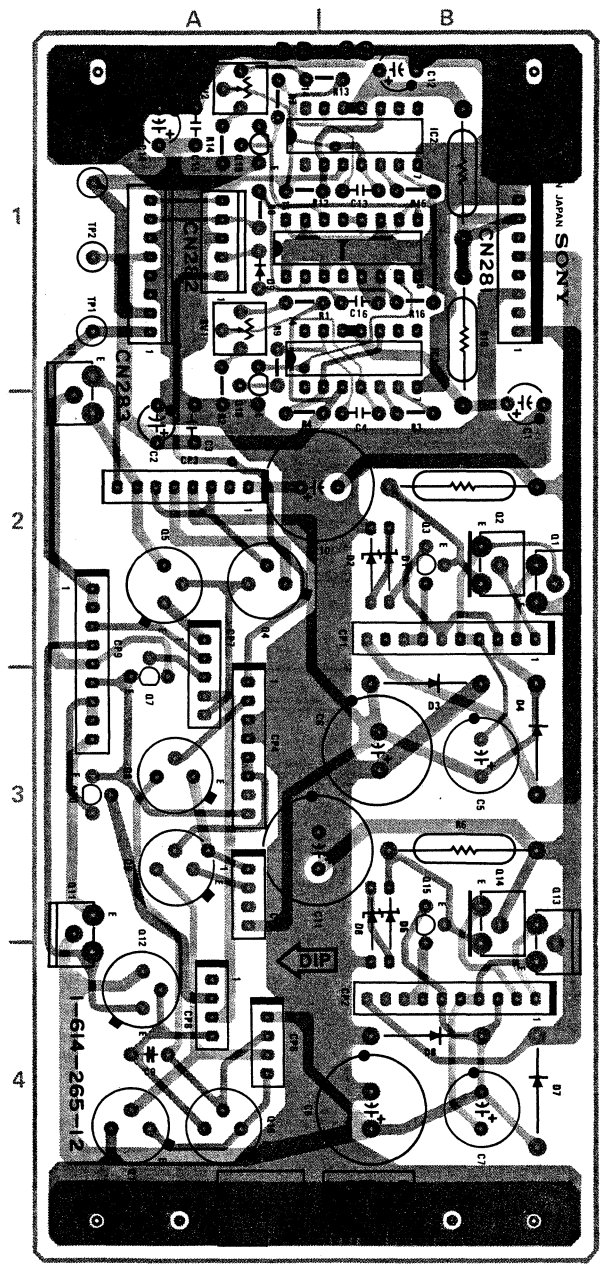

■ 1-614-265-12 COMPONENT SIDE

■ 1-614-265-12 SOLDER SIDE

DD-03 (1-614-265-12 & UP)

BVH-2000
(02 MODEL)

BVH-2000PS
(02/04 MODEL)

BVH-2000PM
BVH-2180/PS/PM
BVH-2500/P

CN281M	
	1B
CN282M	
	1A
CN283M	
	1A
CP1	3B
CP2	4B
CP3	2A
CP4	3A
CP5	3A
CP6	4A
CP7	3A
CP8	4A
CP9	3A
D1	2B
D2	2B
D3	3B
D4	3B
D5	4B
D6	4B
D7	4B
D8	4B
D9	1A
IC1	1B
IC2	2B
IC3	3B
Q1	2B
Q2	2B
Q3	2B
Q4	2A
Q5	2A
Q6	2A
Q7	3A
Q8	3A
Q9	3A
Q10	3A
Q11	4A
Q12	4A
Q13	4B
Q14	4B
Q15	4B
Q16	4A
Q17	4A
Q18	2A
Q19	1A
RV1	1A
RV2	1A
TP1	1A
TP2	1A
TP3	1A

DD-03 BOARD

DT Drive

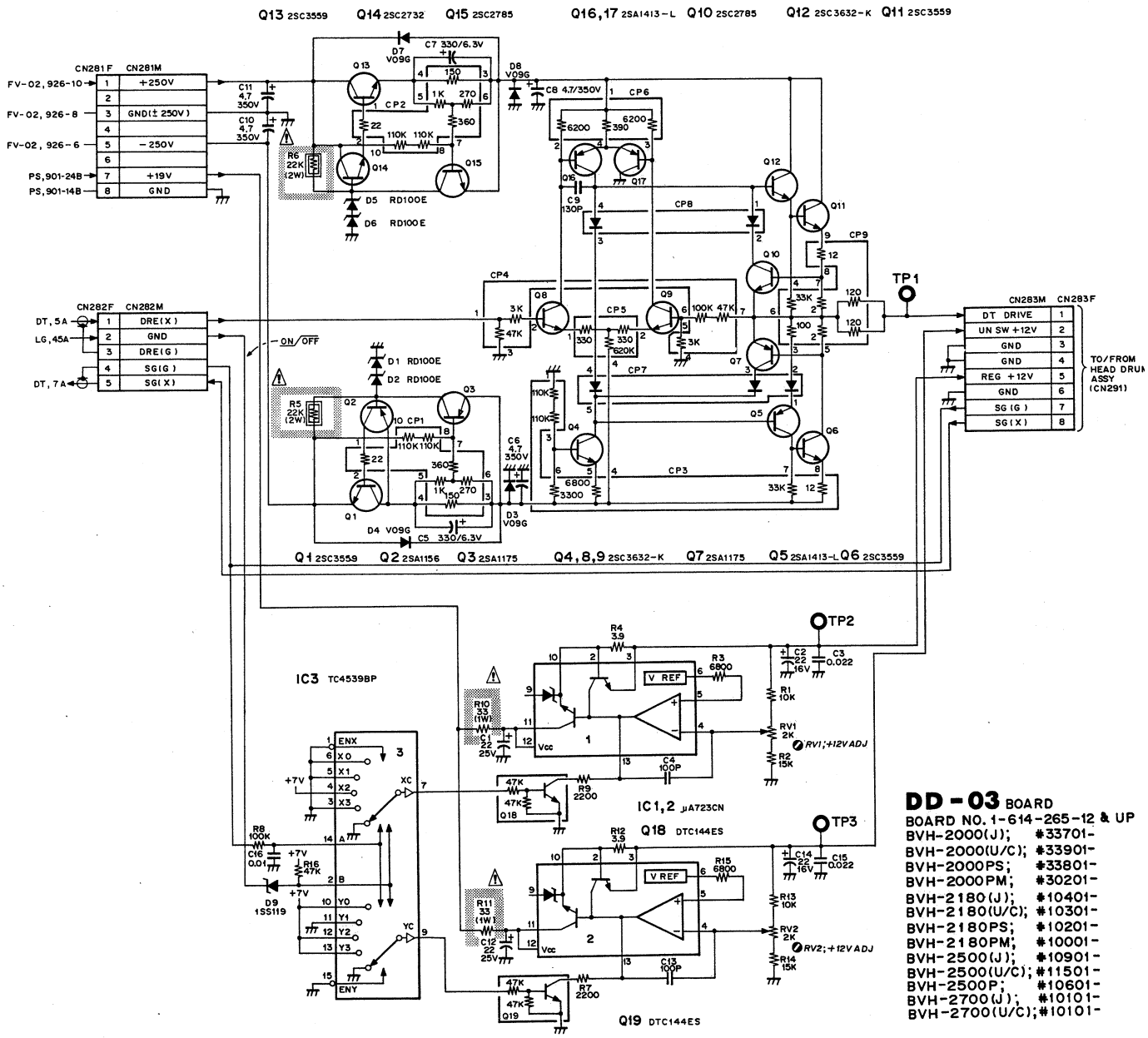

DD-03 BOARD

BOARD NO. 1-614-265-12 & UP

BVH-2000(J); #33701-
BVH-2000(U/C); #33901-
BVH-2000PS; #33801-
BVH-2000PM; #30201-
BVH-2180(J); #10401-
BVH-2180(U/C); #10301-
BVH-2180PS; #10201-
BVH-2180PM; #10001-
BVH-2500(J); #10901-
BVH-2500(U/C); #11501-
BVH-2500P; #10601-
BVH-2700(J); #10101-
BVH-2700(U/C); #10101-

DA-07 BOARD (1-606-696-12)

Component Side

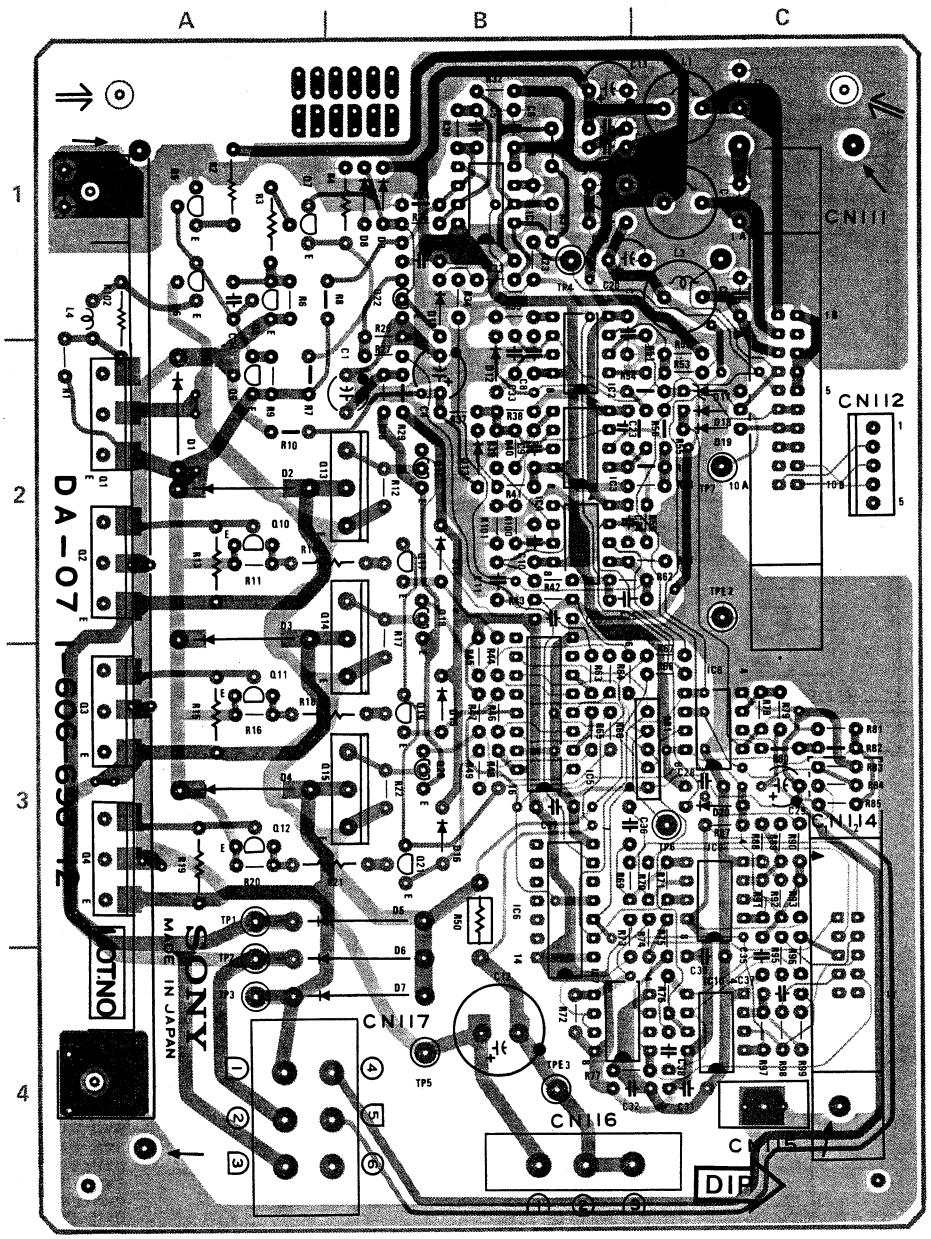

■ 1-606-696-12
COMPONENT SIDE

■ 1-606-696-12
SOLDER SIDE

DA-07 (1-606-696-12 & UP)

BVH-2000/PS/PM
BVH-2180/PS/PM
BVH-2500/P

CN111M		TP4	1B
	2C	TP5	4B
CN112M		TP6	3C
	2C	TP7	2C
CN114M			
	4C	TPE2	2C
CN115M		TPE3	4B
	4C		
CN116M			
	4B		
CN117M			
	4A		

D1	2A
D2	2A
D3	3A
D4	3A
D5	3B
D6	4B
D7	4B
D8	1B
D9	1B
D10	1B
D12	2B
D13	2B
D14	2B
D15	3B
D16	3B
D17	2C
D18	2C
D19	2C
D20	3C

IC1	1B
IC2	2B
IC3	2B
IC4	2B
IC5	3B
IC6	3B
IC7	4B
IC8	3C
IC9	3C
IC10	4C

Q1	2A
Q2	2A
Q3	3A
Q4	3A
Q5	1A
Q6	1A
Q7	1A
Q8	1A
Q9	2A
Q10	2A
Q11	3A
Q12	3A
Q13	2B
Q14	3B
Q15	3B
Q16	2B
Q17	2B
Q18	2B
Q19	3B
Q20	3B
Q21	3B
Q22	1B

RB1	3C

DA-07 BOARD

Drum Motor Driver

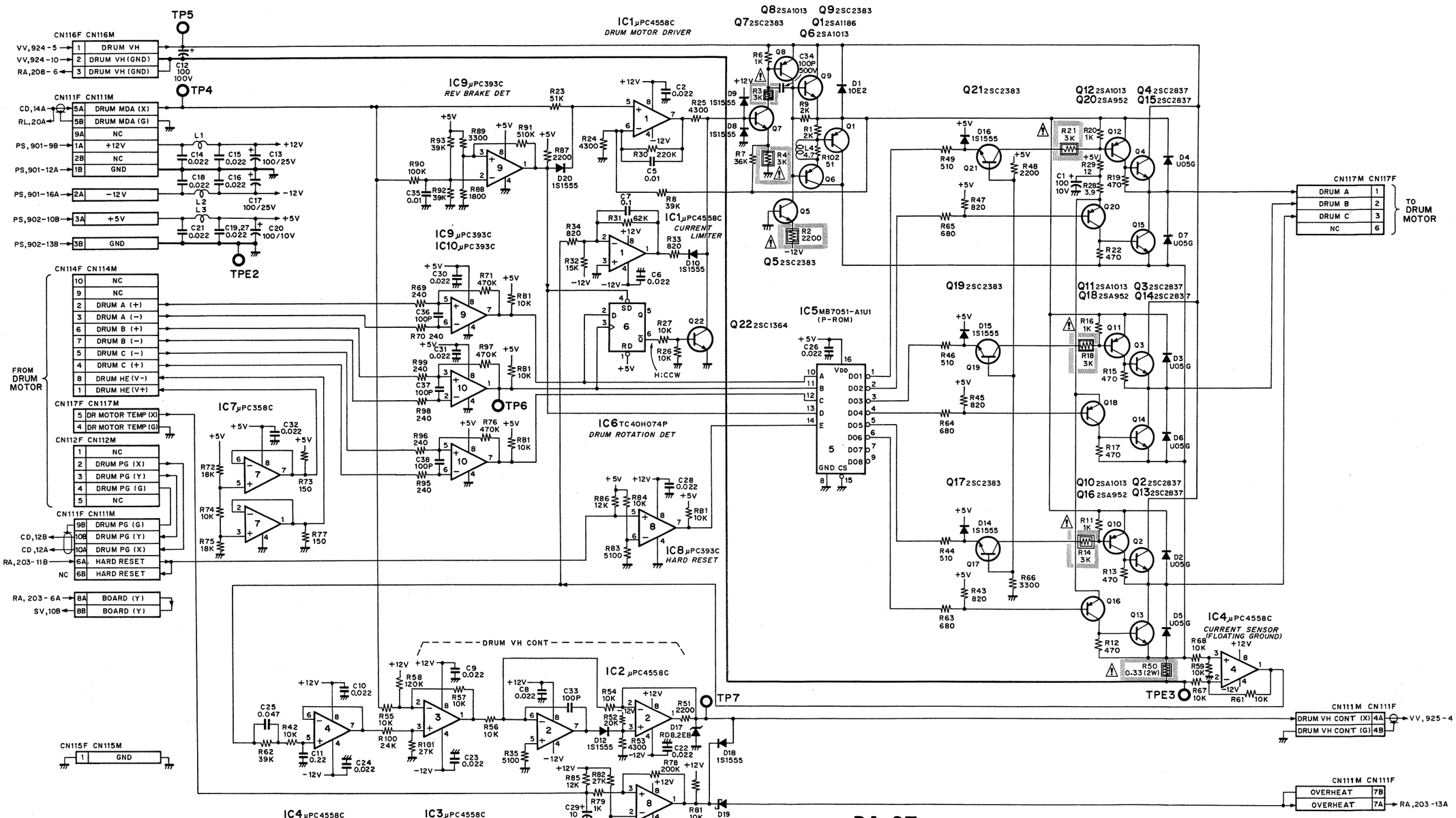

DA-07 BOARD

BOARD NO. 1-606-696-11 & UP

BVH-2000(J); #10001−	BVH-2180(J); #10001−	BVH-2500(J); #10001−
BVH-2000(U/C); #10001−	BVH-2180(U/C) #10001−	BVH-2500(U/C); #10001−
BVH-2000PS; #10001−	BVH-2180PS; #10001−	BVH-2500P; #10001−
BVH-2000PM; #10001−	BVH-2180PM; #10001−	

CA-09 TAPE TRANSPORT

CA-09 BOARD (1-606-695-12)

Component Side

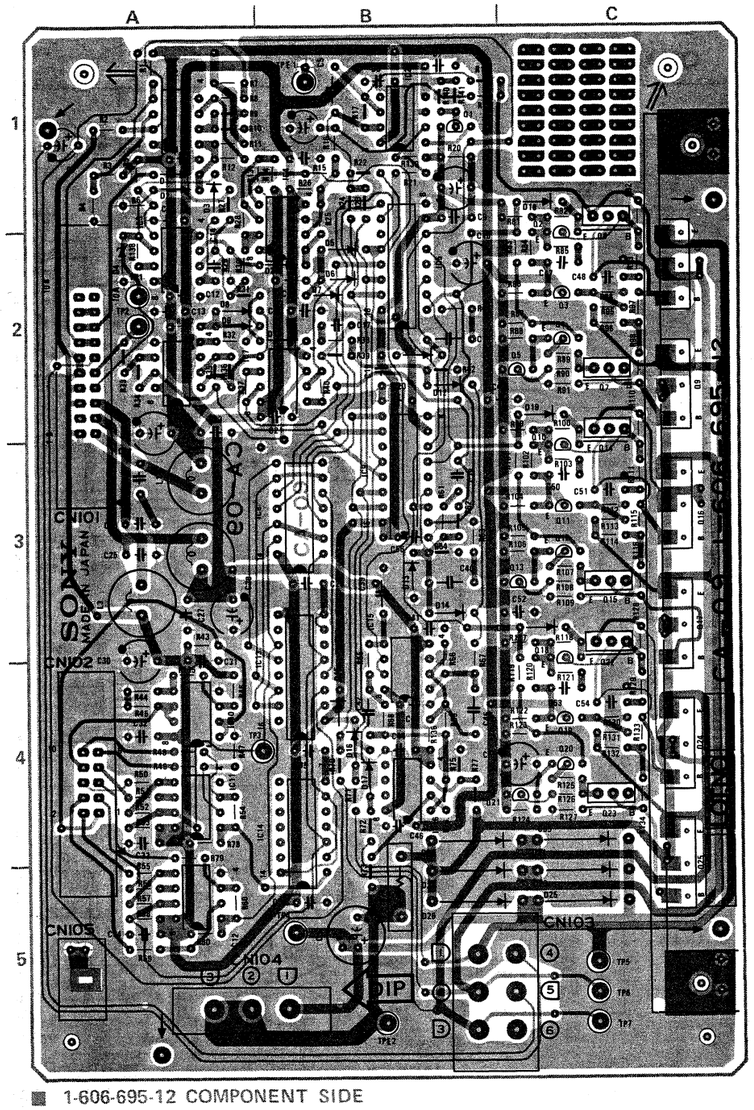

■ 1-606-695-12 COMPONENT SIDE

■ 1-606-695-12 SOLDER SIDE

CA-09 (1-606-695-11 & UP)

BVH-2000/PS/PM	TP1 2A
BVH-2180/PS/PM	TP2 2A
BVH-2500/P	TP3 4A
	TP4 5B
CN101M	TP5 5C
2A	TP6 5C
CN102M	TP7 5C
4A	
CN103M	TPE1 1B
5B	TPE2 5B
CN104M	
5A	
CN105M	
5A	

D1	1A
D2	1A
D3	1A
D4	2A
D5	2B
D6	2B
D7	2B
D8	2A
D9	2A
D10	2B
D11	2B
D12	2B
D13	3B
D14	3B
D15	4B
D16	4B
D17	4B
D18	1C
D19	2C
D20	3C
D21	4C
D22	4B
D23	5C
D24	5B
D25	5C
D26	5B

IC1	1A
IC2	1B
IC3	2A
IC4	1B
IC5	2B
IC6	2A
IC7	2A
IC8	3B
IC9	3B
IC10	4A
IC11	4A
IC12	5A
IC13	3B
IC14	4B
IC15	3B
IC16	4B

Q1	1B
Q2	2C
Q3	2C
Q4	2C
Q5	2C
Q6	2C
Q7	2C
Q8	2C
Q9	2C
Q10	3C
Q11	3C
Q12	3C
Q13	3C
Q14	2C
Q15	3C
Q16	3C
Q17	3C
Q18	3C
Q19	4C
Q20	4C
Q21	4C
Q22	3C
Q23	4C
Q24	4C
Q25	4C

CA-09 BOARD

Capstan Motor Driver

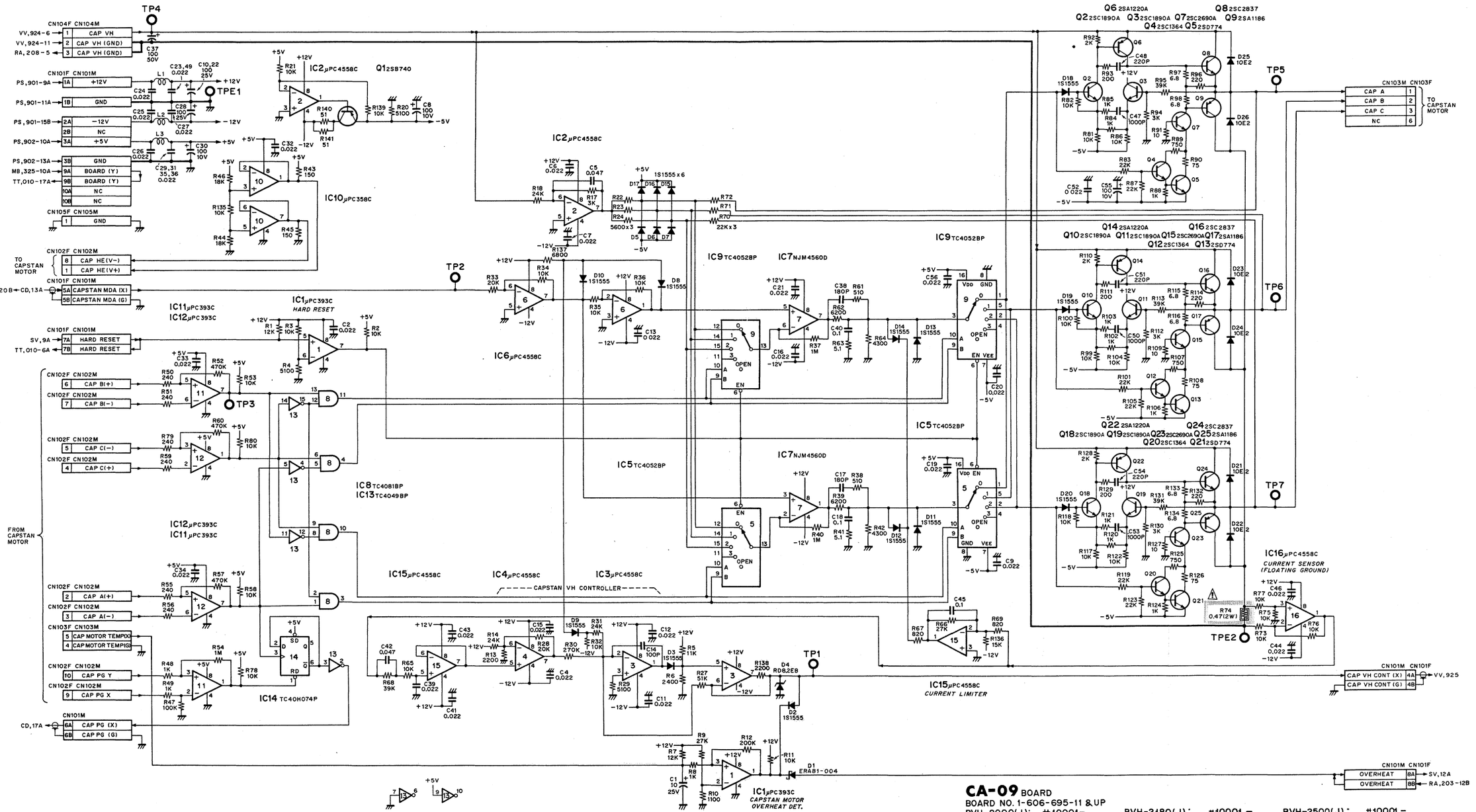

CA-09 BOARD

BOARD NO. 1-606-695-11 &UP

BVH-2000(J); #10001−	BVH-2180(J); #10001 −	BVH-2500(J); #10001 −
BVH-2000(U/C); #10001−	BVH-2180(U/C); #10001 −	BVH-2500(U/C); #10001 −
BVH-2000PS; #10001−	BVH-2180PS; #10001 −	BVH-2500P; #10001 −
BVH-2000PM; #10001−	BVH-2180PM; #10001 −	

RA-05 TAPE TRANSPORT

RA-05 BOARD (1-606-694-13, 14)

Component Side

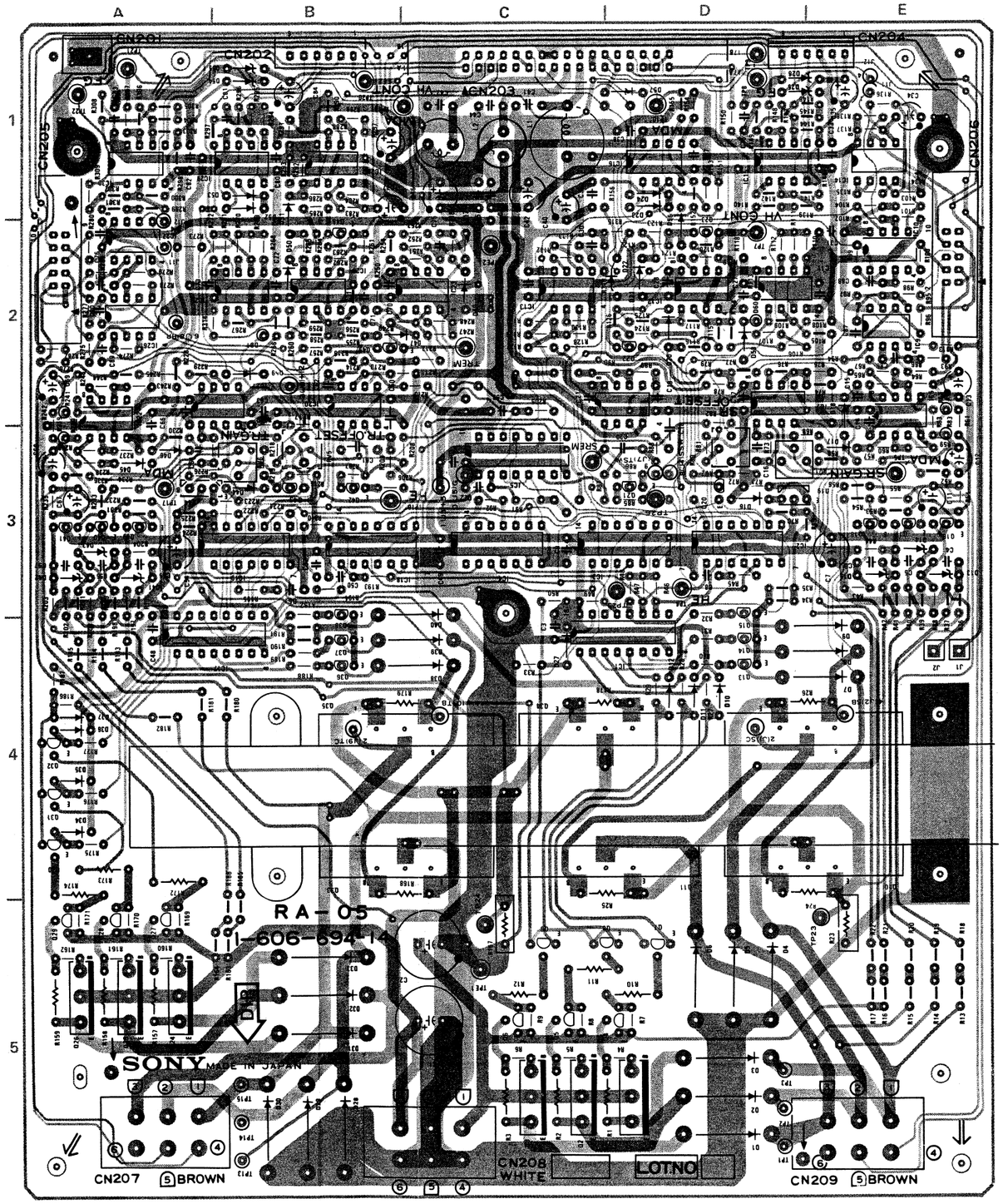

■ 1-606-694-14 COMPONENT SIDE

SW-14 BOARD (1-609-900-11)

Component Side

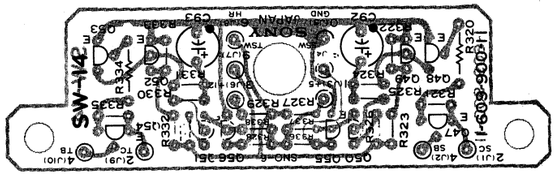

■ 1-609-900-11

RA-05 (1-606-694-13 & UP)

BVH-2000/PS/PM
BVH-2180/PS/PM
BVH-2500/P

CN201M		Q1	5D
	1A	Q2	5C
CN202M		Q3	5C
	1B	Q4	5D
CN203M		Q5	5C
	1C	Q6	5C
CN204M		Q7	5D
	1E	Q8	5C
CN205M		Q9	5C
	2A	Q10	4E
CN206M		Q11	4D
	2E	Q12	4E
CN207M		Q13	4D
	5A	Q14	4D
CN208M		Q15	3D
	5C	Q16	3E
CN209M		Q17	3E
	5E	Q18	3E
		Q19	3D
D1	5D	Q20	3D
D2	5D	Q21	3D
D3	5D	Q22	2D
D4	5D	Q23	2D
D5	5D	Q24	5A
D6	5D	Q25	5A
D7	4E	Q26	5A
D8	4E	Q27	5A
D9	4E	Q28	5A
D10	4D	Q29	5A
D11	4D	Q30	4A
D12	4D	Q31	4A
D13	3E	Q32	4A
D14	3E	Q33	4B
D15	3E	Q34	4D
D16	3D	Q35	4B
D17	3E	Q36	4B
D18	2E	Q37	4B
D20	2D	Q38	3B
D21	2D	Q39	3A
D22	2D	Q40	3A
D23	1D	Q41	3A
D24	1D	Q42	3B
D25	1D	Q43	3B
D26	1D	Q44	3A
D27	4C	Q45	2B
D28	5B	Q46	2B
D29	5B		
D30	5B	(SW-14 BOARD)	
D31	5B	Q47	4D
D32	5B	Q48	3D
D33	5B	Q49	3D
D34	4A	Q50	4C
D35	4A	Q51	4C
D36	4A	Q52	3B
D37	4A	Q53	3B
D38	4C	Q54	4B
D39	4C	Q55	4C
D40	3C	Q56	4C
D41	3A		
D42	3A	RV1	3D
D43	3A	RV2	3D
D44	3B	RV5	3B
D45	3A	RV6	3B
D46	3A		
D47	2B	TP1	5D
D49	2C	TP2	5D
D50	2B	TP3	5D
D51	1B	TP4	3D
D52	1B	TP5	3E
D53	1B	TP7	2D
D54	1B	TP8	1D
D55	1B	TP9	1D
D56	2D	TP10	1D
D57	1D	TP13	5B
D58	2D	TP14	5B
D59	2B	TP15	5B
D60	2D	TP16	3B
D61	2B	TP17	3A
D62	1A	TP19	1B
D63	1E	TP20	1B
		TP21	1A
IC1	4D	TP22	1A
IC2	3D	TP23	5E
IC3	3D	TP24	5C
IC4	3C	TP25	3D
IC5	3C	TP26	3D
IC6	3E		
IC7	2D	TPE1	5C
IC8	2D	TPE2	2C
IC9	2E		
IC10	2E		
IC11	2D		
IC12	2D		
IC13	2C		
IC14	1E		
IC15	1D		
IC16	1D		
IC17	4B		
IC18	3B		
IC19	3B		
IC20	2B		
IC21	2B		
IC22	2A		
IC23	2C		
IC24	2B		
IC25	2B		
IC26	2A		
IC27	2A		
IC28	1B		
IC29	1B		
IC30	1A		

■ 1-606-694-14

RA-05 BOARD

Reel Motor Driver

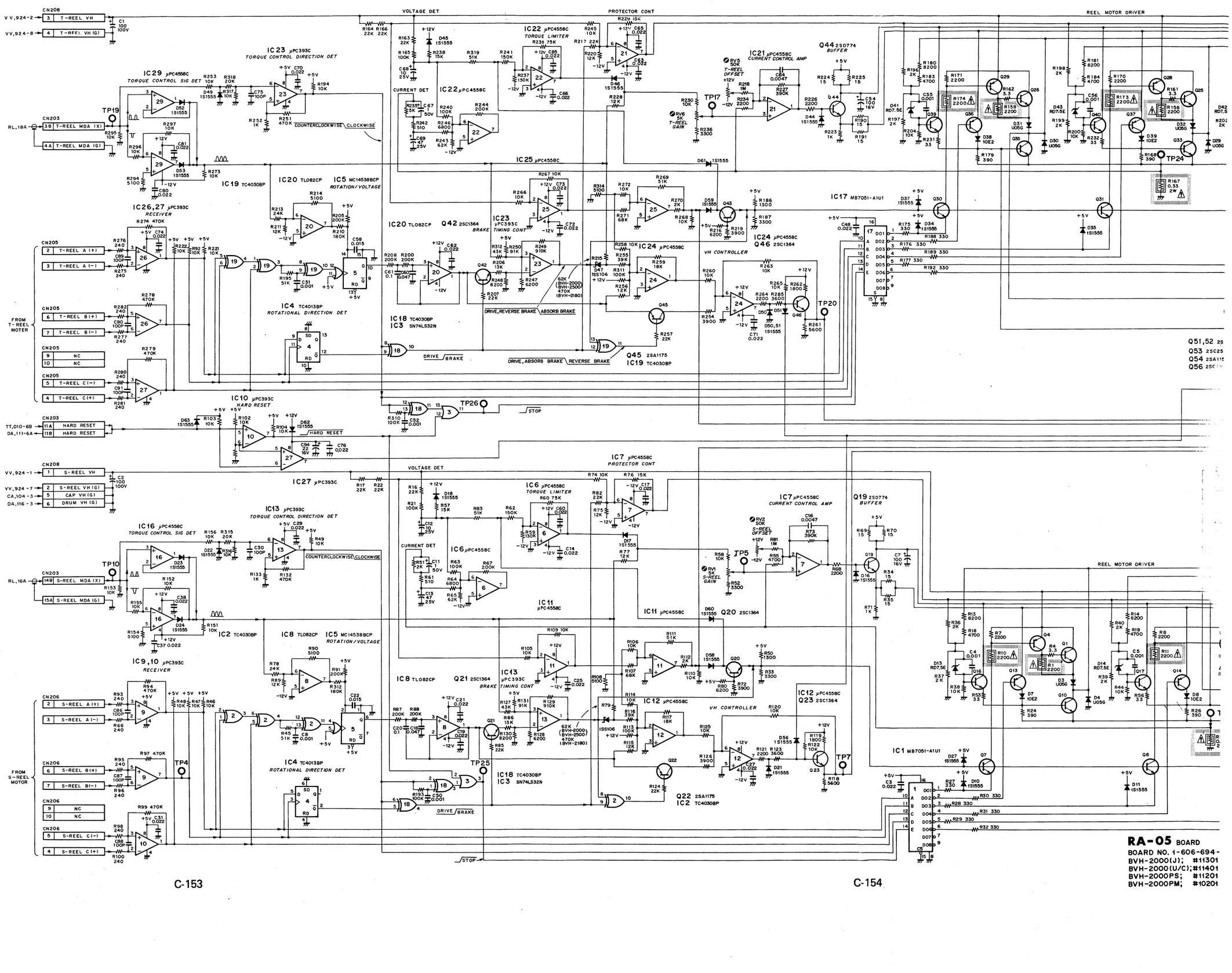

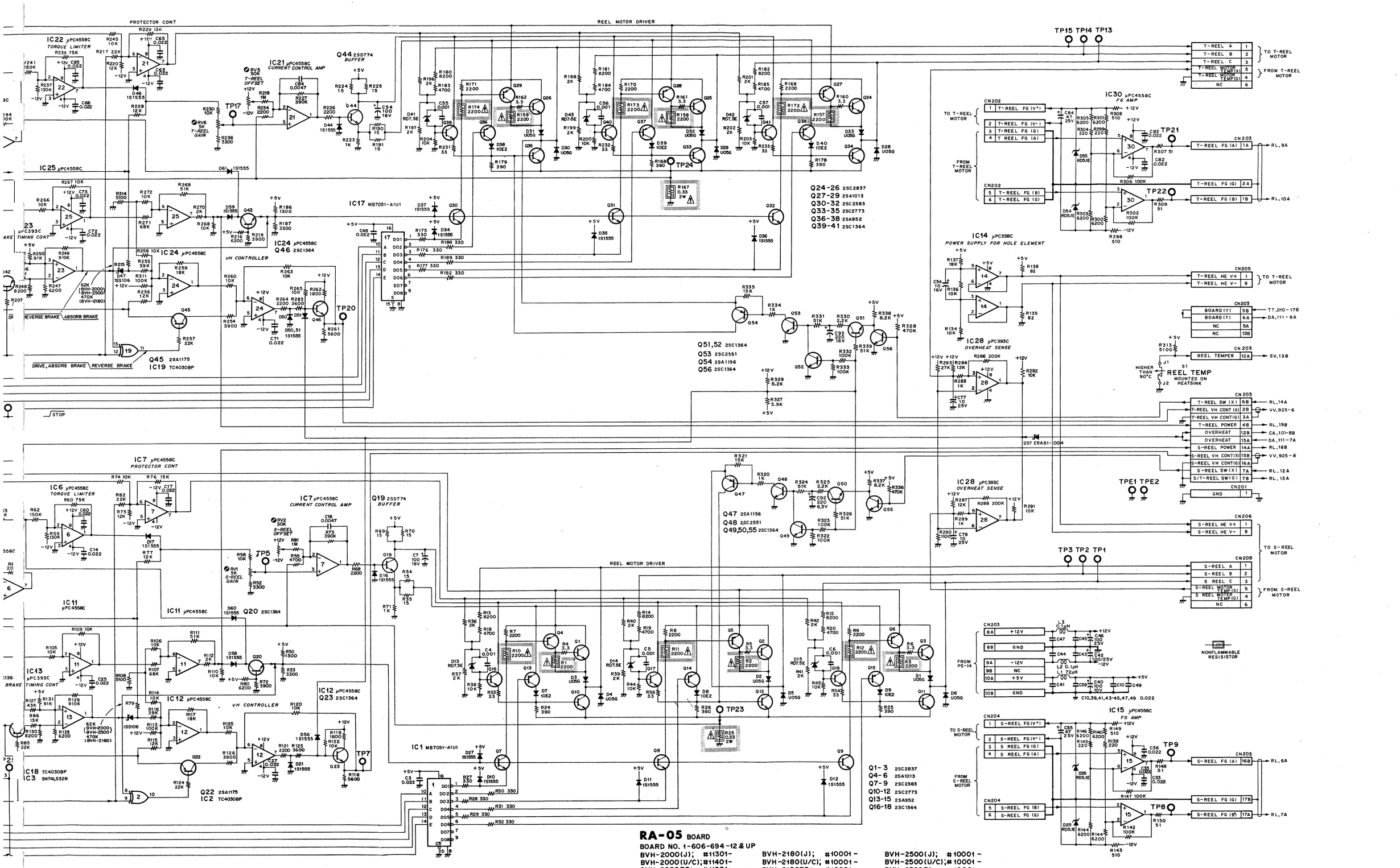

RA-05 BOARD

BOARD NO. 1-606-694-12 & UP

BVH-2000(J); #11301-	BVH-2180(J); #10001-	BVH-2500(J); #10001-
BVH-2000(U/C); #11401-	BVH-2180(U/C); #10001-	BVH-2500(U/C); #10001-
BVH-2000PS; #11201-	BVH-2180PS; #10001-	BVH-2500P; #10001-
BVH-2000PM; #10201-	BVH-2180PM; #10001-	

TT-01 TAPE TRANSPORT

TT-01 BOARD (1-606-697-12)

Component Side

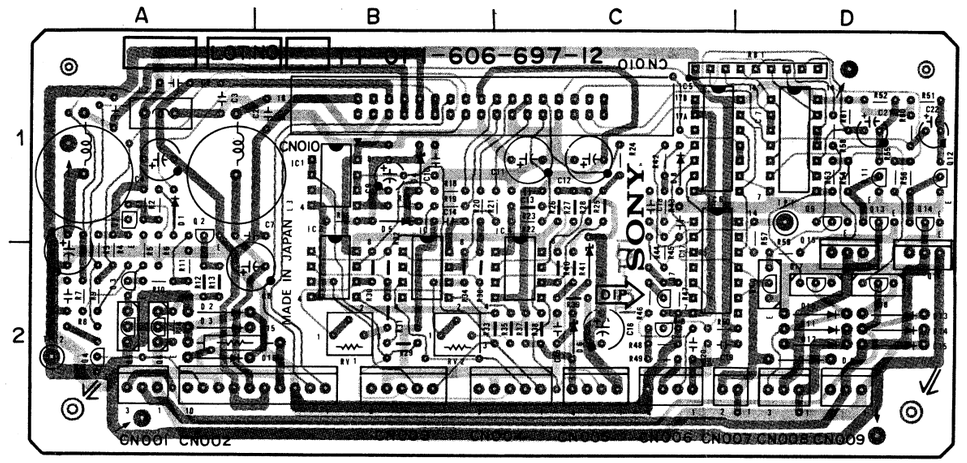

TT-01 (1-606-697-12 & UP)			
BVH-2000/PS/PM		IC1	1B
BVH-2180/PS/PM		IC2	2B
BVH-2500/P		IC3	2B
		IC4	2C
CN001M		IC5	1C
	2A	IC6	2C
CN002M		IC7	1D
	2A		
CN003M		Q1	1A
	2B	Q2	1A
CN004M		Q3	2A
	2C	Q4	2A
CN005M		Q5	2A
	2C	Q6	2A
CN006M		Q7	2C
	2C	Q8	2C
CN007M		Q9	1D
	2C	Q10	2D
CN008M		Q11	1D
	2D	Q12	1D
CN009M		Q13	1D
	2D	Q14	1D
CN010M		Q15	2D
	2B	Q16	2D
		Q17	2D
D1	1A	Q18	2D
D2	2A		
D3	2A	RB1	1D
D4	1B		
D5	1B	RV1	2B
D6	2C	RV2	2B
D7	2C		
D8	1C	TP1	1D
D9	2D		
D10	2D	TPE2	2A
D11	2D		
D12	2D		
D13	2D		
D14	2D		
D15	2D		
D16	2A		

RB1

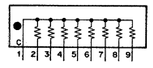

TT-01 BOARD

TTP AUX (Solenoid, Motor Driver etc.)

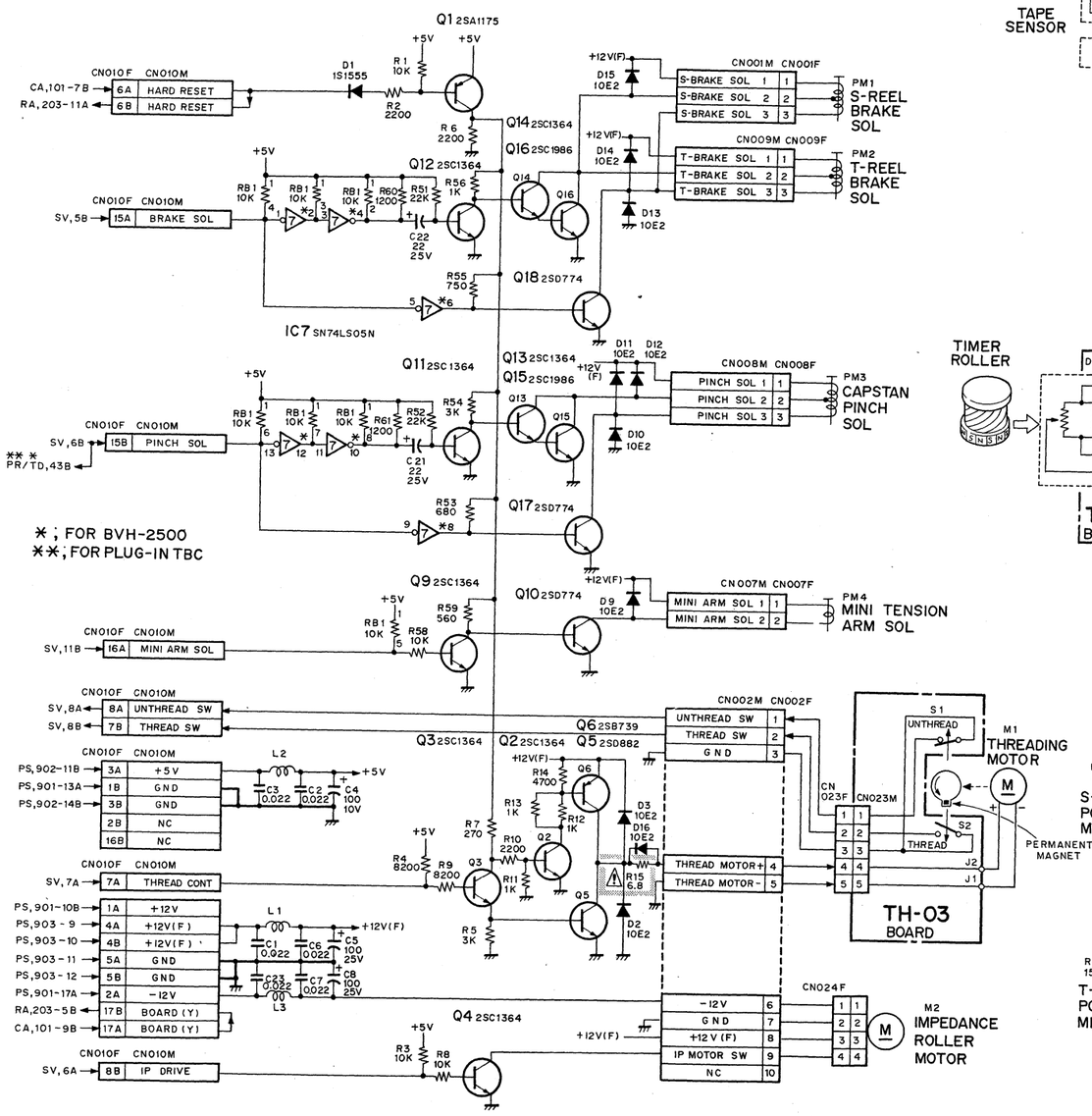

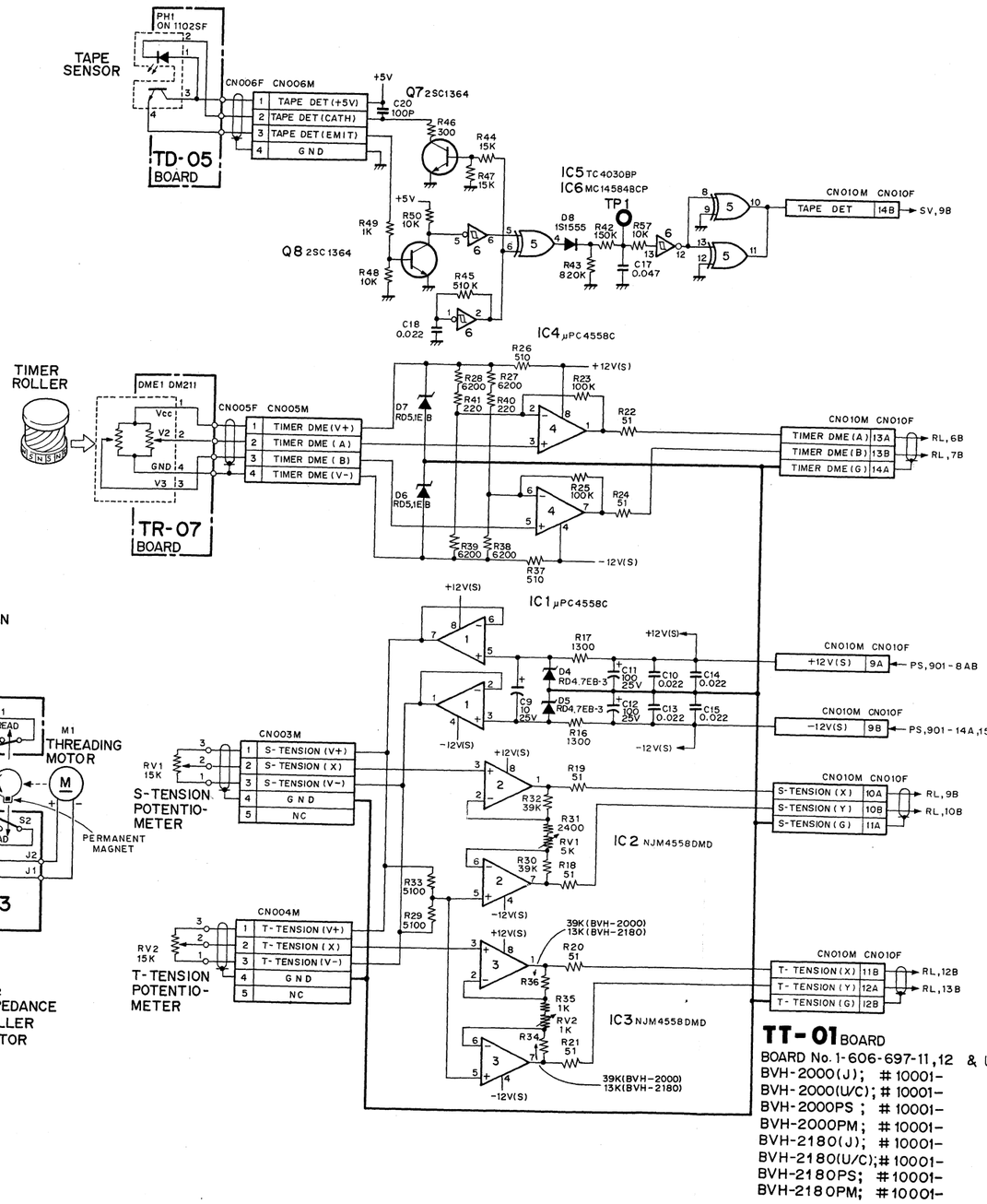

TT-01 BOARD

BOARD No. 1-606-697-11,12 & UP

BVH-2000(J); #10001-

BVH-2000(U/C); #10001-

BVH-2000PS ; #10001-

BVH-2000PM; #10001-

BVH-2180(J); #10001-

BVH-2180(U/C);#10001-

BVH-2180PS; #10001-

BVH-2180PM; #10001-

RS-17 BOARD (1-613-384-11)

Component Side

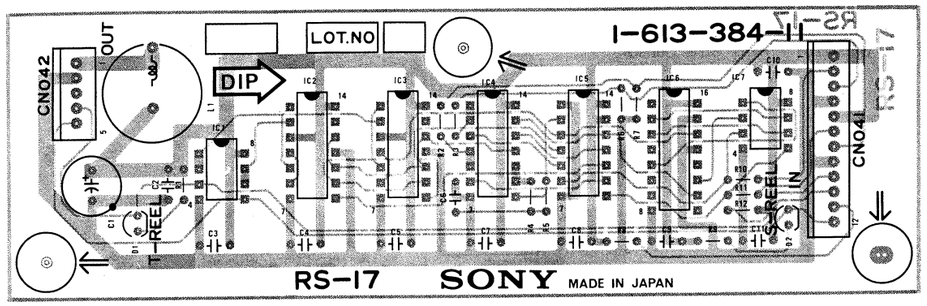

■ 1-613-384-11 COMPONENT SIDE ■ 1-613-384-11 SOLDER SIDE

RS-17 BOARD

Reel Size Sensor

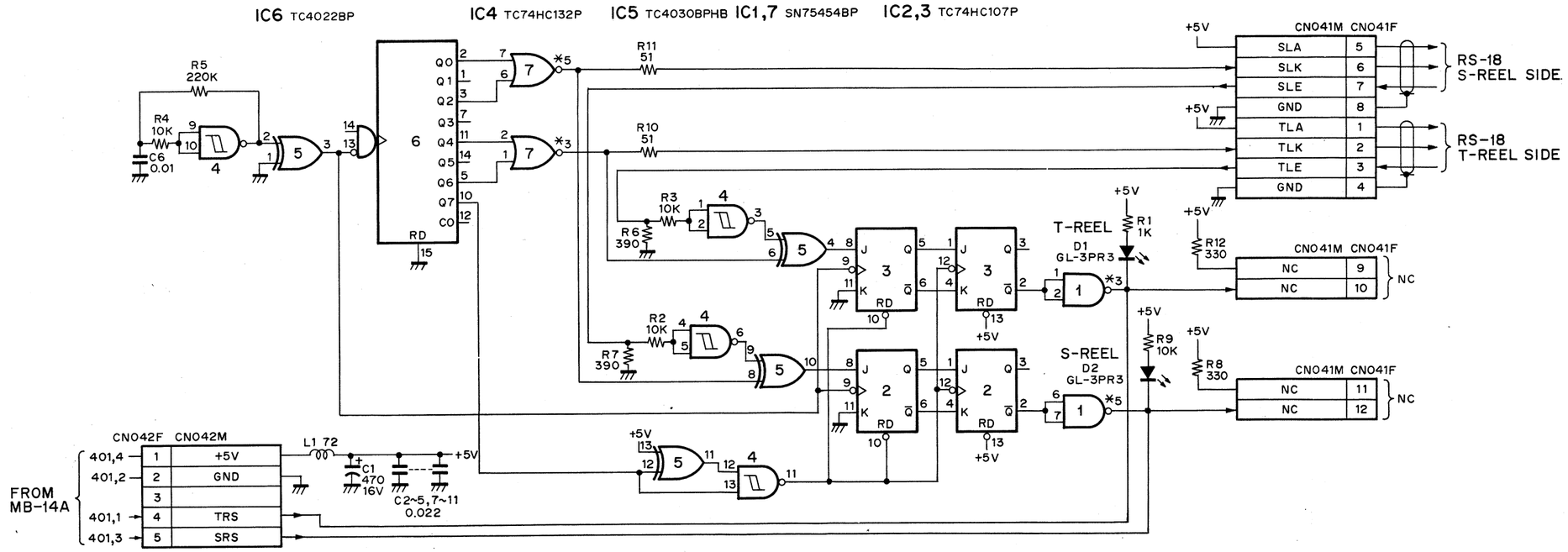

RS-17 BOARD

BOARD NO. 1-613-384-11 & UP
BVH-2180(J); #10001-
BVH-2180(U/C); #10001-
BVH-2180PS; #10001-
BVH-2180PM; #10001-

FRAME WIRING (1/2) **(FOR 02/04)** HM, MOTOR, TM, TD, TH, TR, RS TAPE TRANSPORT

RS-18 BOARD (1-613-389-11)

Solder Side

(FOR BVH-2180)

■ 1-613-389-11
SOLDER SIDE

MOTOR BOARD (1-602-615-11)

Component Side

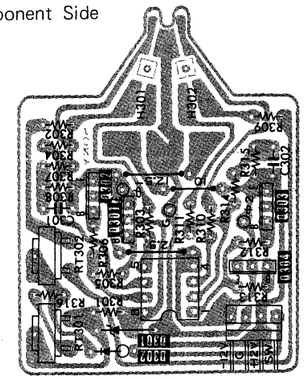

■ 1-602-615-11
SOLDER SIDE

TM-16 BOARD (1-609-959-12)

Component Side

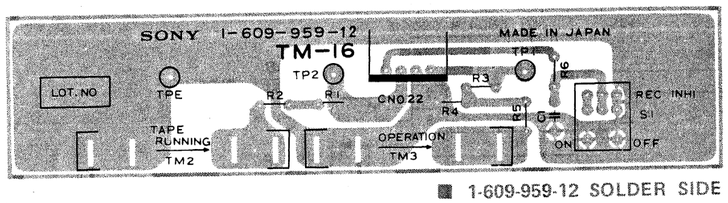

■ 1-609-959-12 SOLDER SIDE

HM-05 BOARD (1-606-699-11)

Component Side

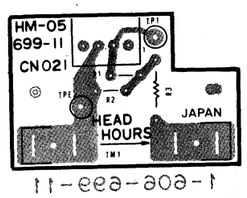

1-606-699-11

TD-05 BOARD (1-606-702-12)

Component Side

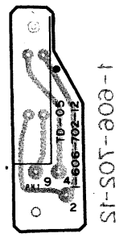

1-606-702-12

TH-03 BOARD (1-606-701-12)

Solder Side

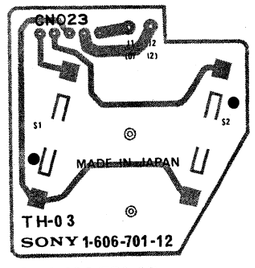

■ 1-606-701-12
SOLDER SIDE

TR-07 BOARD (1-606-698-11)

Solder Side

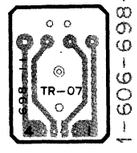

1-606-698-11
SOLDER SIDE

FRAME WIRING (1/2); TAPE TRANSPORT; FOR 02/04 MODEL

HM-05 BOARD: Head Hours Meter
TM-16 BOARD: Tape Running/Operation Hours Meter & REC Inhibit Switch
TD-05 BOARD: Tape Detector
TH-03 BOARD: Threading Motor
TR-07 BOARD: Timer Roller Sensor
MOTOR BOARD; Impedance Roller Motor
RS-18 BOARD; Reel Size Sensor

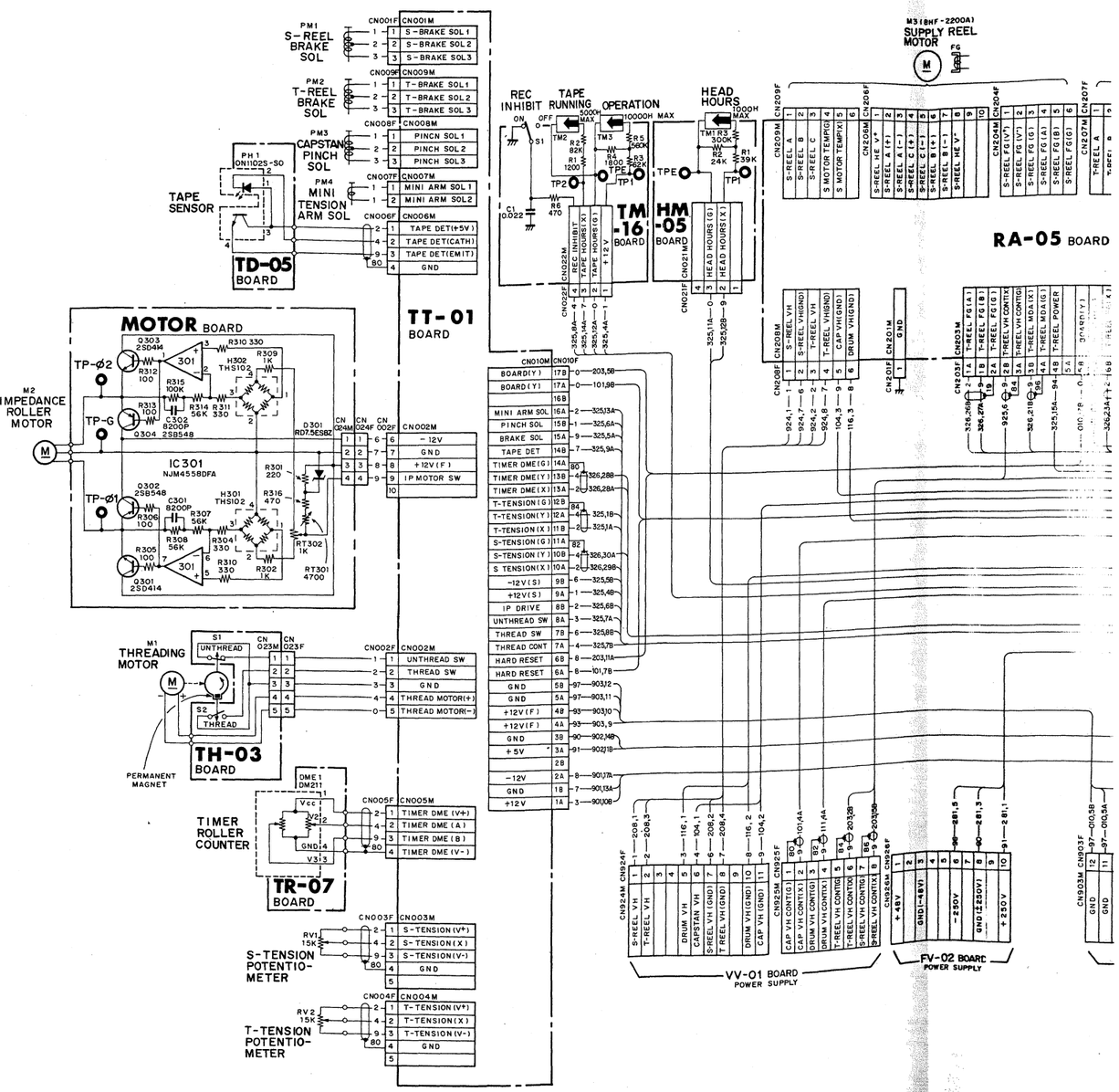

FRAME WIRING (1/2) (FOR 02/04) HM, MOTOR, TM, TD, TH, TR, RS TAPE TRANSPORT

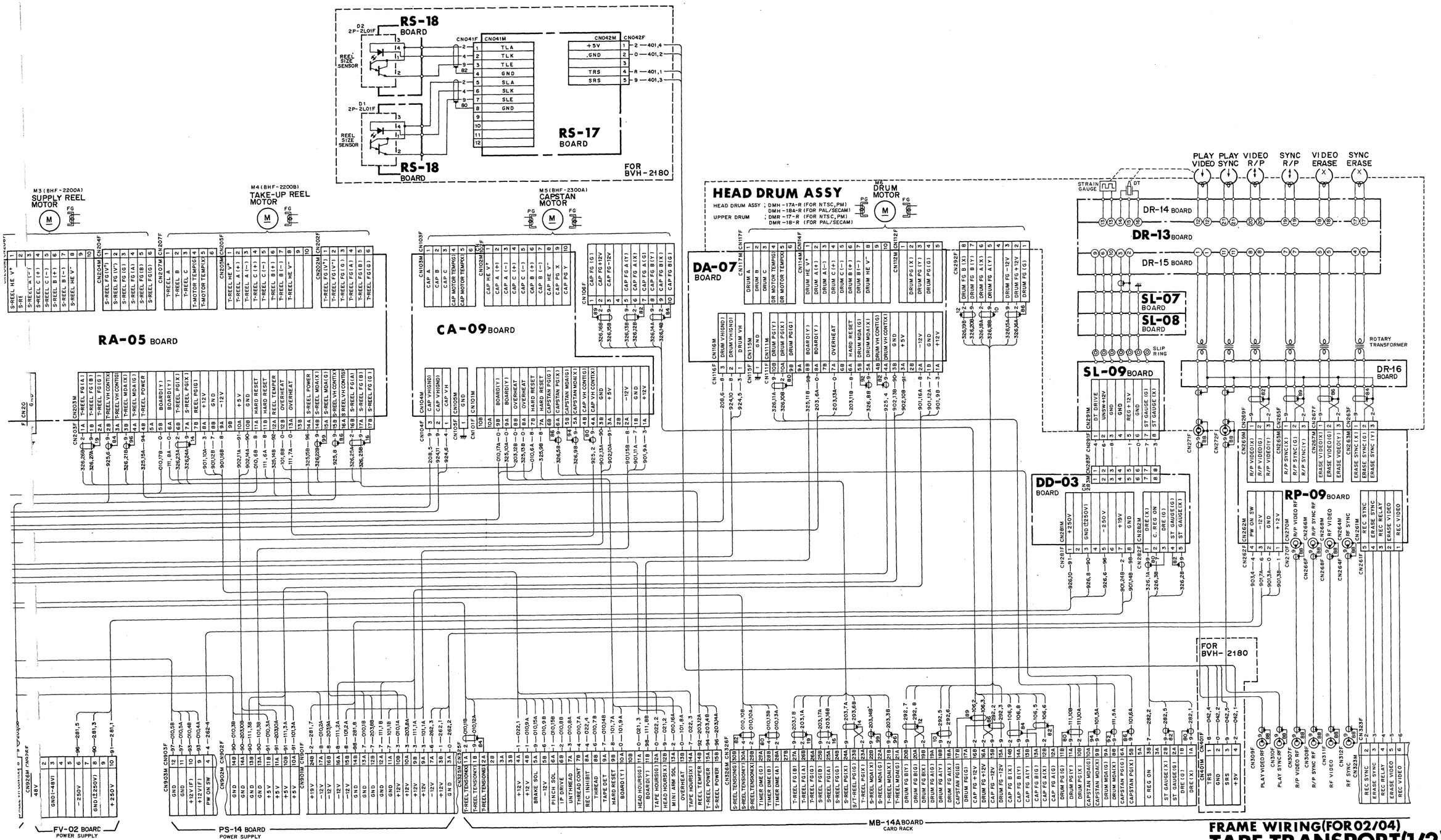

FRAME WIRING(FOR 02/04) TAPE TRANSPORT(1/2)

BVH-2000 (J) : #33301 –
BVH-2000(U/C): #33501 –
BVH-2000PS : #33401 –
BVH-2000PM : #30201 –

BVH-2180(J) : #10001 –
BVH-2180(U/C): #10001 –
BVH-2180PS : #10001 –
BVH-2180PM : #10001 –

FRAME WIRING (1/2) **(FOR 00)** HM, MOTOR, TM, TD, TH, TR, RS TAPE TRANSPORT

FRAME WIRING (1/2); TAPE TRANSPORT; **FOR 00 MODEL**

HM-05 BOARD: Head Hours Meter
TM-16 BOARD: Tape Running/Operation Hours Meter
& REC Inhibit Switch
TD-05 BOARD: Tape Detector
TH-03 BOARD: Threading Motor
TR-07 BOARD: Timer Roller Sensor
MOTOR BOARD; Impedance Roller Motor
RS-18 BOARD; Reel Size Sensor

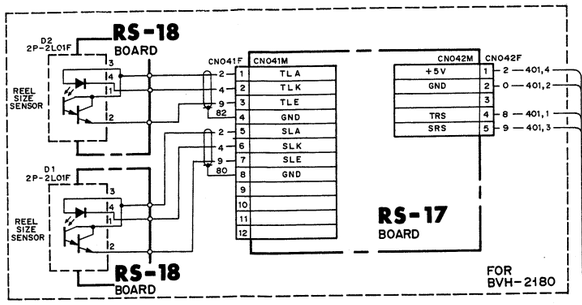

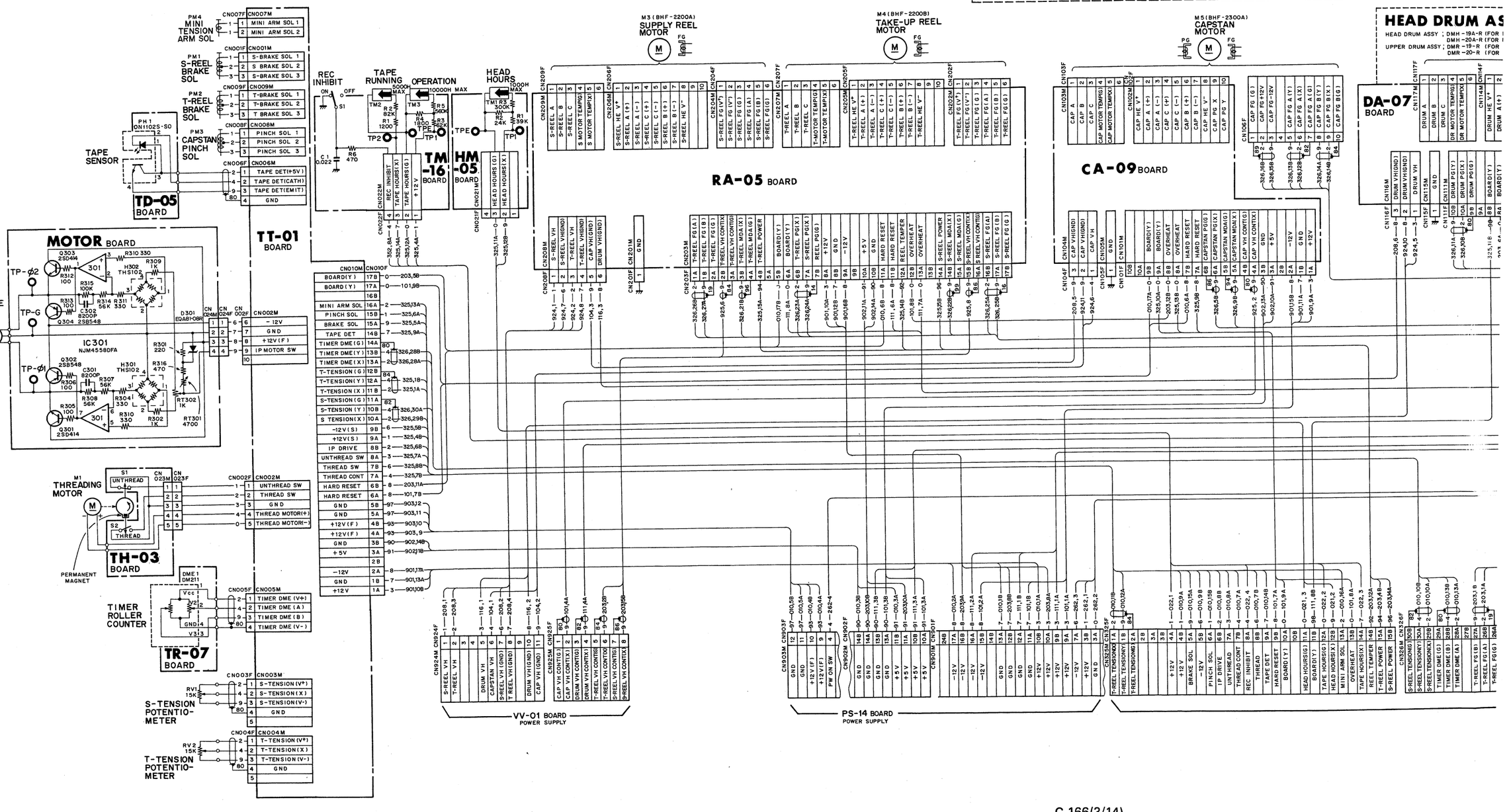

C-166(2/14)

C-166(3/14)

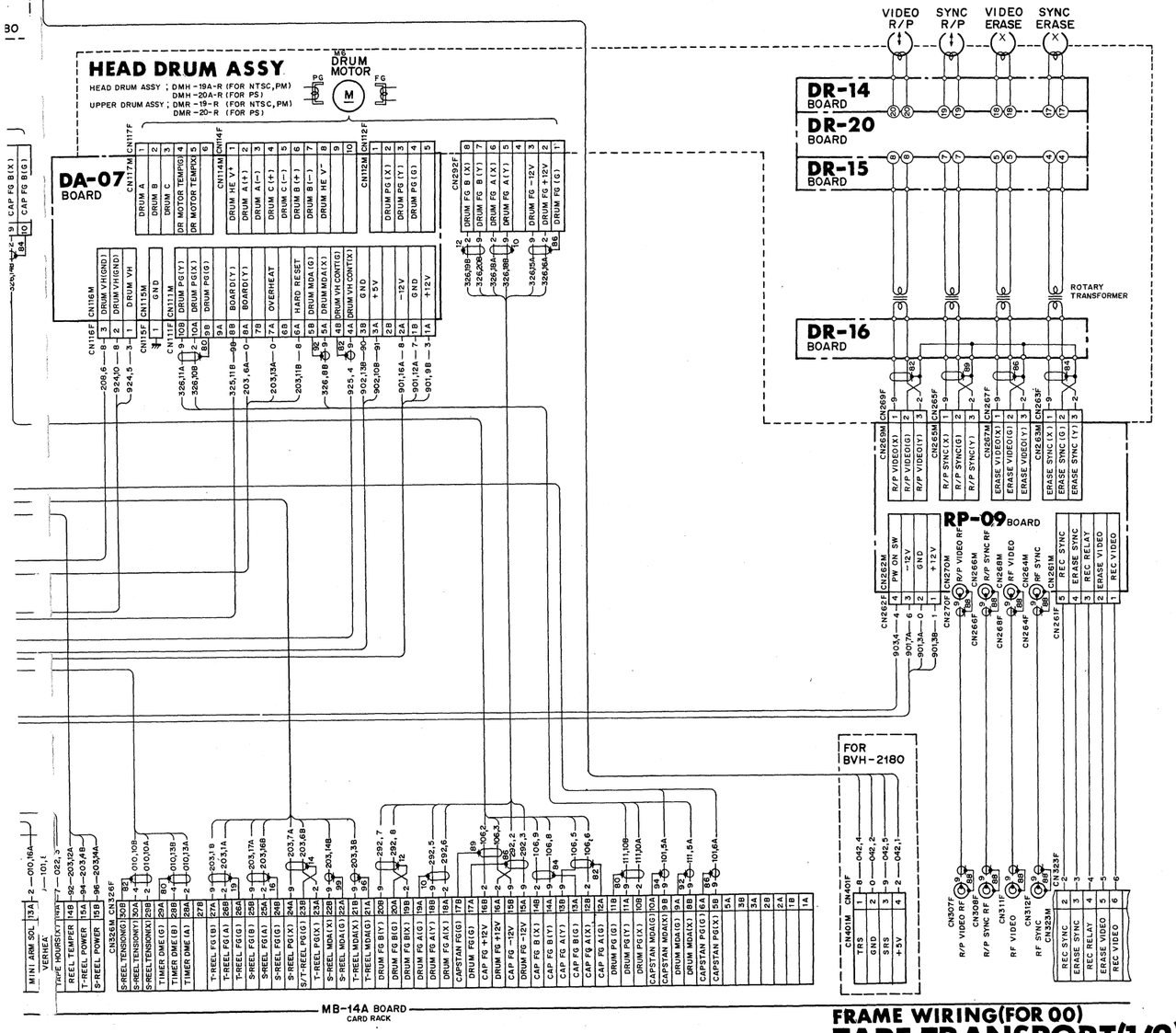

FRAME WIRING(FOR 00)
TAPE TRANSPORT(1/2)

BVH-2000 (J)	: #33301-	BVH-2180(J)	: #10001-
BVH-2000(U/C)	: #33501-	BVH-2180(U/C)	: #10001-
BVH-2000PS	: #33401-	BVH-2180PS	: #10001-
BVH-2000PM	: #30201-	BVH-2180PM	: #10001-

FRAME WIRING (1/2) **(FOR 12/14)** HM, MOTOR, TM, TD, TH, TR, RS TAPE TRANSPORT

RS-18 BOARD (1-613-389-11)

Solder Side

(FOR BVH-2180)

■ 1-613-389-11
SOLDER SIDE

MOTOR BOARD (1-602-615-11)

Component Side

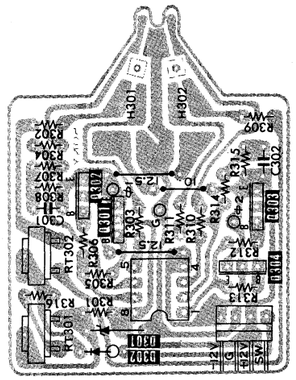

■ 1-602-615-11
SOLDER SIDE

TM-16 BOARD (1-609-959-12)

Component Side

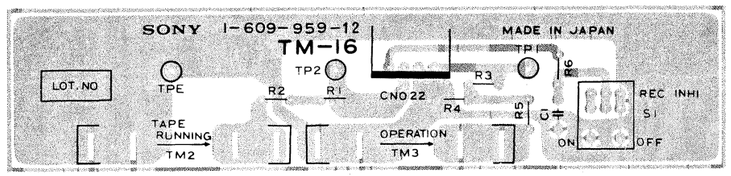

■ 1-609-959-12 SOLDER SIDE

HM-05 BOARD (1-606-699-11)

Component Side

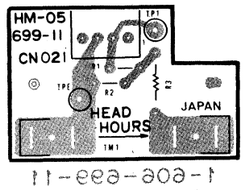

1-606-699-11

TD-05 BOARD (1-606-702-12)

Component Side

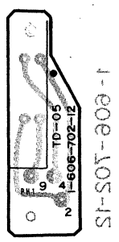

1-606-702-12

TH-03 BOARD (1-606-701-12)

Solder Side

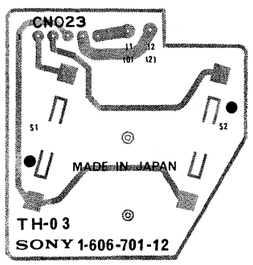

■ 1-606-701-12
SOLDER SIDE

TR-07 BOARD (1-606-698-11)

Solder Side

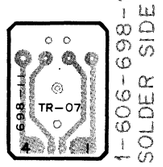

1-606-698-11
SOLDER SIDE

FRAME WIRING (1/2); TAPE TRANSPORT; FOR 12/14 MODEL

HM-05 BOARD: Head Hours Meter
TM-16 BOARD: Tape Running/Operation Hours Meter & REC Inhibit Switch
TD-05 BOARD: Tape Detector
TH-03 BOARD: Threading Motor
TR-07 BOARD: Timer Roller Sensor
MOTOR BOARD; Impedance Roller Motor
RS-17 BOARD; Reel Size Sensor
RS-18 BOARD; Reel Size Sensor

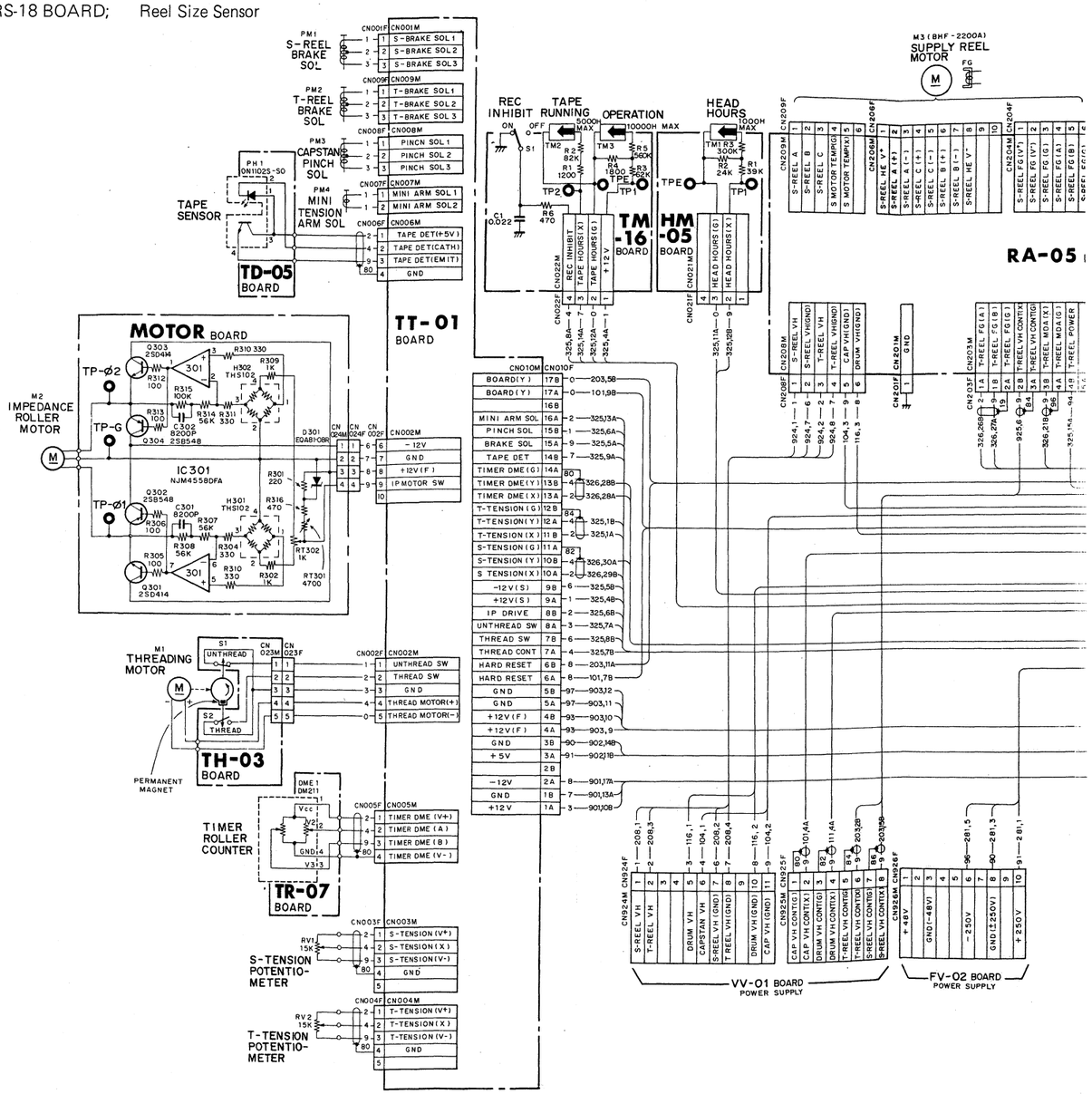

FRAME WIRING (1/2) (FOR 12/14) HM, MOTOR, TM, TD, TH, TR, RS TAPE TRANSPORT

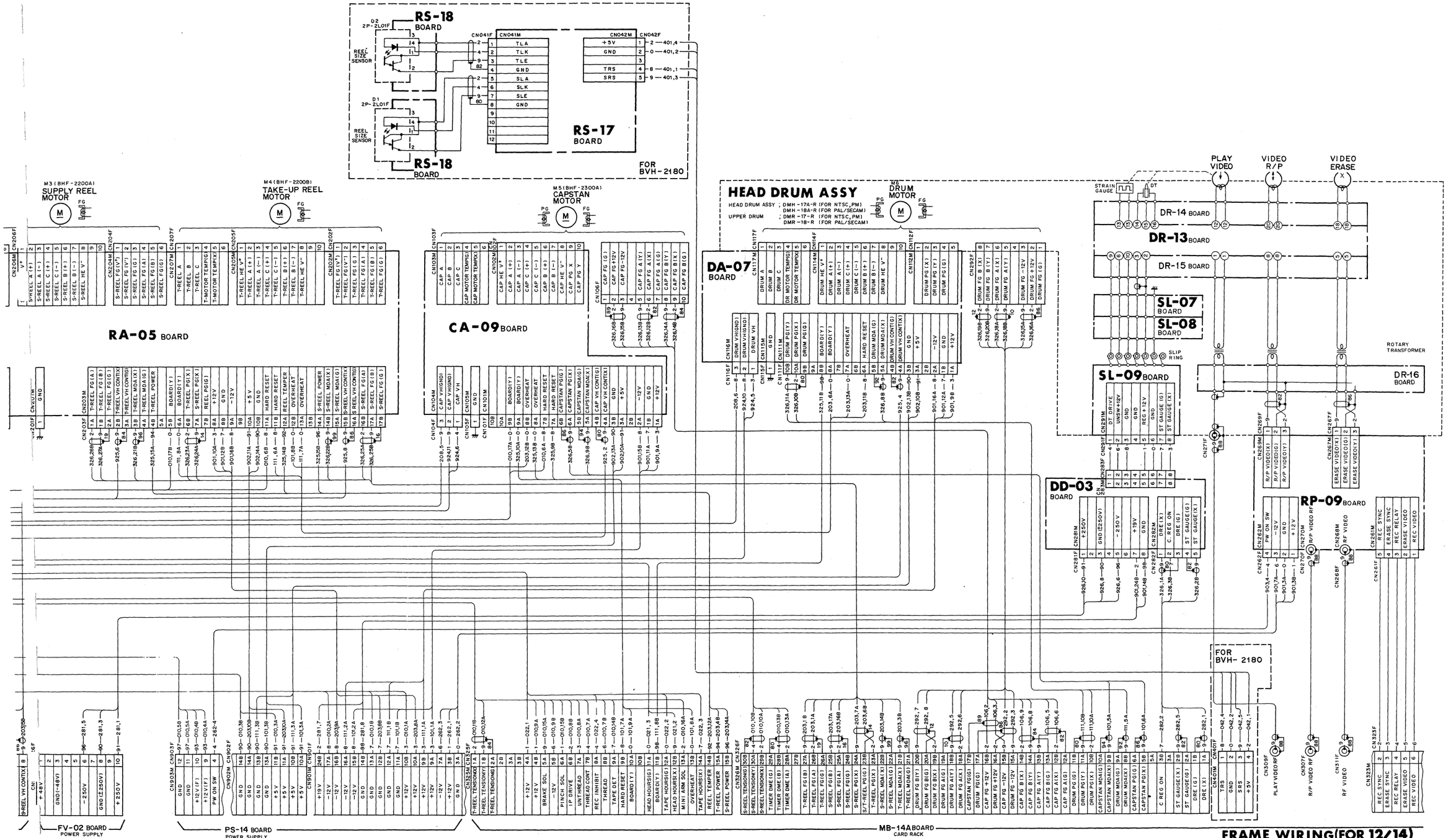

FRAME WIRING(FOR 12/14) TAPE TRANSPORT(1/2)

BVH-2000(U/C);#34501-
BVH-2000PS; #34301-

FRAME WIRING (1/2) (FOR 10) HM-05, MOTOR, TM-16, TD-05, TH-03, TR-07 TAPE TRANSPORT

FRAME WIRING (1/2); TAPE TRANSPORT; FOR 10 MODEL

HM-05 BOARD: Head Hours Meter
TM-16 BOARD: Tape Running/Operation Hours Meter & REC Inhibit Switch
TD-05 BOARD: Tape Detector
TH-03 BOARD: Threading Motor
TR-07 BOARD: Timer Roller Sensor
MOTOR BOARD; Impedance Roller Motor

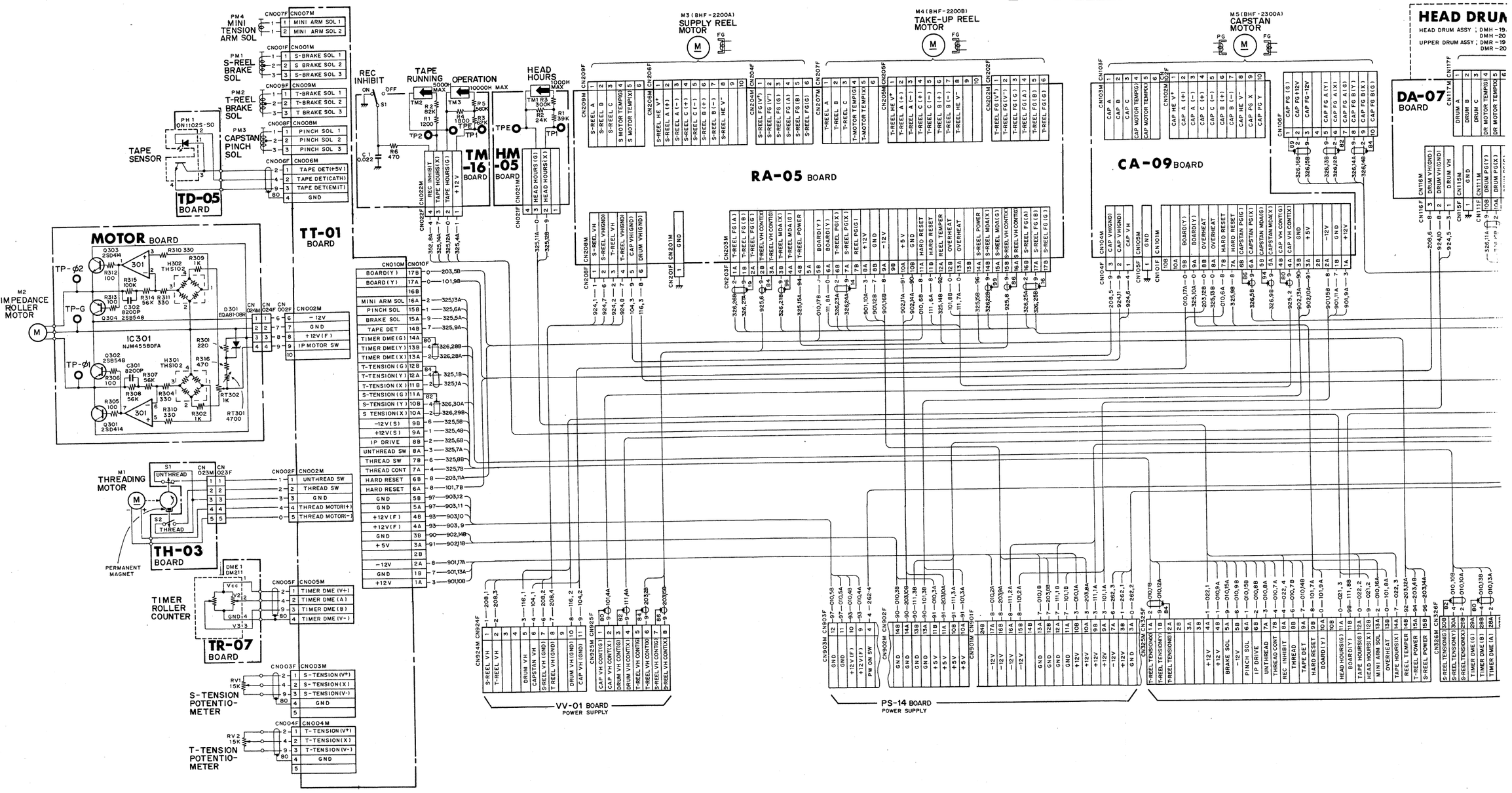

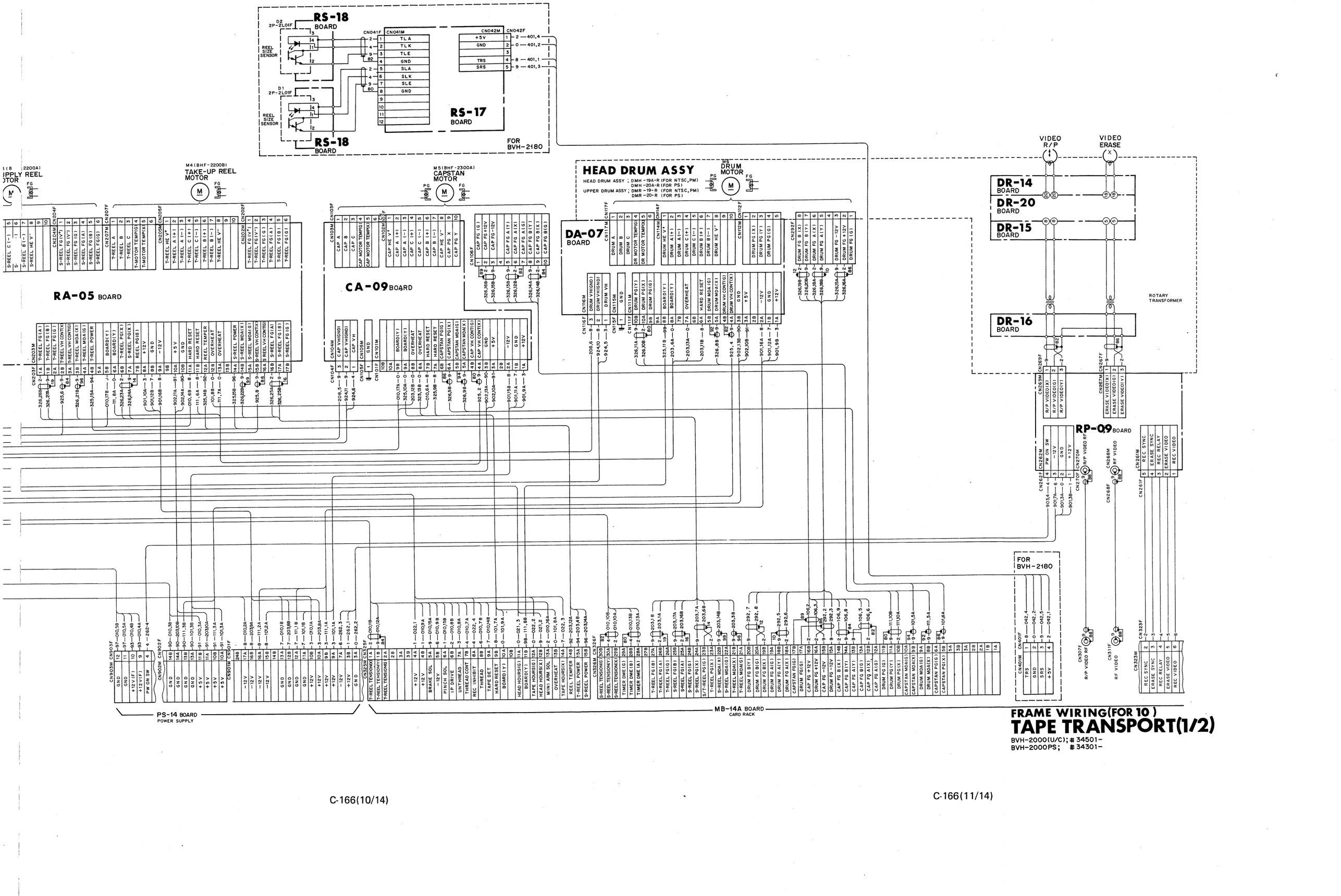

FRAME WIRING(FOR 10)

TAPE TRANSPORT(1/2)

BVH-2000(U/C); #34501-
BVH-2000PS; #34301-

FRAME WIRING (2/2) **(FOR 00/10/01/12)** CEH-2, HD-06/07 TAPE TRANSPORT

FRAME WIRING (2/2); TAPE TRANSPORT; FOR 00/10/02/12 MODEL

HD-06 BOARD: Video/Sync Erase Head
CEH-2 BOARD: Audio/CTL Erase Head
HD-07 BOARD: Audio/CTL R/P, Monitor Head

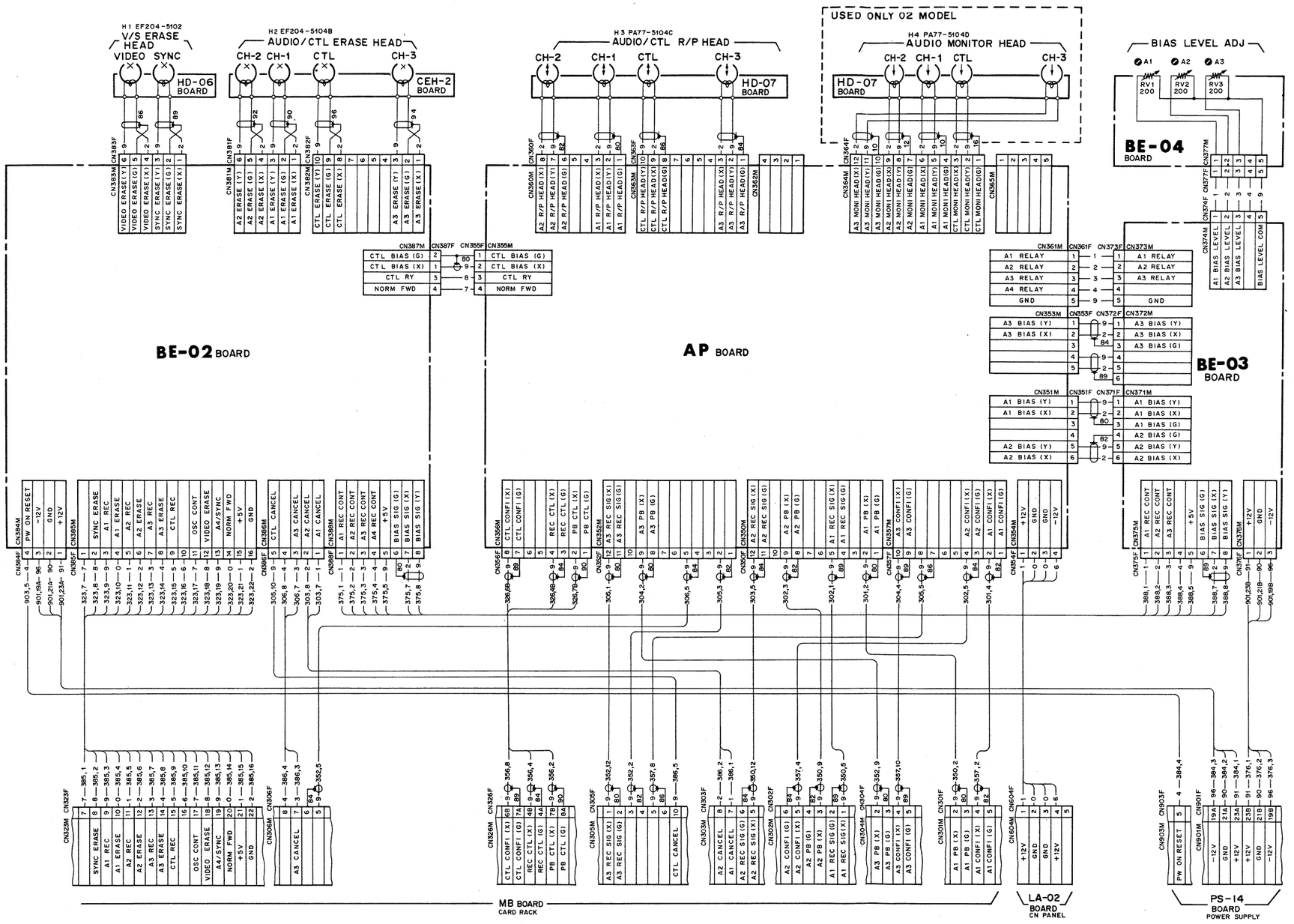

HD-06 BOARD (1-606-679-11)
Solder Side

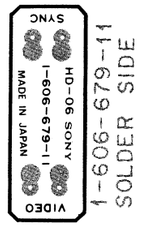

1-606-679-11
SOLDER SIDE

CEH-2 BOARD (1-588-946-12)
Solder Side

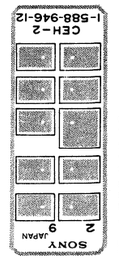

1-588-946-12
SOLDER SIDE

HD-07 BOARD (1-606-680-13)
Solder Side

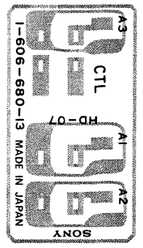

1-606-680-13
SOLDER SIDE

FRAME WIRING FOR BVH-2000/2180/PS/PM 00/10/02/12

TAPE TRANSPORT(2/2)

BVH-2000(J) ; # 10001 –
BVH-2000(U/C); # 10001 –
BVH-2000 PS ; # 10001 –
BVH-2000 PM ; # 10001 –

BVH-2180(J); # 10001 –
BVH-2180(U/C); # 10001 –
BVH-2180PS; # 10001 –
BVH-2180PM; # 10001 –

FRAME WIRING (2/2) **(FOR 04/14)** CEH-2, HD-6, HD-08 TAPE TRANSPORT

FRAME WIRING (2/2); TAPE TRANSPORT; FOR 04/14 MODEL

HD-06 BOARD; Video/Sync Erase Head
CEH-2 BOARD; Audio/CTL Erase Head
HD-08 BOARD; Audio/CTL R/P, Monitor Head

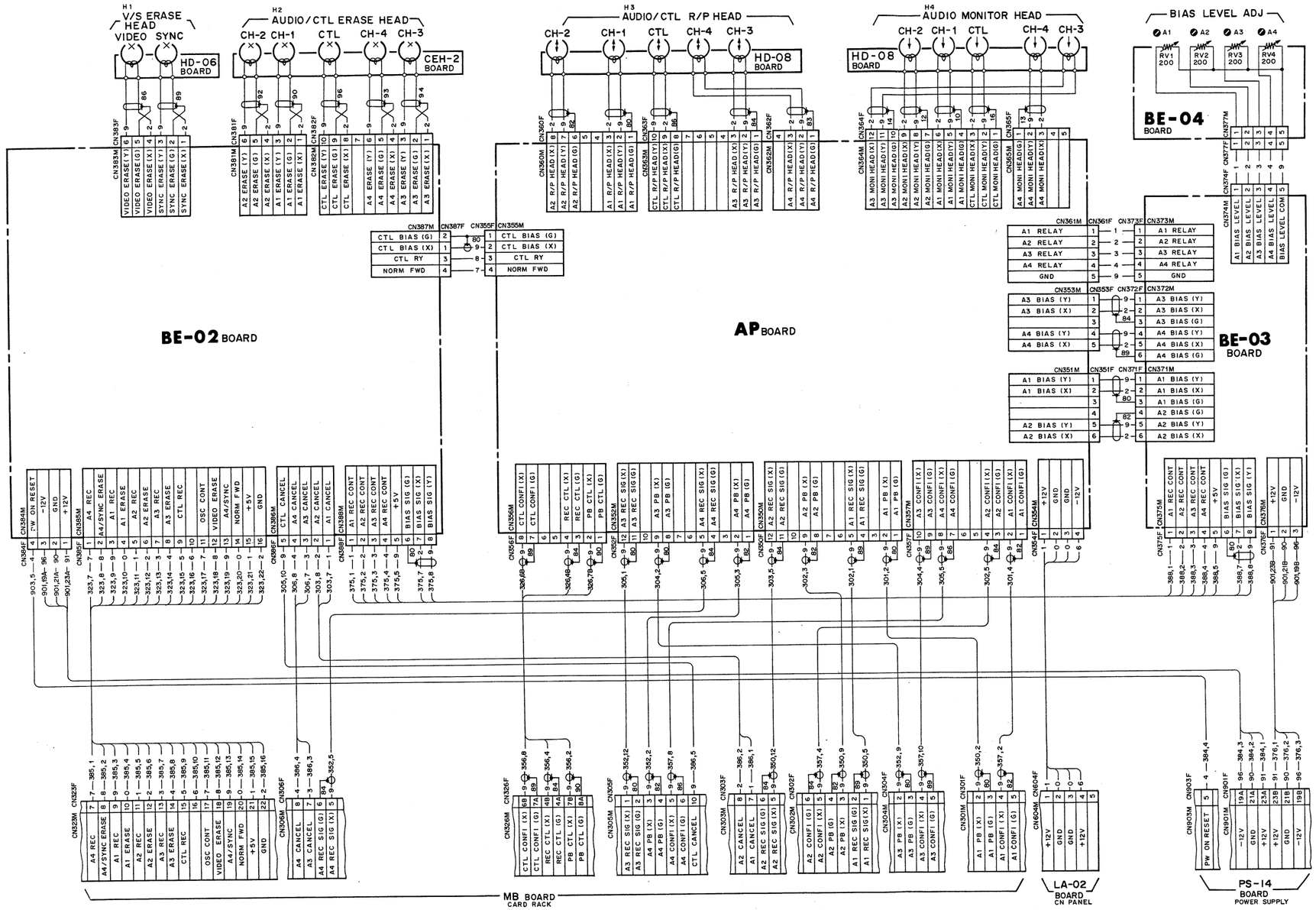

HD-06 BOARD (1-606-679-11)
Solder Side

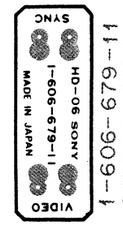

1-606-679-11
SOLDER SIDE

CEH-2 BOARD (1-588-946-11)
Solder Side

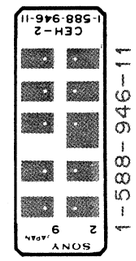

1-588-946-11
SOLDER SIDE

HD-08 BOARD (1-606-681-12)
Solder Side

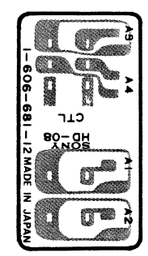

1-606-681-12
SOLDER SIDE

FRAME WIRING (FOR 04/14)
TAPE TRANSPORT(2/2)

BVH-2000PS;#10001-
BVH-2180PS;#10001-

VR-05 **(FOR 00/10/02/12)** LEVEL CONTROL PANEL

VR-05 **BOARD (1-606-677-13) ; FOR 00/10/02/12 MODEL**

Component Side

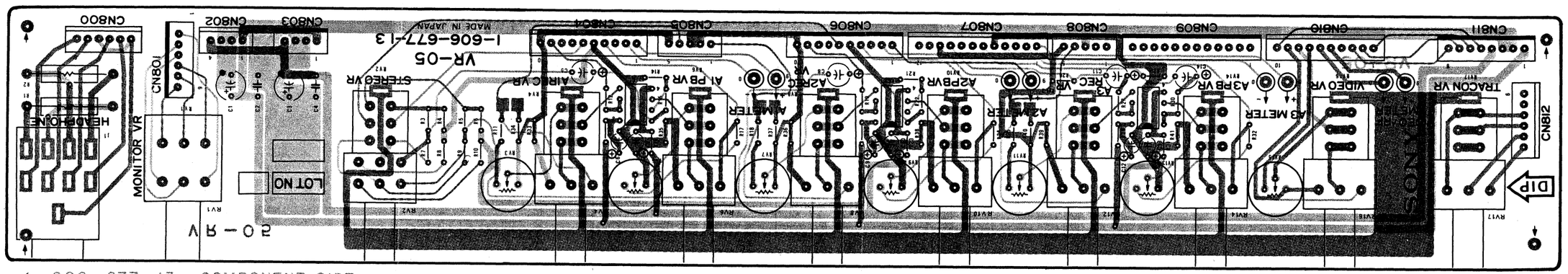

1 - 606 - 677 - 13 COMPONENT SIDE

1 - 606 - 677 - 13

VR-05 **(FOR 00/10/02/12)** LEVEL CONTROL PANEL

VR-05 BOARD; FOR 00/10/02/12 MODEL

Level Control/Indicator

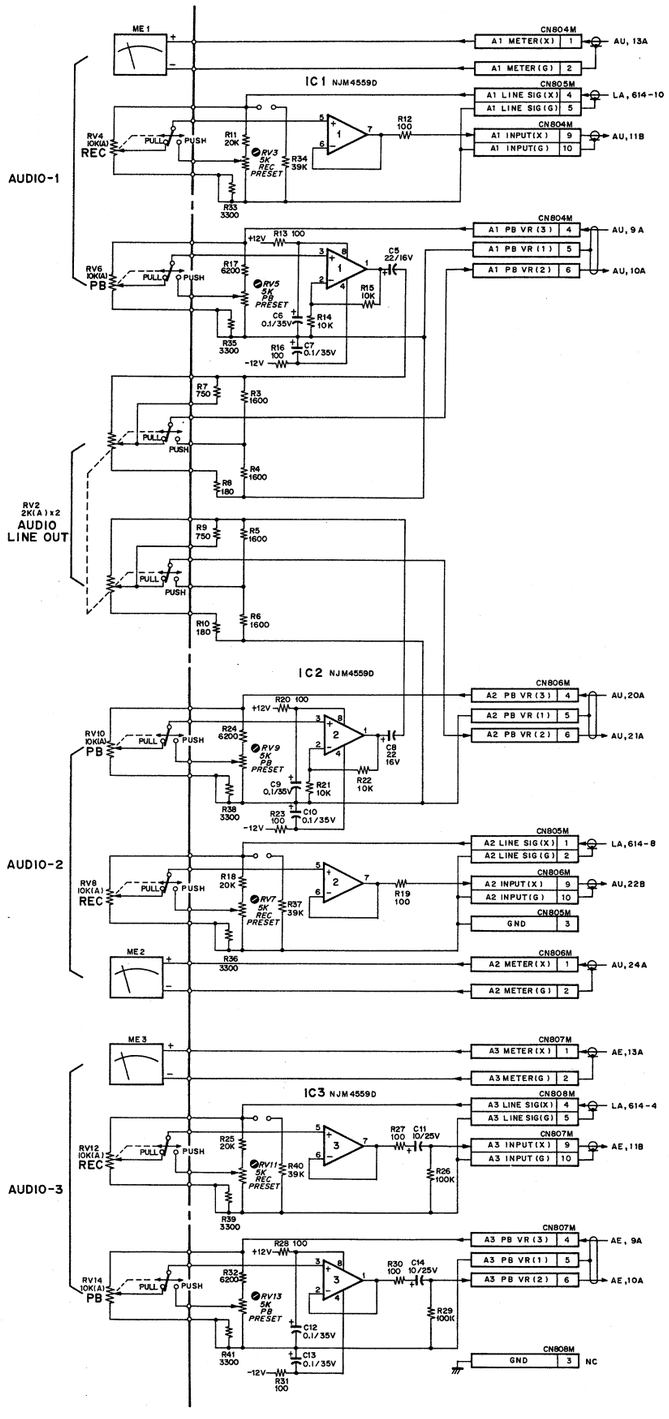

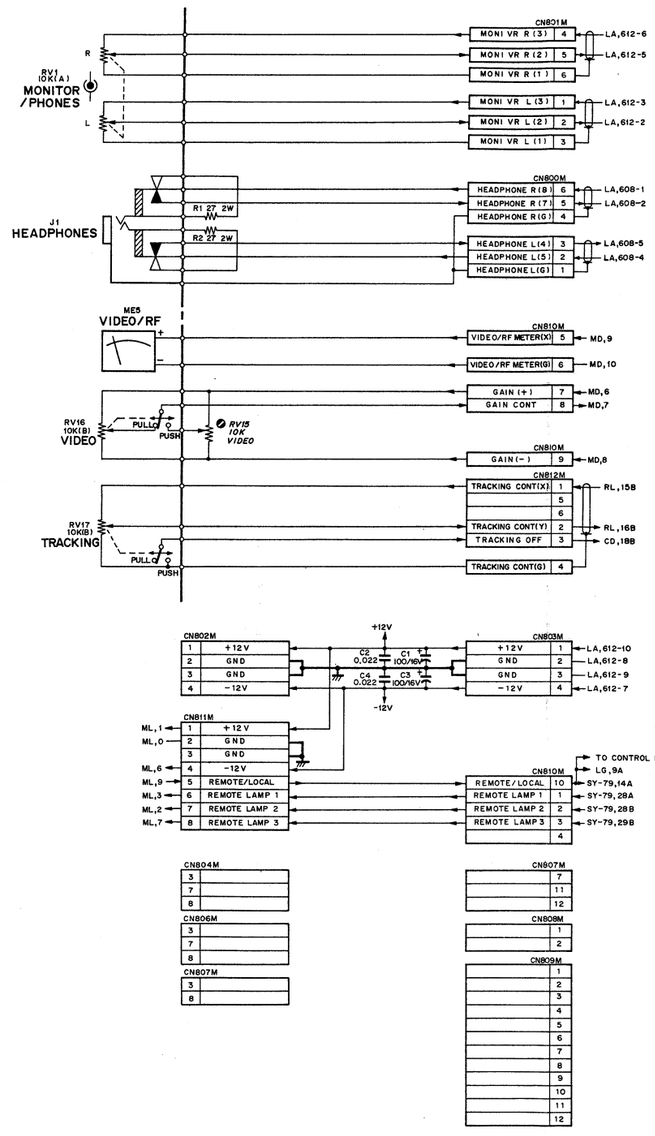

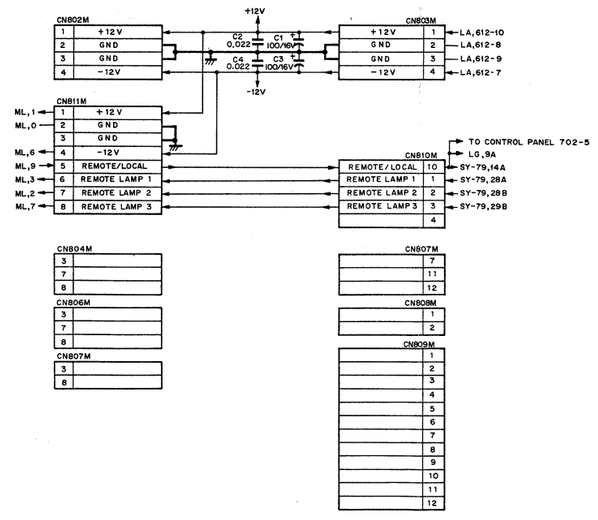

VR-05 BOARD FOR BVH-2000/PS/PM 00/10/02/12 MODEL, BVH-2180/PS/PM 00/02 MODEL & BVH-2500/P

BOARD NO 1-606-677-11/-12/-13 & UP

BVH-2000(J);	#10001-	BVH-2500(J);	#10001-
BVH-2000(U/C);	#10001-	BVH-2500(U/C);	#10001-
BVH-2000PS;	#10001-	BVH-2500P;	#10001-
BVH-2000PM;	#10001-		
BVH-2180(J);	#10001-		
BVH-2180(U/C);	#10001-		
BVH-2180PS;	#10001-		
BVH-2180PM;	#10001-		

VR-07 **(FOR 04/14)** LEVEL CONTROL PANEL

VR-07 **BOARD (1-606-678-11) ; FOR 04/14 MODEL**

Component Side

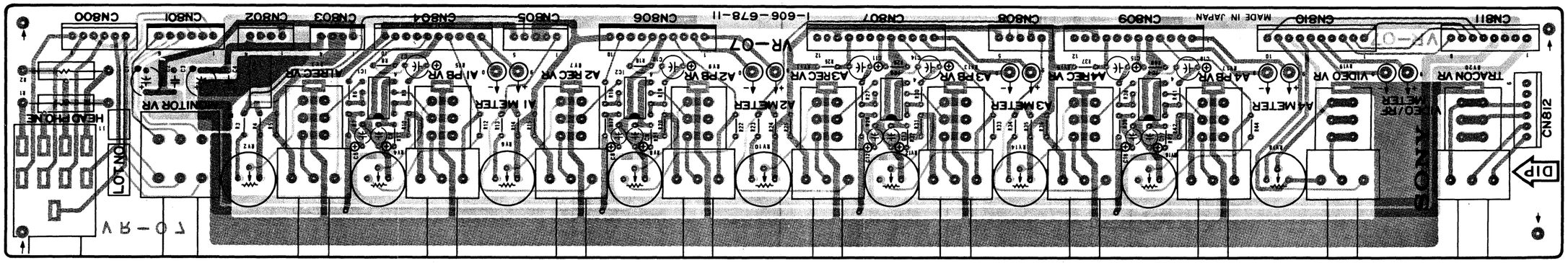

1-606-678-11 COMPONENT SIDE

1-606-678-11

VR-07 **(FOR 04/14)** LEVEL CONTROL PANEL

VR-07 **BOARD; FOR 04/14 MODEL**

Level Control/Indicator

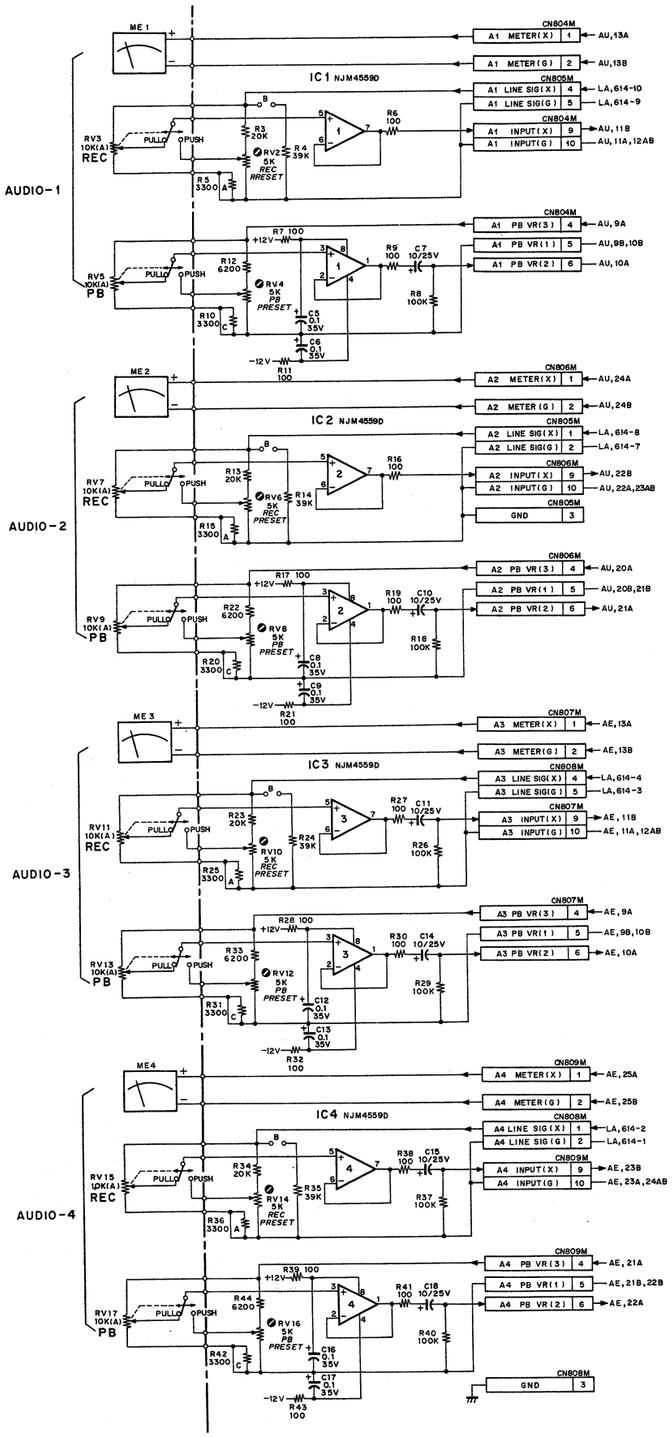

C-172(4/5)

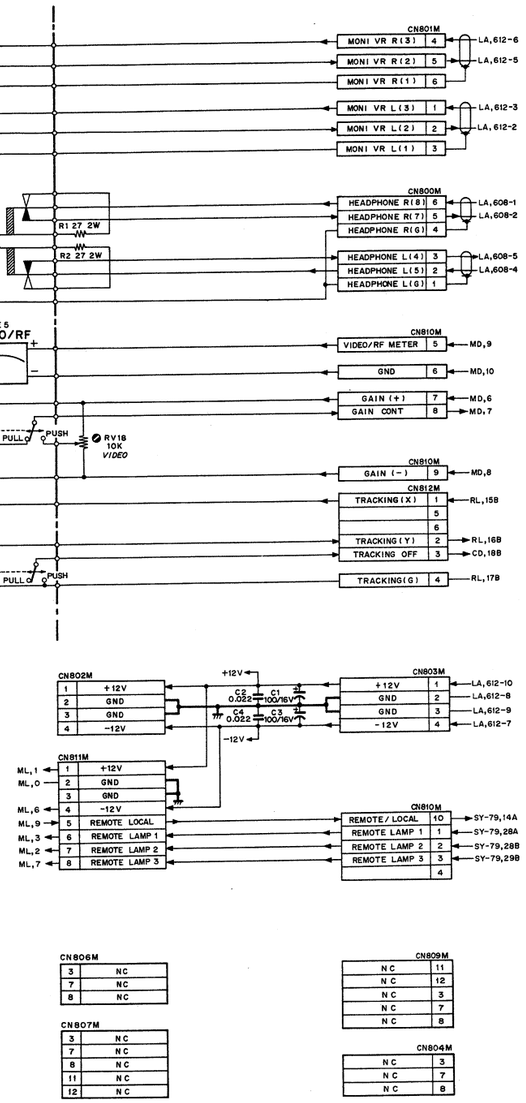

VR-07 BOARD (FOR 04/14)
BOARD NO. 1-606-678-11
BVH-2000PS; #10001-
BVH-2180PS; #10001-

C-172(5/5)

ML-02, MS-07 **(FOR 00/10/02/12)** LEVEL CONTROL PANEL

ML-02 **BOARD (1-606-711-11) ; FOR 00/10/02/12 MODEL**

Component Side

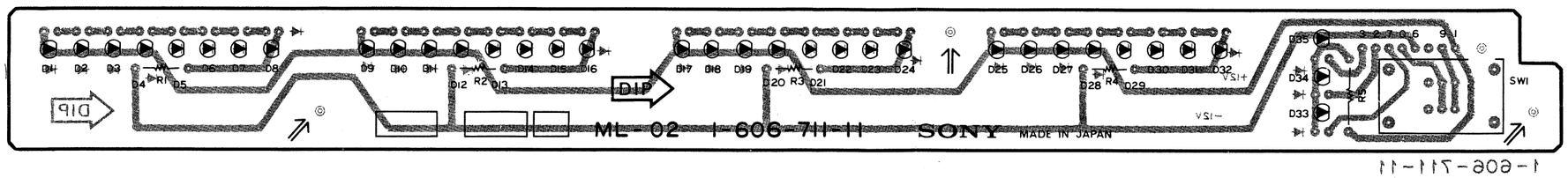

MS-07 **BOARD (1-606-709-11)**

Component Side

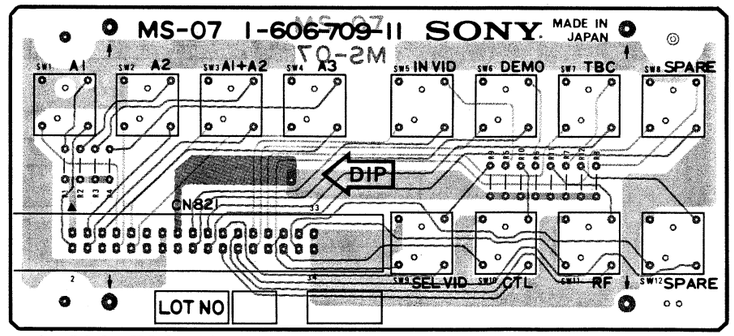

FRAME WIRING (FOR 00/10/02/12) ML-02, MS-07 LEVEL CONTROL PANEL

FRAME WIRING; LEVEL CONTROL PANEL; **FOR 00/10/02/12 MODEL**

ML-02 BOARD: Meter Lamp
MS-07 BOARD: Monitor Select

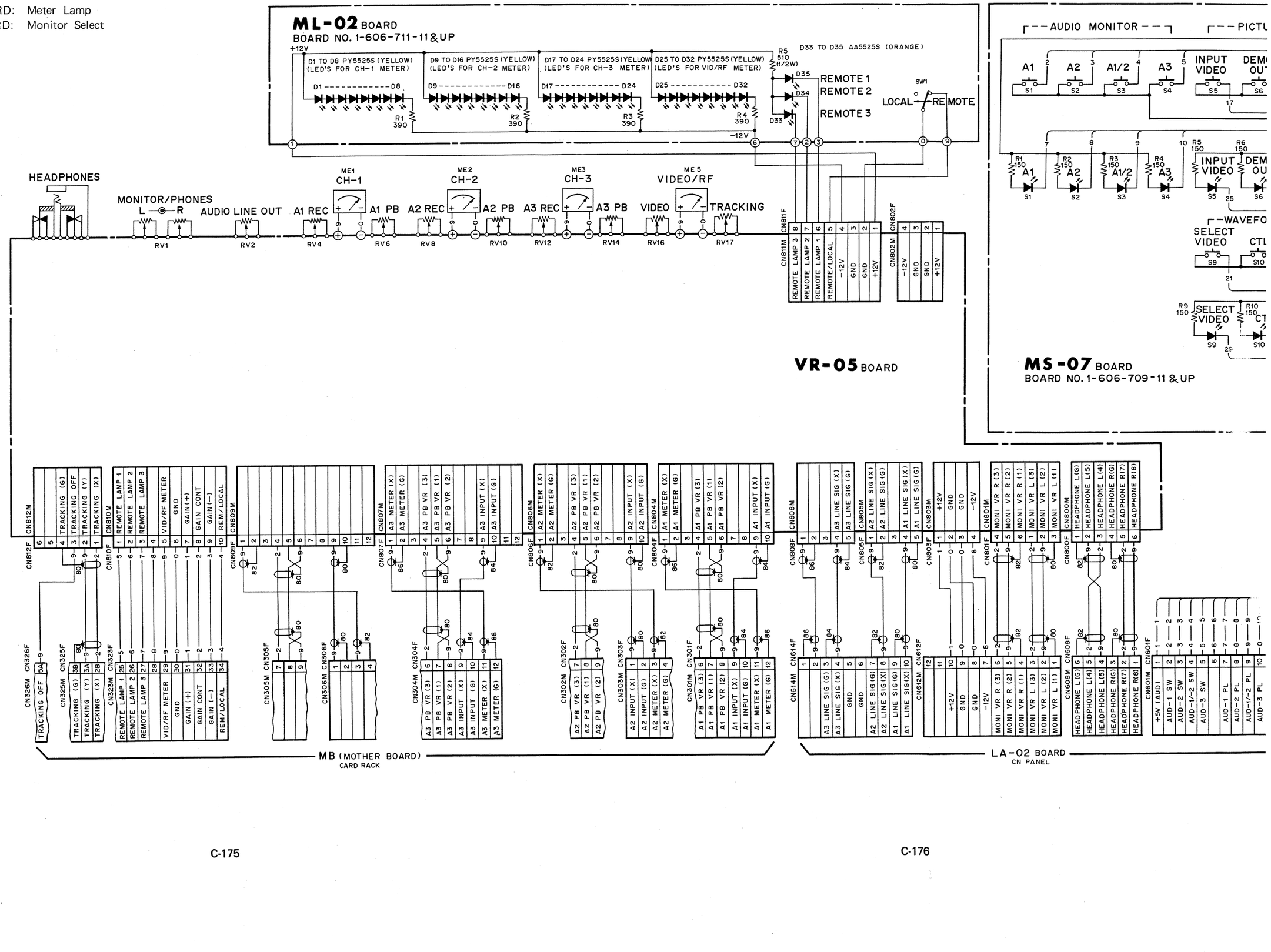

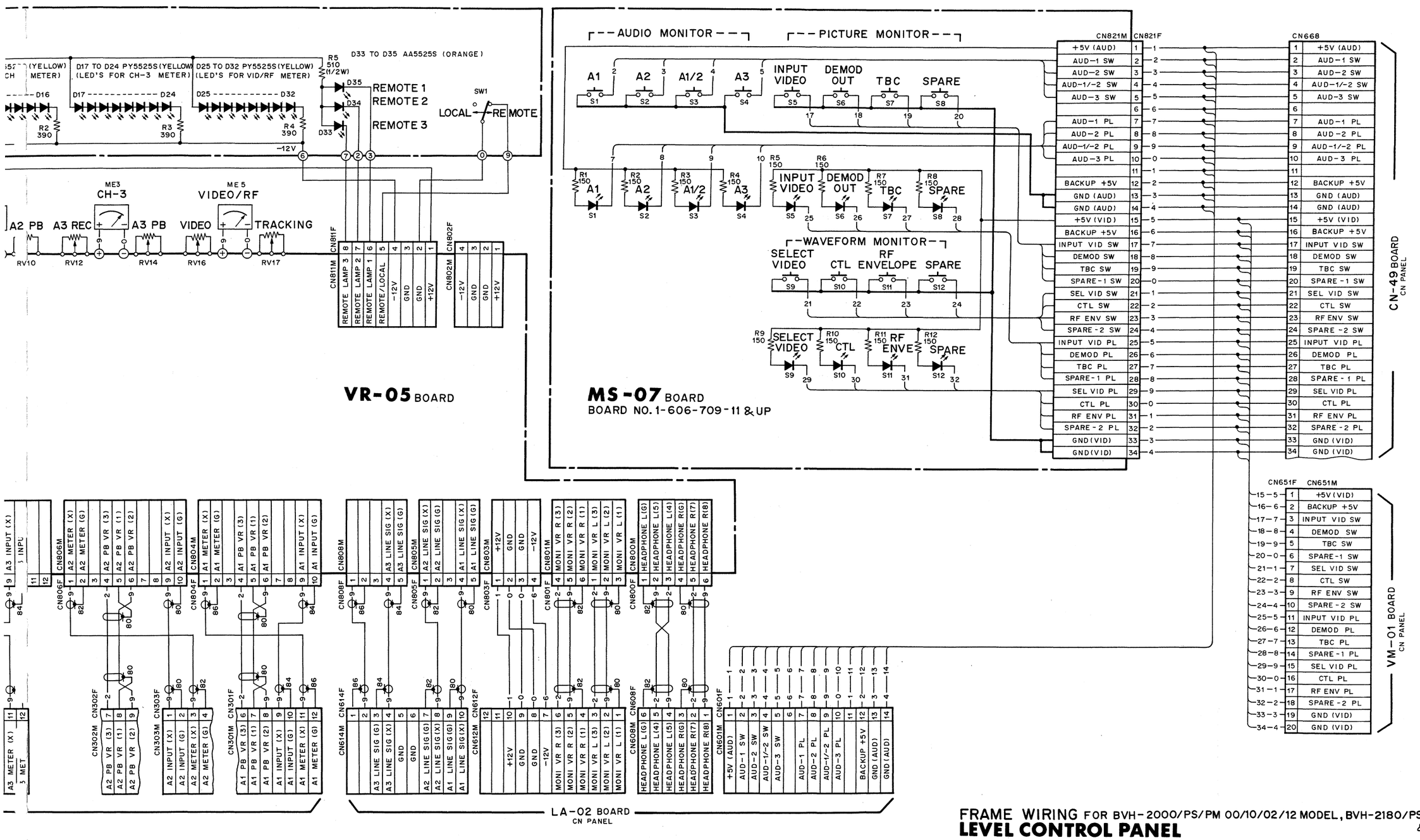

FRAME WIRING FOR BVH-2000/PS/PM 00/10/02/12 MODEL, BVH-2180/PS/PM 00/02 MODEL, & BVH-2500/P

LEVEL CONTROL PANEL

BVH-2000(J); #10001-
BVH-2000(U/C); #10001-
BVH-2000PS; #10001-
BVH-2000PM; #10001-

BVH-2180(J); #10001-
BVH-2180(U/C); #10001-
BVH-2180PS; #10001-
BVH-2180PM; #10001-

BVH-2500(J); #10001-
BVH-2500(U/C); #10001-
BVH-2500P; #10001-

ML-03 BOARD (1-606-712-11)

Component Side

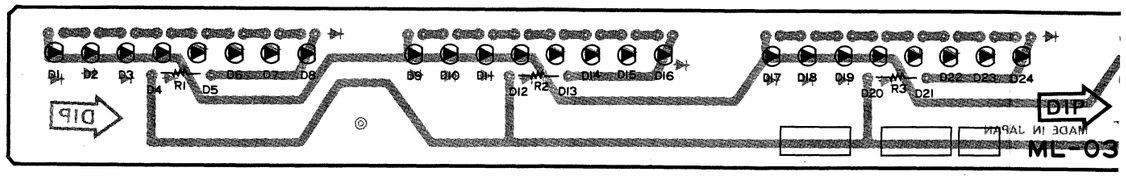

ML-03, MS-08 **(FOR 04/14)** LEVEL CONTROL PANEL

ML-03 **BOARD (1-606-712-11)**

Component Side

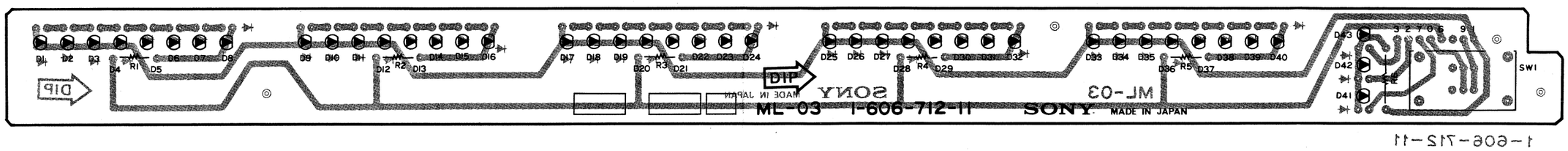

1-606-712-11

MS-08 **BOARD (1-606-710-11)**

Component Side

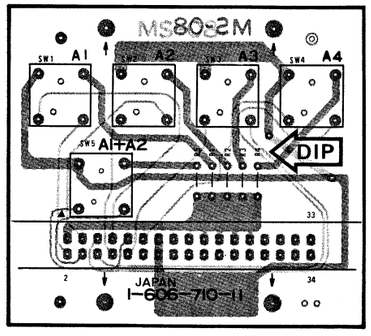

1-606-710-11
COMPONENT SIDE

ML-03, MS-08 (FOR 04/14) LEVEL CONTROL PANEL

FRAME WIRING; LEVEL CONTROL PANEL; **FOR 04/14 MODEL**

ML-03 BOARD; Meter Lamp

MS-08 BOARD; Monitor Select

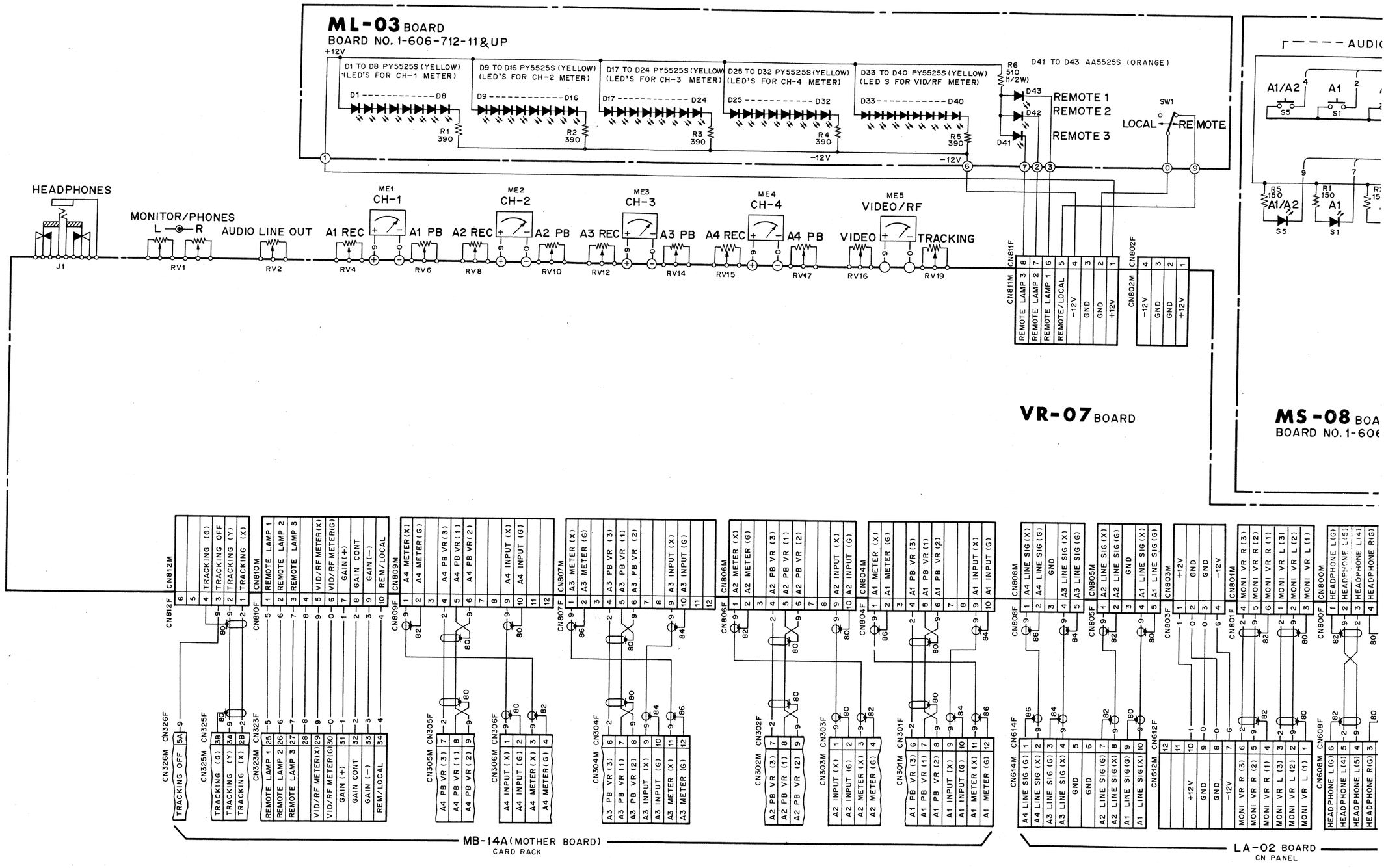

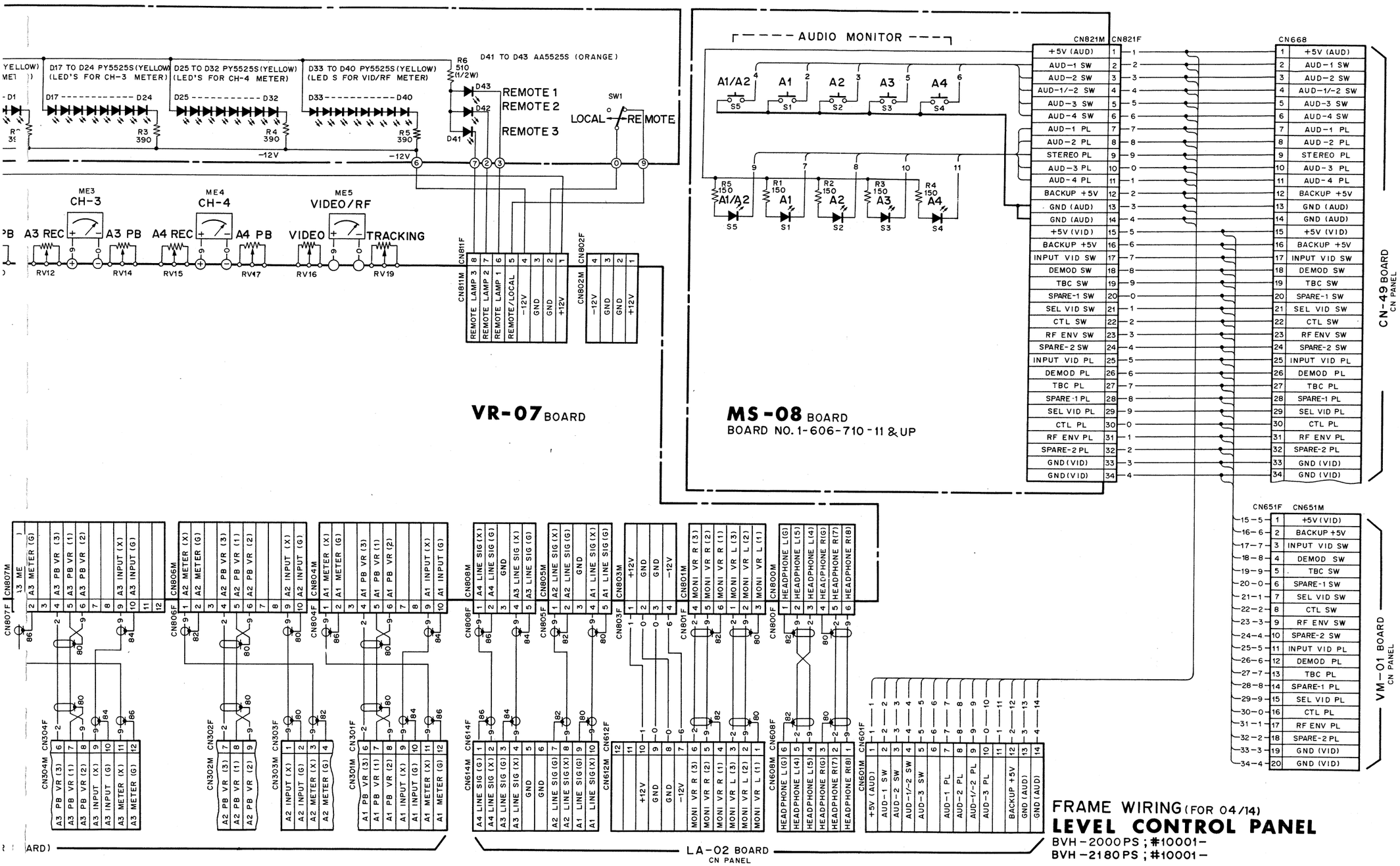

FRAME WIRING (FOR 04/14)

LEVEL CONTROL PANEL

BVH-2000PS ; #10001-

BVH-2180PS ; #10001-

AC-39 BOARD (1-607-587-13)

Solder Side

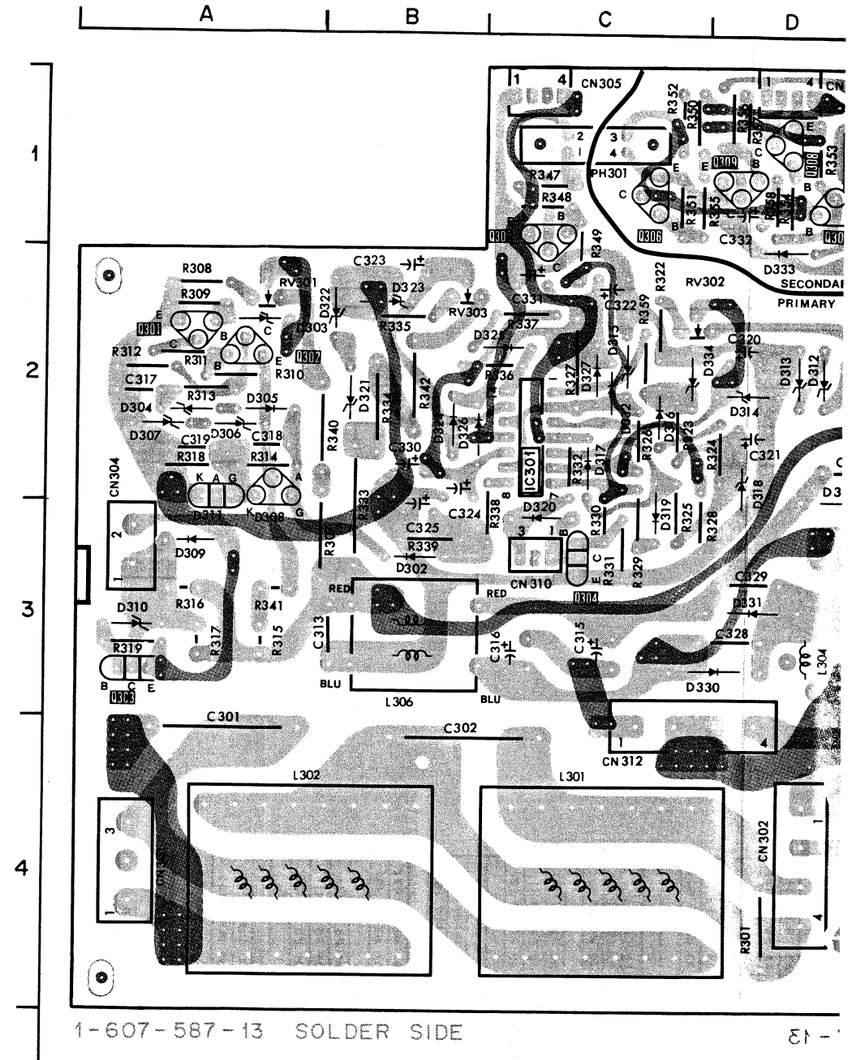

1-607-587-13 SOLDER SIDE

AC-39 BOARD (1-607-587-13)

Solder Side

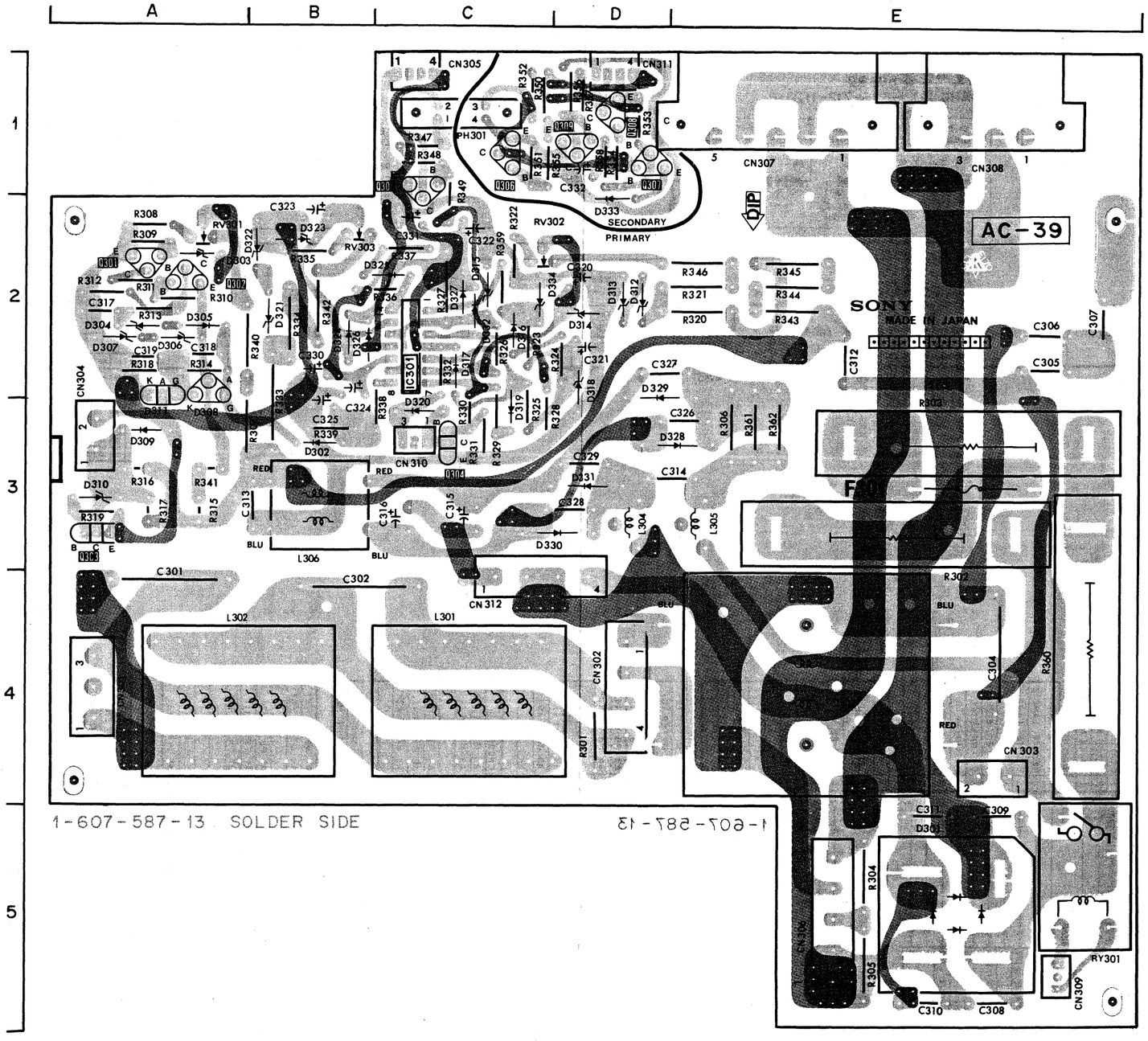

AC-39 (1-607-587-13 & UP)

BVH-2000/PS/PM
BVH-2180/PS/PM
BVH-2500/P

CN301F 4A
CN302F 4D
CN303M 4E
CN304F 3A
CN305M 1C
CN306M 5E
CN307M 1E
CN308M 1E
CN309M 5E
CN310M 3C
CN311M 1D
CN312M 4C

D301 5E
D302 3B
D303 2A
D304 2A
D305 2A
D306 2A
D307 2A
D308 2A
D309 3A
D310 3A
D311 2A
D312 2D
D313 2D
D314 2D
D315 2C
D316 2C
D317 2C
D318 2D
D319 3C
D320 3C
D321 2B
D322 2B
D323 2B
D324 2B
D325 2C
D326 2B
D327 2C
D328 3E
D329 2D
D330 3D
D331 3D
D332 2C
D333 2D
D334 2C

IC301 2C

PH301 1C

Q301 2A
Q302 2A
Q303 3A
Q304 3C
Q305 1C
Q306 1C
Q307 1D
Q308 1D
Q309 1D

RV301 2A
RV302 2C
RV303 2B

RY301 5E

AC-39 BOARD

Primary Rectifier

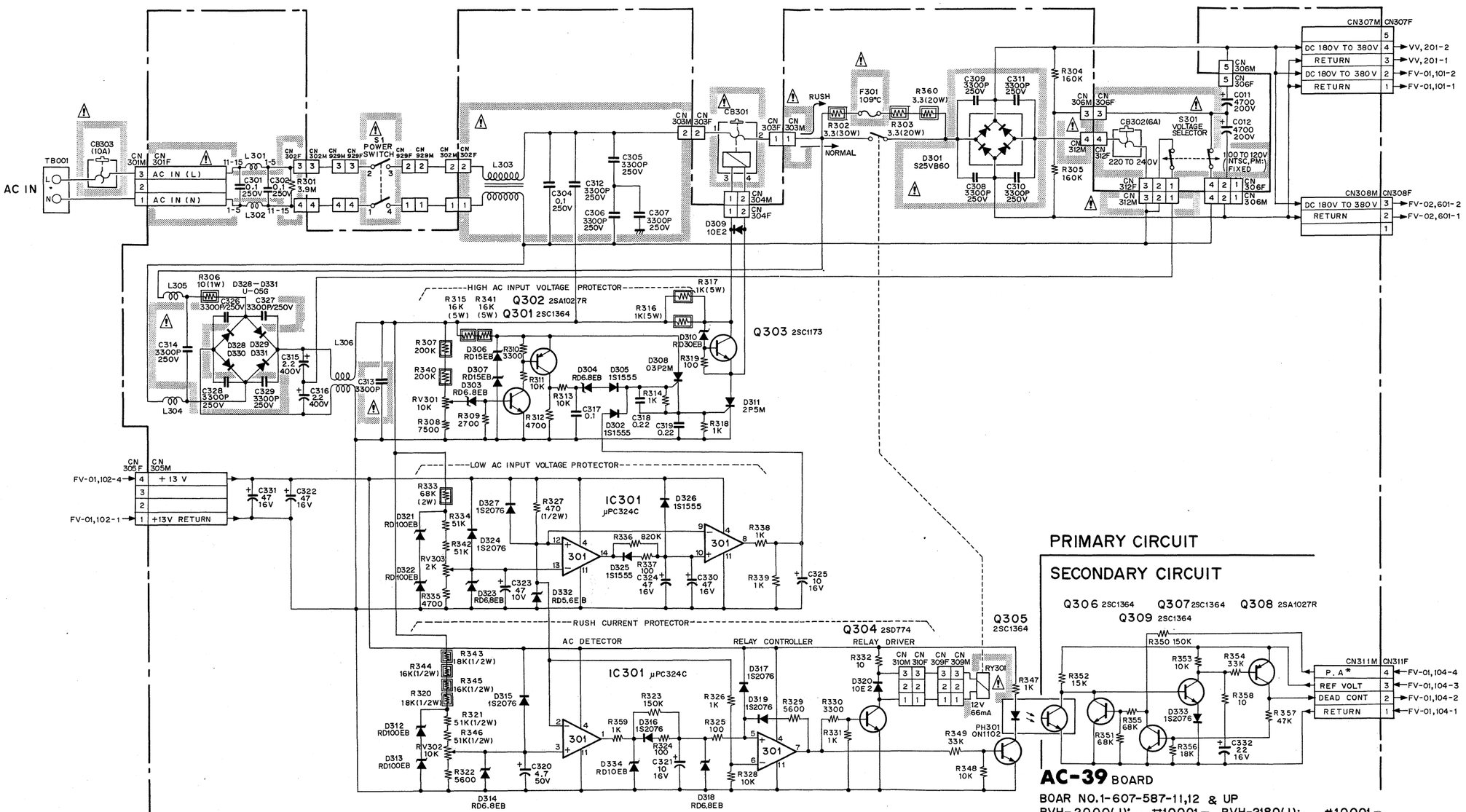

AC-39 BOARD

BOAR NO.1-607-587-11,12 & UP

BVH-2000(J);	#10001–	BVH-2180(J);	#10001–
BVH-2000(U/C);	#10001–	BVH-2180(U/C);	#10001–
BVH-2000PS;	#10001–	BVH-2180PS;	#10001–
BVH-2000PM,	#10001–	BVH-2180PM;	#10001–
BVH-2500(J);	#10001–		
BVH-2500(U/C);	#10001–		
BVH-2500P;	#10001–		

CT-36-2 BOARD
(1-607-591-23)
Solder Side

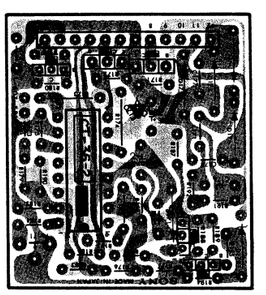

1-607-591-23
SOLDER SIDE

CT-36-3 BOARD
(1-607-591-33)
Solder Side

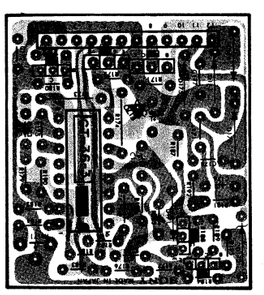

1-607-591-33
SOLDER SIDE

FV-02 BOARD
(1-607-590-12)
Solder Side

FV-03 BOARD
(1-607-597-14)
Solder Side

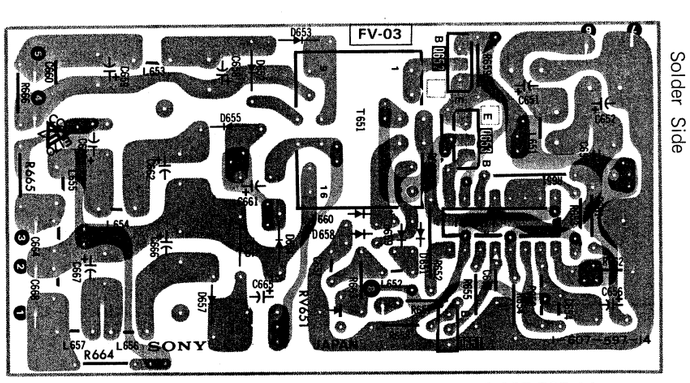

■ 1-607-597-14
SOLDER SIDE

1-607-597-14
COMPONENT SIDE

C-183

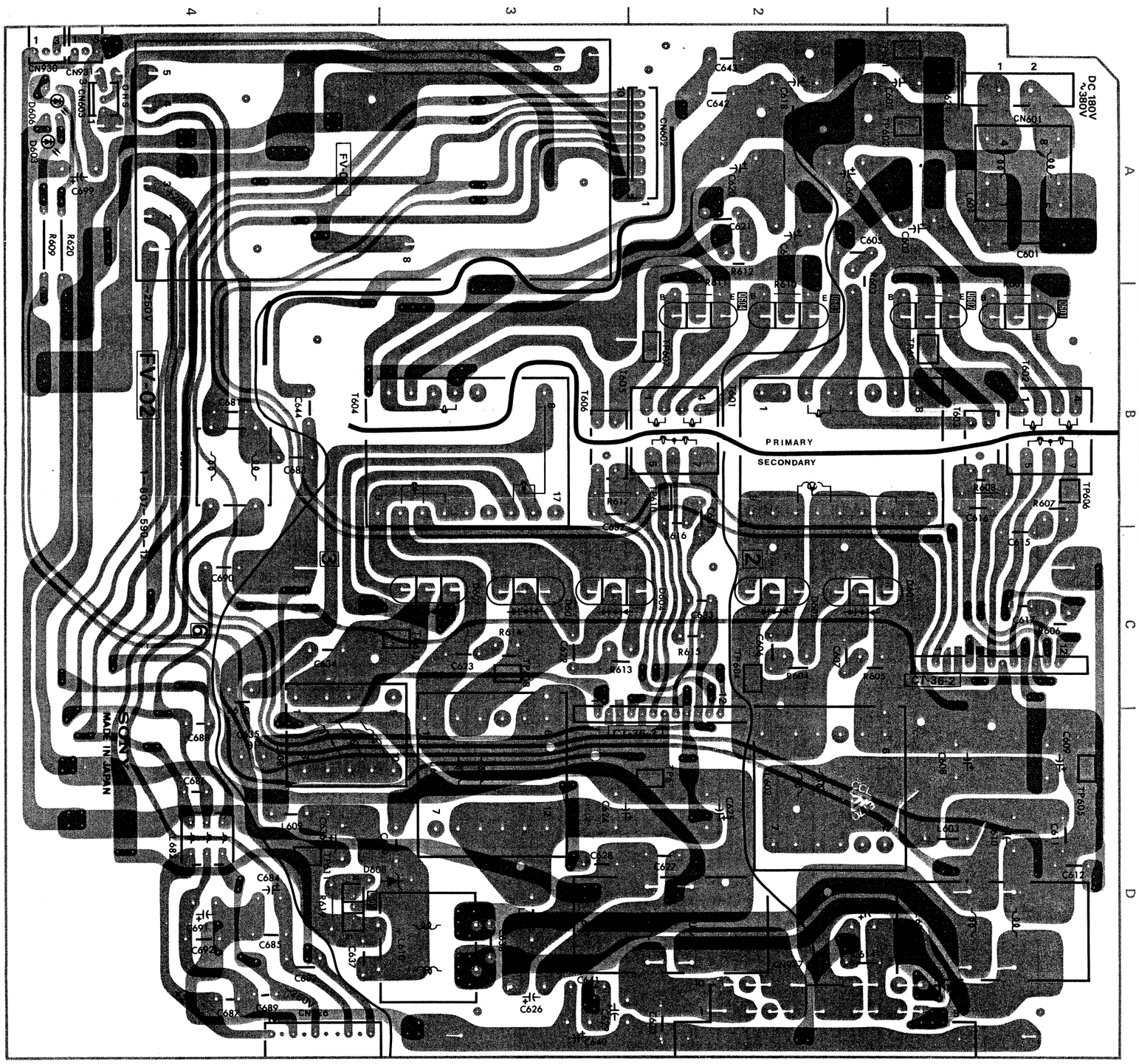

■ 1-607-590-12 SOLDER SIDE

■ 1-607-590-12 COMPONENT SIDE

C-184

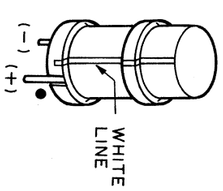

FV-02 (1-607-590-11 & up)

BVH-2000/PS/PM	
BVH-2180/PS/PM	
BVH-2500/P	
CN601M	1A
CN602M	2A
CN603M	4A
CN926M	4A
CN927M	4D
CN930M	2D
CN931M	4A
	4A
	4C
D601	2C
D602	2C
D603	4A
D604	3C
D605	3C
D606	4A
D607	3C
D608	3D
Q601	1B
Q602	1B
Q603	2B
Q604	2B
Q605	4D
S601	4C
S602	4C
TP601	1A
TP602	1A
TP603	1B
TP604	2C
TP605	1D
TP606	3D
TP607	3D
TP608	3C
TP609	2D
TP610	2B
TP611	4D
TP612	3C

FV-02 BOARD

Switching Regulator

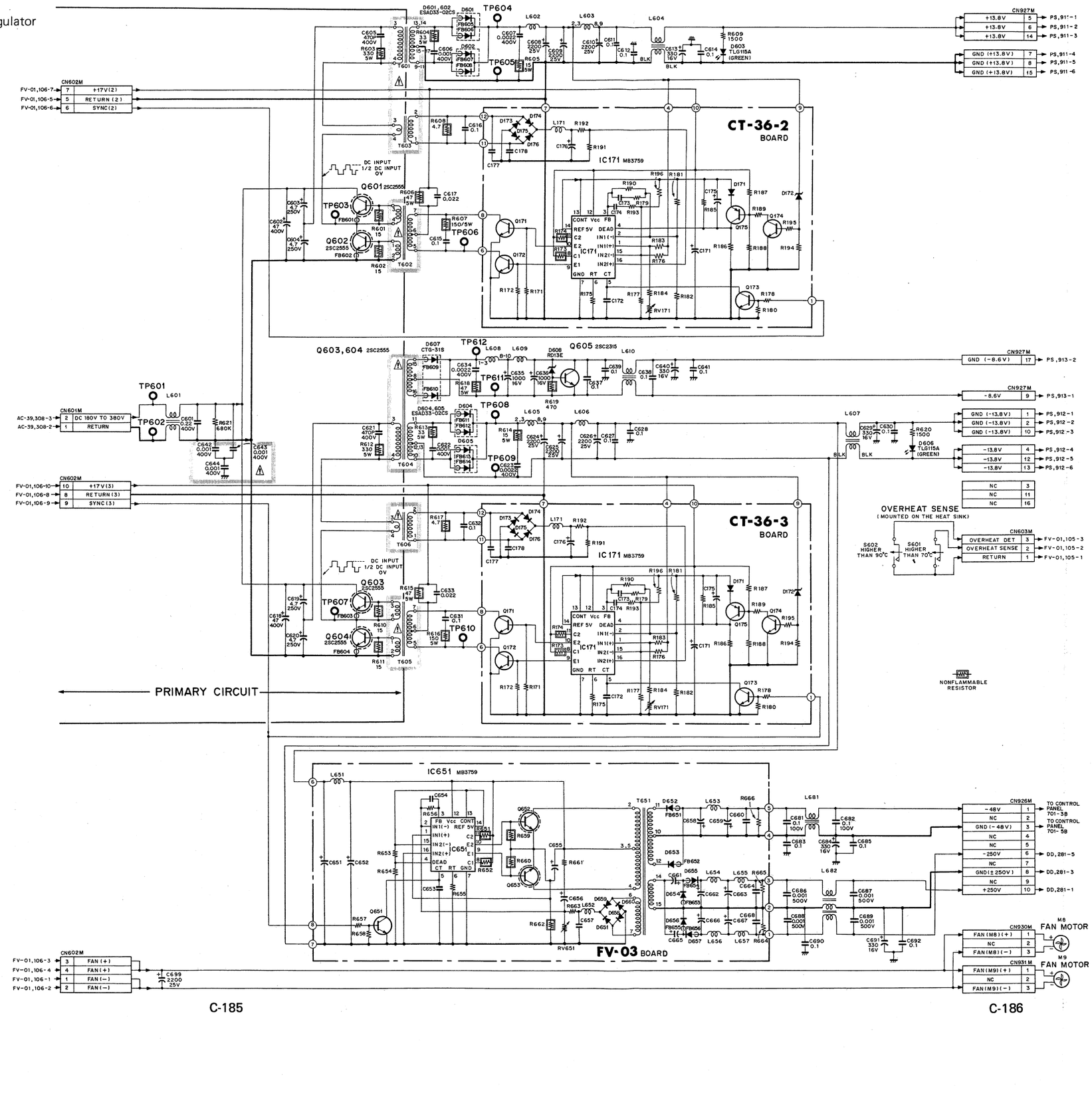

FV-02 BOARD
BOARD NO. 1-607-590-11 & UP

BVH-2000(J);	#10001-	BVH-2500(J);	#10001-
BVH-2000(U/C);	#10001-	BVH-2500(U/C);	#10001-
BVH-2000PS;	#10001-	BVH-2500P;	#10001-
BVH-2000PM;	#10001-		
BVH-2180(J);	#10001-		
BVH-2180(U/C);	#10001-		
BVH-2180PS;	#10001-		
BVH-2180PM;	#10001-		

CT-36-7 BOARD
(1-607-591-53)
Solder Side

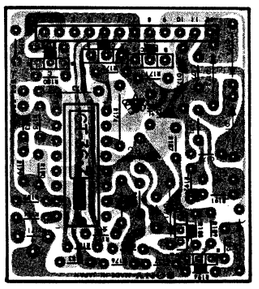

1-607-591-53
SOLDER SIDE

VV-01 BOARD
(1-607-589-13)
Solder Side

CT-37 BOARD
(1-607-592-13)
Solder Side

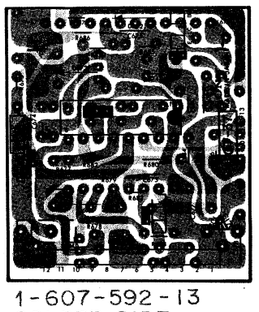

1-607-592-13
SOLDER SIDE

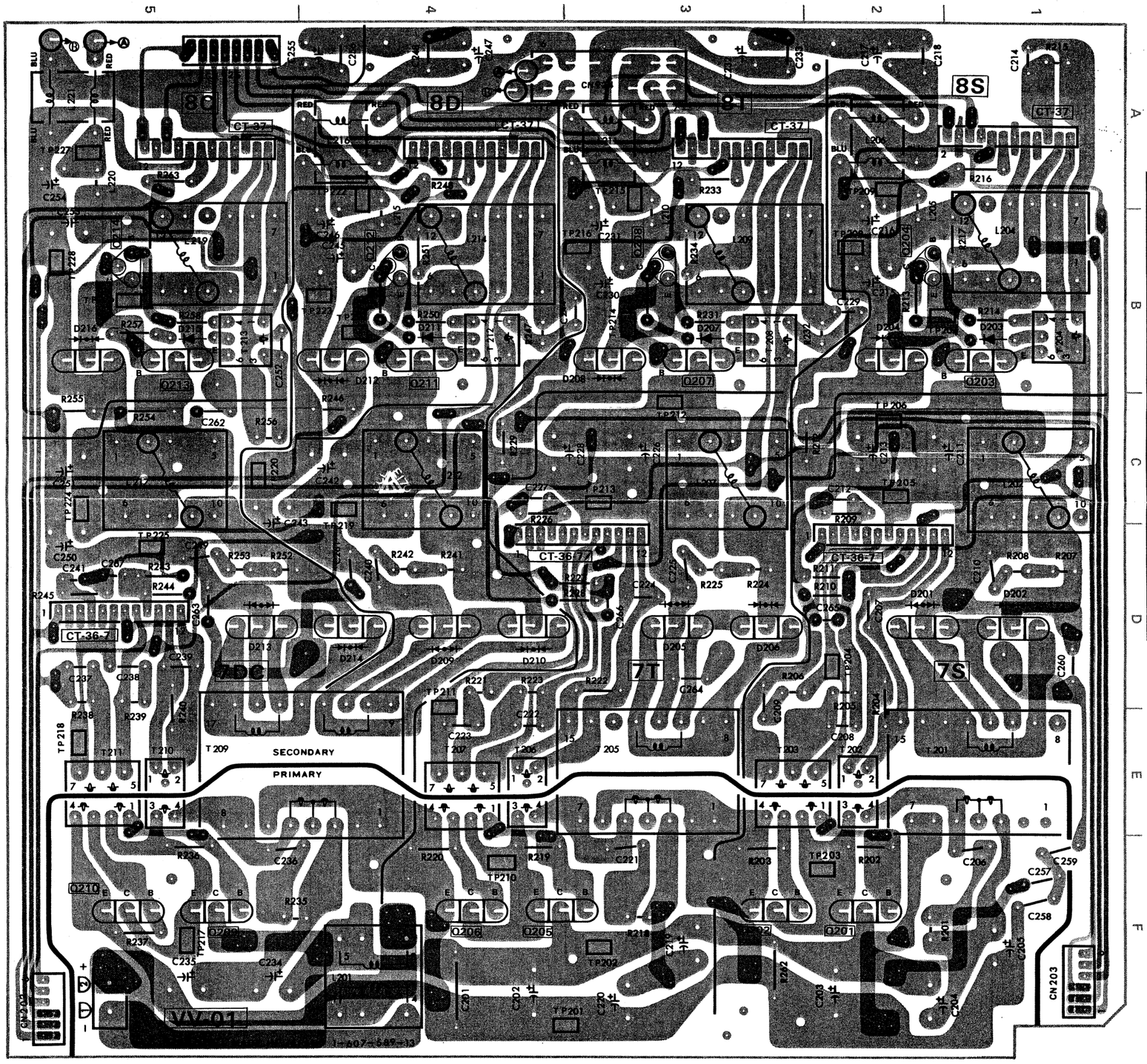

■ 1-607-589-13 SOLDER SIDE

■ 1-607-589-13 COMPONENT SIDE

TP201	3F
TP202	3F
TP203	2F
TP204	2D
TP205	2C
TP206	2C
TP207	2B
TP208	2B
TP209	4F
TP210	4F
TP211	4D
TP212	3C
TP213	3C
TP214	3B
TP215	3A
TP216	3B
TP217	5F
TP218	5E
TP219	4C
TP220	4C
TP221	4B
TP222	4A
TP223	4B
TP224	5C
TP225	5D
TP226	5B
TP227	5A
TP228	5B

Q201	2F
Q202	3F
Q203	1B
Q204	2B
Q205	3F
Q206	4F
Q207	3B
Q208	3B
Q209	5F
Q210	5F
Q211	4B
Q212	4B
Q213	4B
Q214	5B

D201	2D
D202	1D
D203	1B
D204	2B
D205	3D
D206	3D
D207	3B
D208	3B
D209	4D
D210	4D
D211	4B
D212	4B
D213	5D
D214	4D
D215	5B
D216	5B

CN925M	5A
CN924M	3A
CN203M	1F
CN202M	5F
CN201M	5F

BVH-2000/PS/PM
BVH-2180/PS/PM
BVH-2500/P

VV-01 (1-607-589-12 & up)

VV-01 BOARD ; Switching Regulator

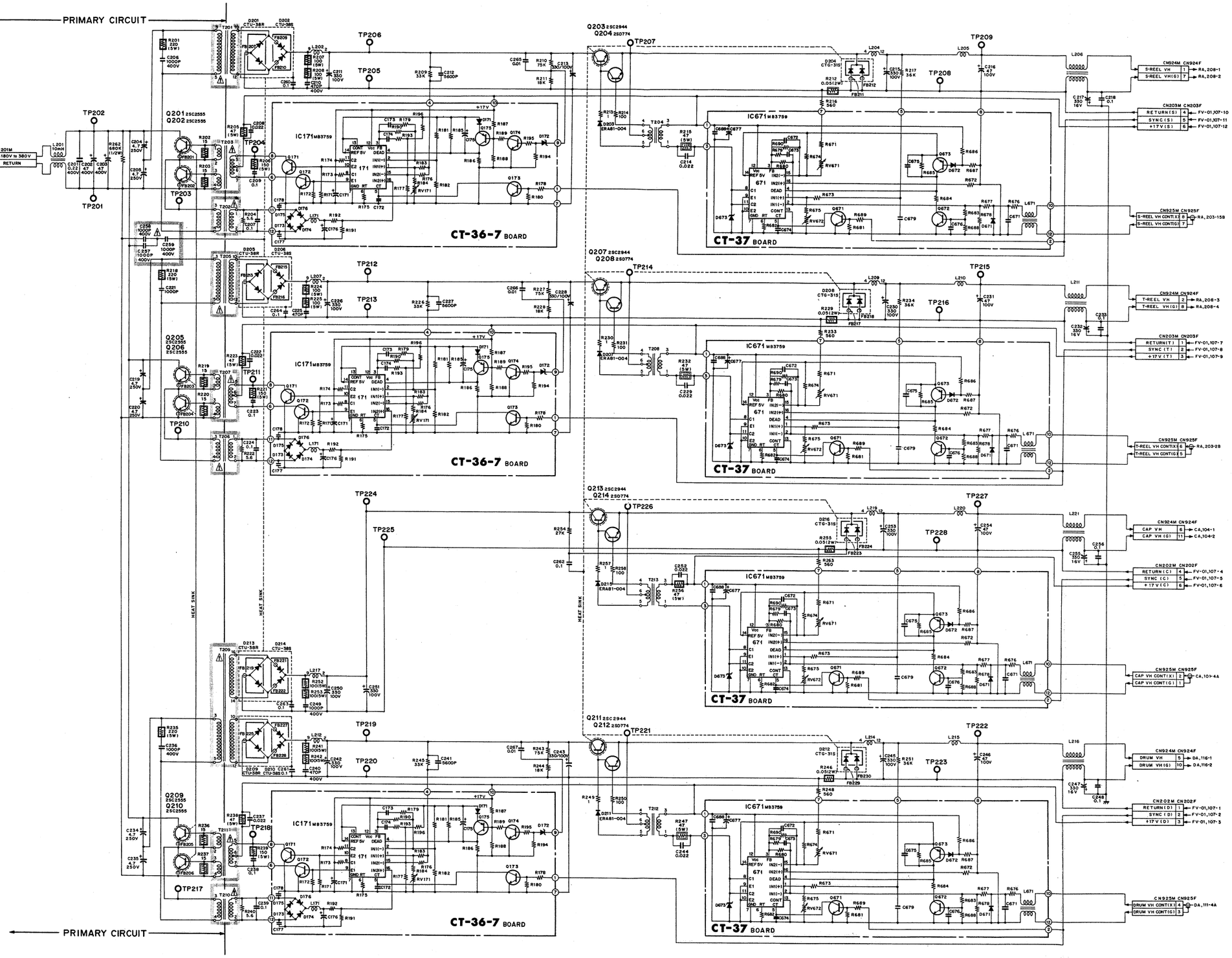

VV-01 BOARD
BOARD NO. 1-607-589-11 & UP
BVH-2000(J); #10001-
BVH-2000(U/C) #10001-
BVH-2000PS; #10001-
BVH-2000PM; #10001-
BVH-2180(J); #10001-
BVH-2180(U/C); #10001-
BVH-2180PS; #10001-
BVH-2180PM; #10001-
BVH-2500(J); #10001-
BVH-2500(U/C); #10001-
BVH-2500P; #10001-

FV-01 (1-607-588-11 & UP)

BVH-2000/PS/PM
BVH-2180/PS/PM
BVH-2500/P

CN101M 6F
CN102M 4F
CN103M 3F
CN104M 3F
CN105M 2F
CN106M 2F
CN107M 2F
CN921M 2A
CN922F 4A
CN923M 5A
CN928M 2A

D101 5D
D102 5D
D103 3D
D104 3D
D105 4D
D106 4C
D107 3C
D108 3E
D109 2B
D110 2B
D111 2B
D113 2B
D114 2B
D115 2B
D116 2B
D117 2B
D118 2B
D119 2B
D120 2B
D121 1C
D122 1C
D123 1C
D124 1C
D125 1C
D126 1C
D127 1C
D128 1C
D129 1C
D130 1C
D131 1C
D133 1C
D134 1D
D135 1D
D136 2D
D137 2D
D138 2D
D139 2D
D140 2D
D141 2D
D142 2D
D144 2D
D145 2E
D146 2E
D147 3F
D148 4F
D149 6A
D150 6A
D151 3F
D152 2C
D153 3A
D154 5F

IC101 1A
IC102 1A

Q101 6E
Q102 5E
Q103 3E
Q104 3E
Q105 2D
Q106 2D
Q107 1A
Q108 6A
Q109 6A
Q110 6A
Q111 6A
Q112 5F
Q113 3A

RT101 2A
RT102 2A

S101 4D
S102 6D

TP101 5F
TP102 5F
TP103 5E
TP104 5E
TP105 3E
TP106 6C
TP107 6D
TP108 5C
TP109 4C
TP110 3C
TP111 3C
TP112 3C
TP113 2C
TP115 2B
TP116 4D

■ 1-607-588-12 SOLDER SIDE

■ 1-607-588-12 COMPONENT SIDE

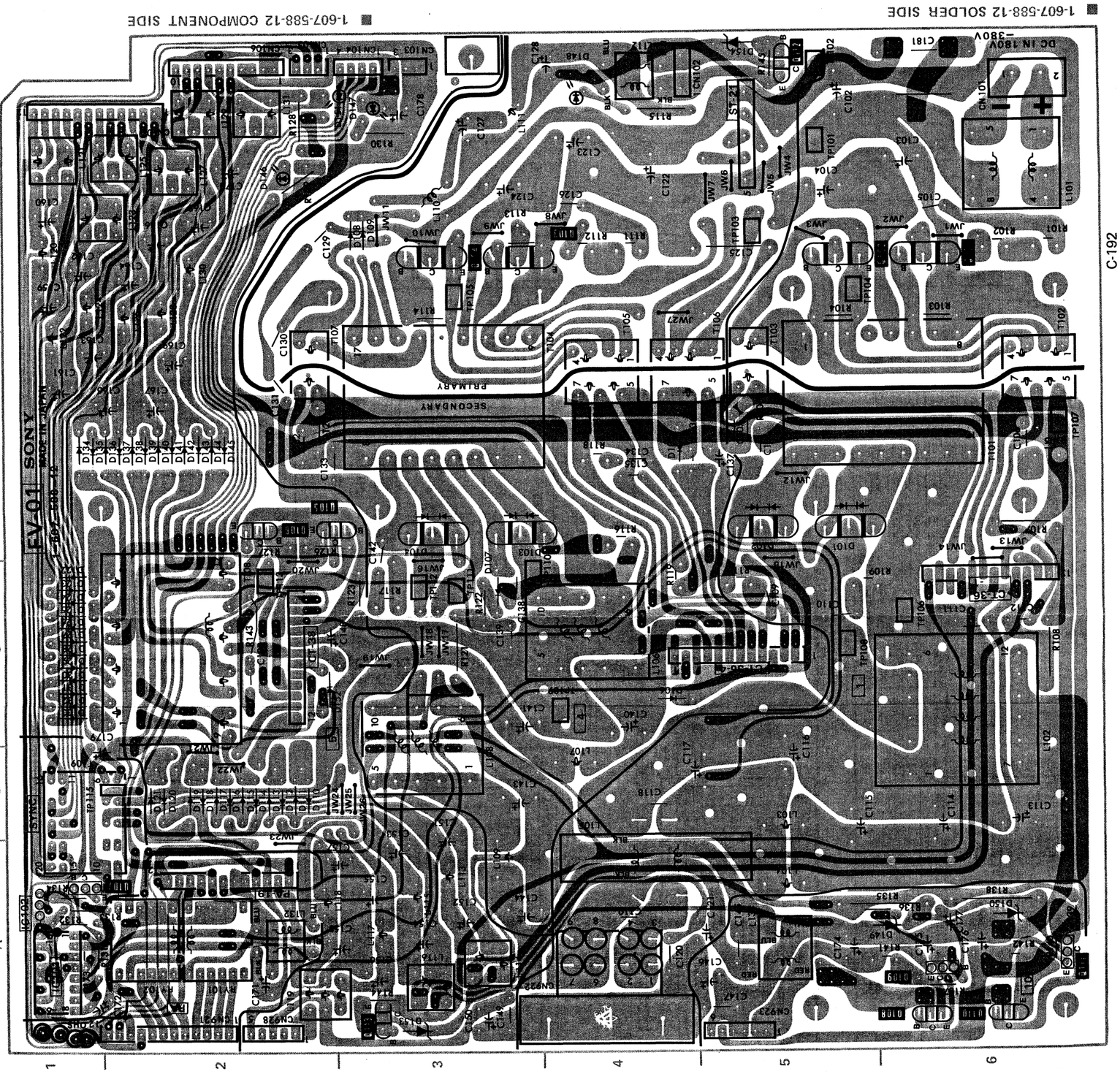

C-192

PA-19 BOARD
(1-607-594-14)
Solder Side

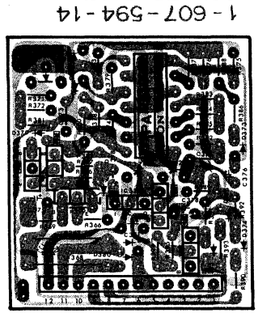

1-607-594-14
SOLDER SIDE
PA-19

CT-38 BOARD
(1-607-593-13)
Solder Side

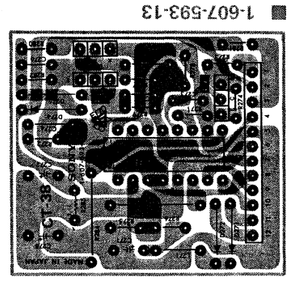

■ 1-607-593-13
SOLDER SIDE
■ 1-607-593-13
COMPONENT SIDE

ST-21 BOARD
(1-607-595-13)
Solder Side

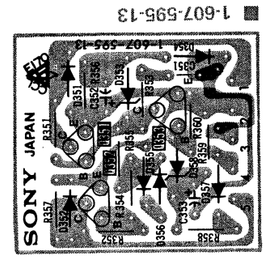

■ 1-607-595-13
SOLDER SIDE
■ 1-607-595-13
COMPONENT SIDE

L103,104

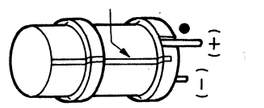

CT-36-1 BOARD
(1-607-591-13)
Solder Side

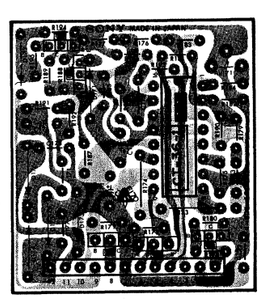

1-607-591-13
SOLDER SIDE
CT-36-1

CT-36-4 BOARD
(1-607-591-43)
Solder Side

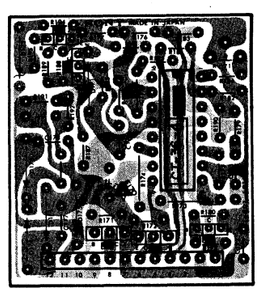

1-607-591-43
SOLDER SIDE
CT-36-4

FV-01 BOARD

Switching Regulator

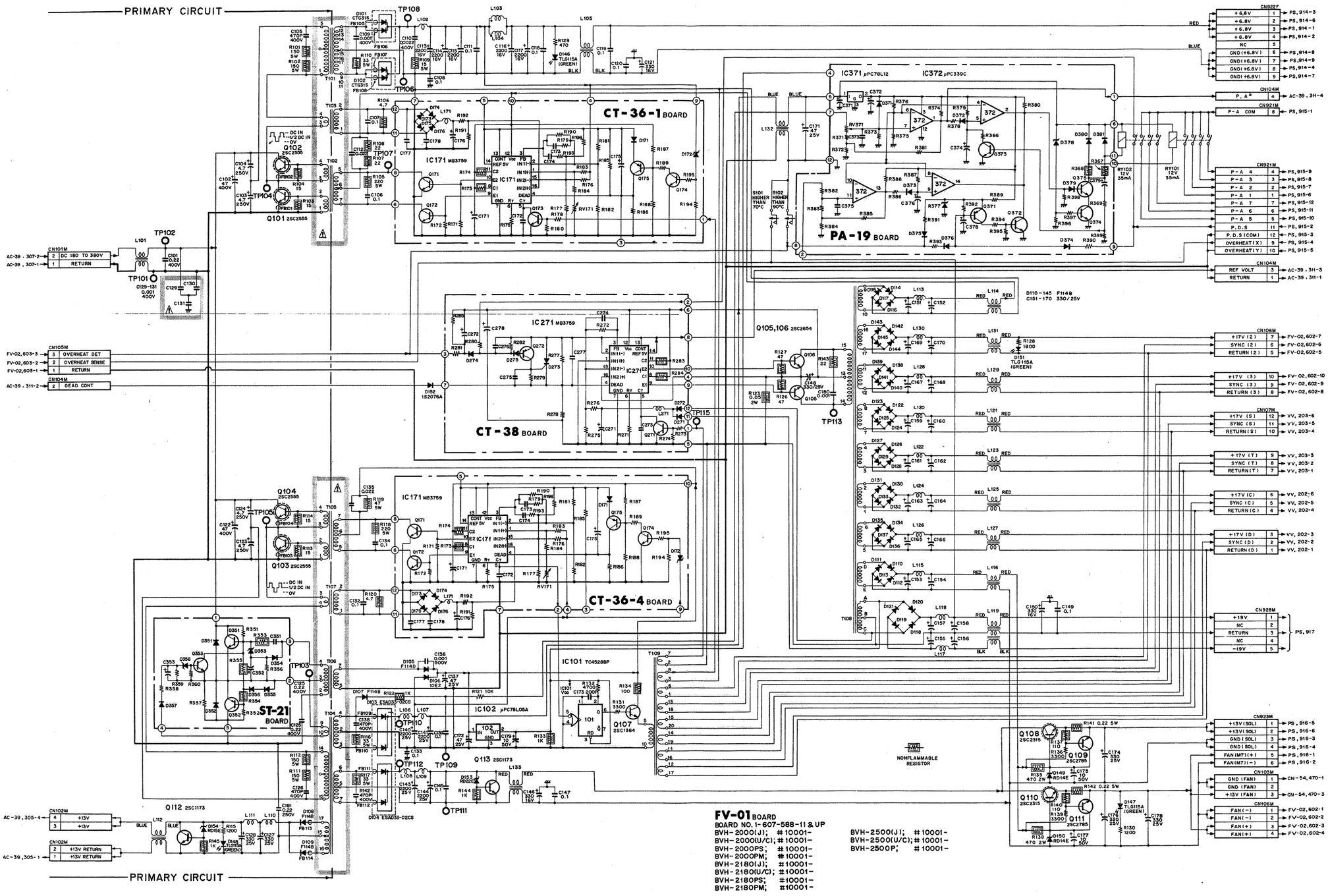

FV-01 BOARD
BOARD NO. 1-607-588-11 & UP

BVH-2000(J);	#10001-	BVH-2500(J);	#10001-
BVH-2000(U/C);	#10001-	BVH-2500(U/C);	#10001-
BVH-2000PS;	#10001-	BVH-2500P;	#10001-
BVH-2000PM;	#10001-		
BVH-2180(J);	#10001-		
BVH-2180(U/C);	#10001-		
BVH-2180PS;	#10001-		
BVH-2180PM;	#10001-		

PS-14 BOARD (1-606-716-13)

Component Side

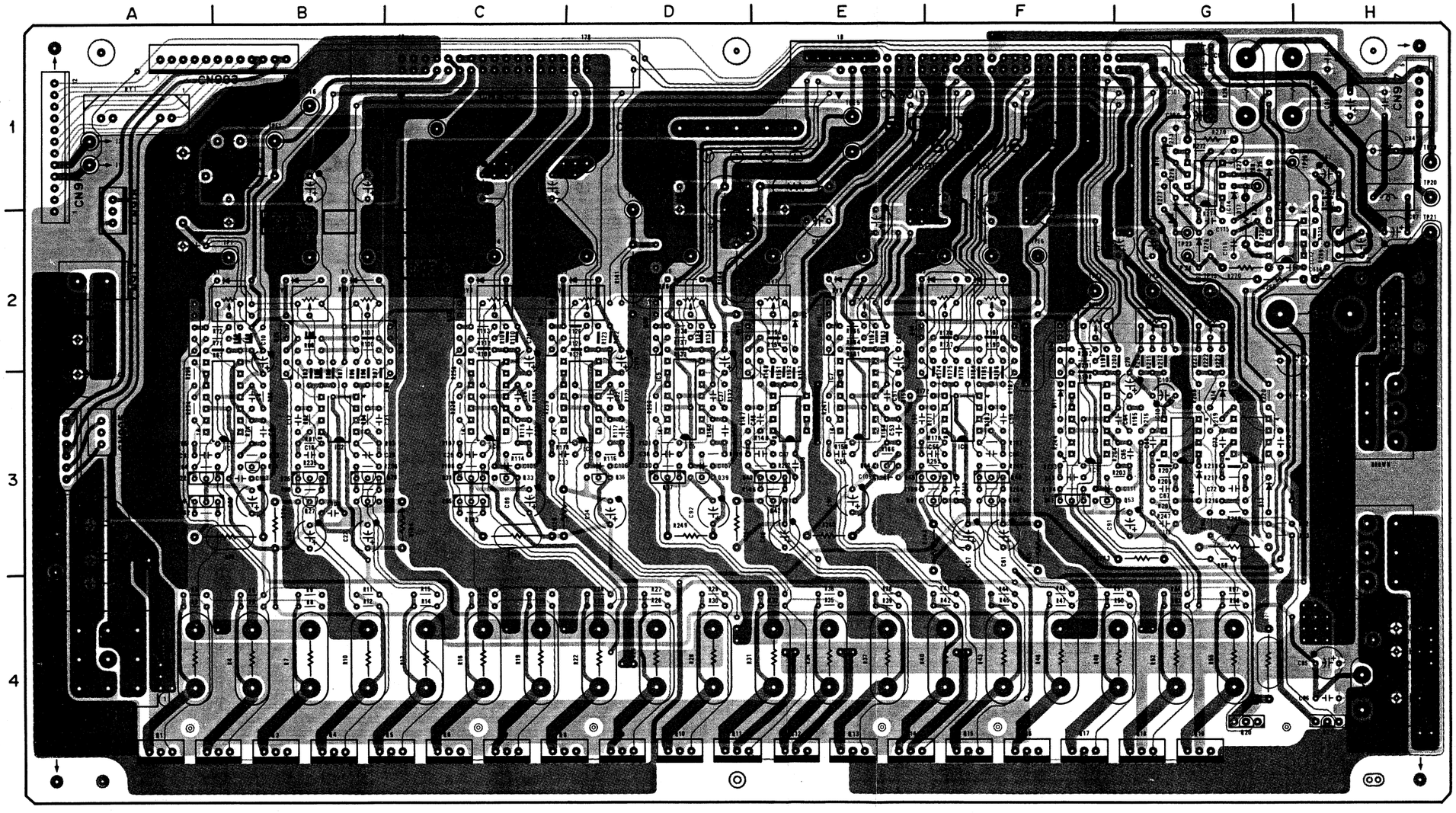

1-606-716-13 COMPONENT SIDE

PS-14 (1-606-716-13 & UP)

BVH-2000/PS/PM		Q20	4G		
BVH-2180/PS/PM		Q21	4H		
BVH-2500/P		Q22	3A		
		Q23	2A		
CN901M		Q24	3B		
	1F	Q25	3B		
CN902M		Q26	2B		
	1C	Q27	3B		
CN903M		Q28	3B		
	1B	Q29	3B		
CN904M		Q30	2C		
	1D	Q31	3C		
CN905M		Q32	2C		
	3A	Q33	3C		
CN911M		Q35	2C		
	3H	Q36	3D		
CN912M		Q37	3D		
	3H	Q38	2D		
CN913M		Q39	3D		
	2A	Q40	3E		
CN914M		Q41	2D		
	4A	Q42	3E		
CN915M		Q43	2E		
	1A	Q44	3E		
CN916M		Q45	3F		
	3A	Q46	2E		
CN917M		Q47	3F		
	1H	Q48	3F		
CN918M		Q49	2F		
	1A	Q50	3F		
		Q51	3F		
D1	2B	Q52	2F		
D2	2B	Q53	3F		
D3	2B	Q54	3A		
D4	2C	Q55	3C		
D5	2D				
D6	2D	RY1	1A		
D7	2E				
D8	2E	RV1	2B		
D9	2F	RV2	2B		
D10	2F	RV3	2B		
D11	3F	RV4	2C		
D12	3G	RV5	2D		
D13	3G	RV6	2D		
D14	3G	RV7	2E		
D15	1G	RV8	2E		
D17	1G	RV9	2F		
D18	1G	RV10	2F		
D20	1G	RV11	2F		
D21	2G	RV12	2G		
		RV13	2G		
IC1	3B				
IC2	3B	TP1	2B		
IC3	3C	TP2	2B		
IC4	3D	TP3	2B		
IC5	3D	TP4	2C		
IC6	3E	TP5	2D		
IC7	3E	TP6	2D		
IC8	3F	TP7	2E		
IC9	3F	TP8	2E		
IC10	3G	TP9	2F		
IC11	3G	TP10	2F		
IC12	2H	TP11	2F		
IC13	2H	TP12	2G		
IC14	1G	TP13	2G		
		TP14	3A		
Q1	4A	TP15	3A		
Q2	4B	TP16	1B		
Q3	4B	TP17	2D		
Q4	4B	TP18	1E		
Q5	4C	TP19	1H		
Q6	4C	TP20	1H		
Q7	4C	TP21	2H		
Q8	4C	TP22	4H		
Q9	4D	TP23	2G		
Q10	4D	TP24	2G		
Q11	4D	TP25	1G		
Q12	4E	TP26	1H		
Q13	4E				
Q14	4E	TPE1	1B		
Q15	4F	TPE2	1C		
Q16	4F	TPE3	1D		
Q17	4F	TPE4	2D		
Q18	4G	TPE5	1E		
Q19	4G	TPE6	2F		

PS-14 BOARD (1/2)

Series Regulator

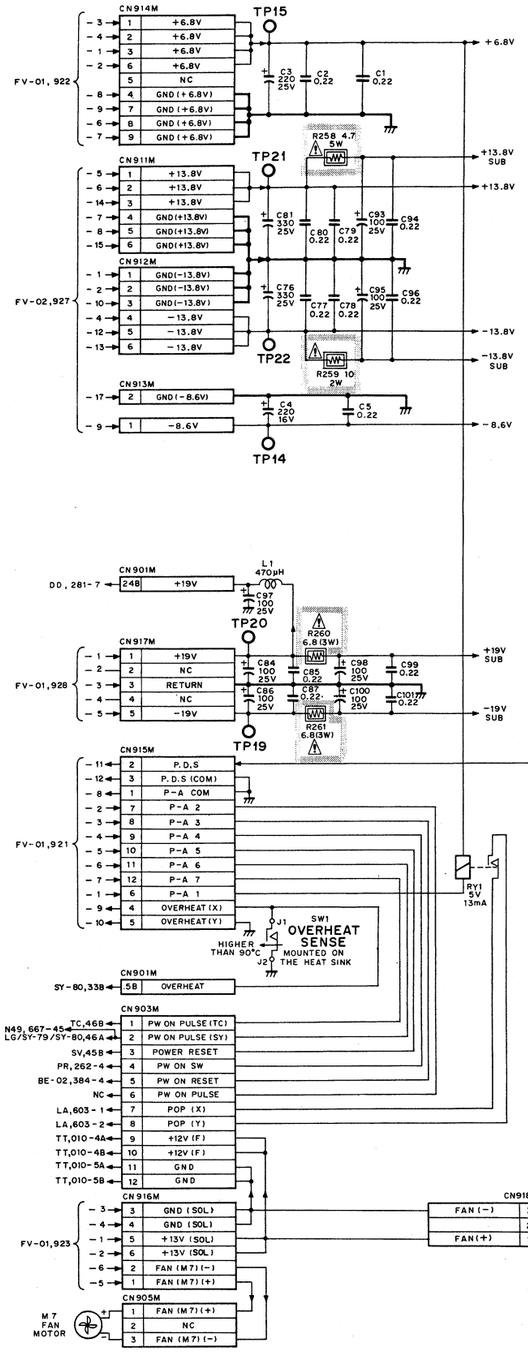

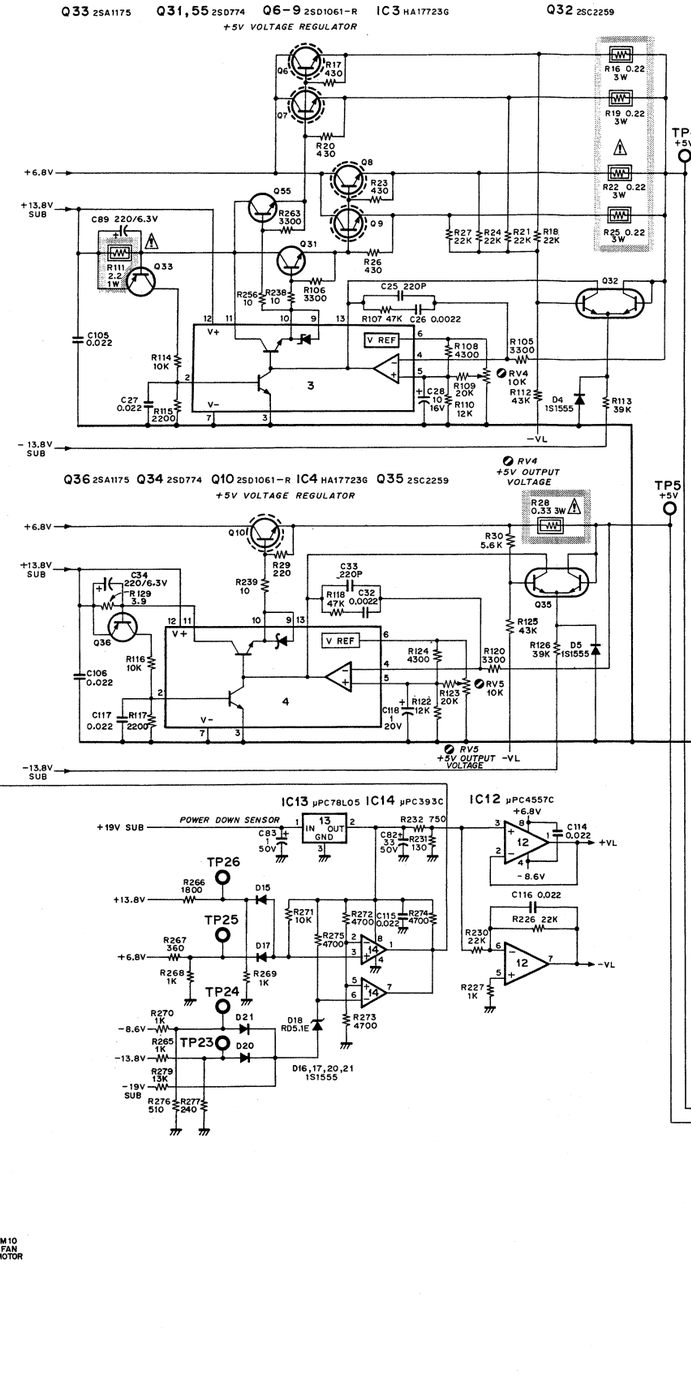

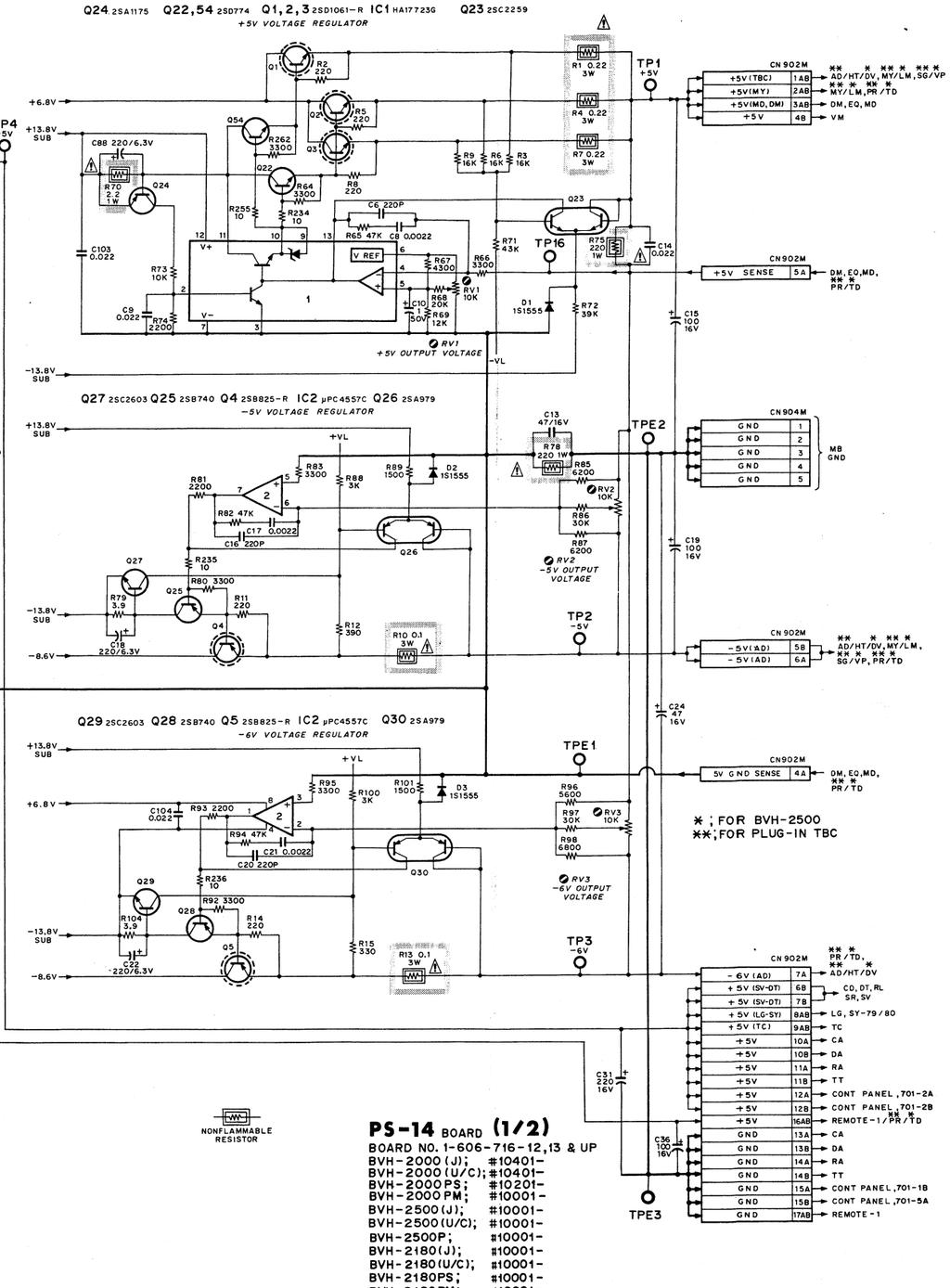

*; FOR BVH-2500
**; FOR PLUG-IN TBC

PS-14 BOARD (1/2)

BOARD NO. 1-606-716-12, 13 & UP

BVH-2000 (J);	#10401-
BVH-2000 (U/C);	#10401-
BVH-2000PS;	#10201-
BVH-2000PM;	#10001-
BVH-2500 (J);	#10001-
BVH-2500 (U/C);	#10001-
BVH-2500P;	#10001-
BVH-2180 (J);	#10001-
BVH-2180 (U/C);	#10001-
BVH-2180PS;	#10001-
BVH-2180PM;	#10001-

PS-14 BOARD (2/2)

Series Regulator

Q53 2SA1175 Q51 2SD774 Q18,19 2SD1061-R IC9 HA17723G Q52 2SC2259
+12 V VOLTAGE REGULATOR

Q20 2SD774 IC10 μPC4557C
+12 V VOLTAGE REGULATOR

Q21 2SB740 IC11 μPC4557C
−12 V VOLTAGE REGULATOR

Q50 2SC2603 Q48 2SB740 Q16,17 2SB825-R IC8 μPC4557C Q49 2SA979
−12 V VOLTAGE REGULATOR

Q39 2SA1175 Q37 2SD774 Q11,12 2SD1061-R IC5 HA17723G Q38 2SC2259
+12 V VOLTAGE REGULATOR

Q42 2SC2603 Q40 2SB740 Q13 2SB825-R IC6 μPC4557C Q41 2SA979
−12 V VOLTAGE REGULATOR

Q44 2SA1175 Q14 2SD1061-R IC7 HA17723G Q43 2SC2259
+12 V VOLTAGE REGULATOR

Q47 2SC2603 Q45 2SB740 Q15 2SB825-R IC8 μPC4557C Q46 2SA979
−12 V VOLTAGE REGULATOR

NONFLAMMABLE RESISTOR

PS-14 BOARD (2/2)
BOARD NO. 1-606-716-12,13 & UP
BVH-2000(J); #10401-
BVH-2000(U/C); #10401-
BVH-2000PS; #10201-
BVH-2000PM; #10001-
BVH-2500(J); #10001-
BVH-2500(U/C); #10001-
BVH-2500P; #10001-
BVH-2180(J); #10001-
BVH-2180(U/C); #10001-
BVH-2180PS; #10001-
BVH-2180PM; #10001-

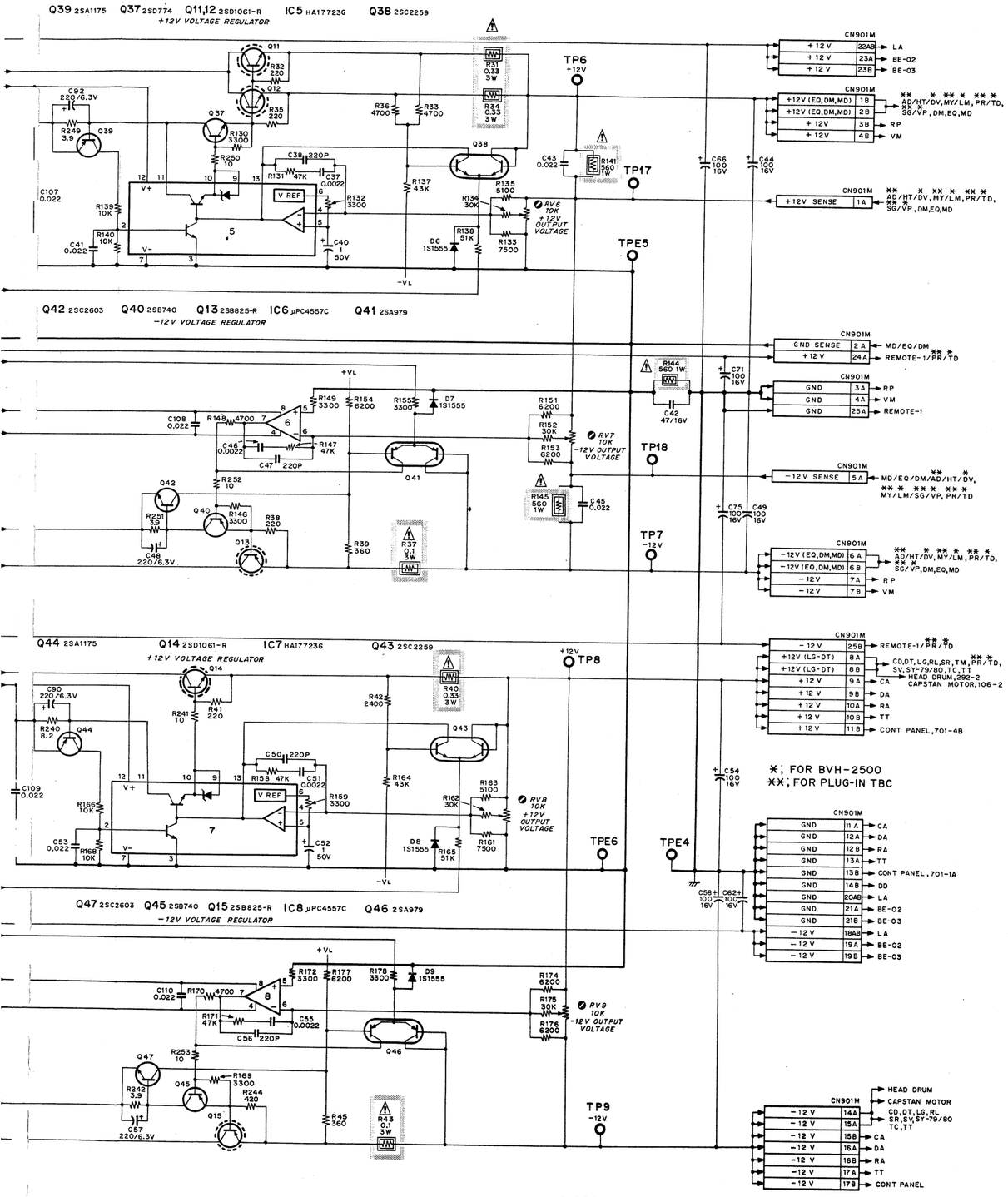
Q39 2SA1175 Q37 2SD774 Q11,12 2SD1061-R IC5 HA17723G Q38 2SC2259
+12V VOLTAGE REGULATOR
Q42 2SC2603 Q40 2SB740 Q13 2SB825-R IC6 μPC4557C Q41 2SA979
−12V VOLTAGE REGULATOR
Q44 2SA1175 Q14 2SD1061-R IC7 HA17723G Q43 2SC2259
+12V VOLTAGE REGULATOR
Q47 2SC2603 Q45 2SB740 Q15 2SB825-R IC8 μPC4557C Q46 2SA979
−12V VOLTAGE REGULATOR
TP6 +12V
TP17
TPE5
TP18
TP7 −12V
TP8 +12V
TPE6
TPE4
TP9 −12V
RV6 10K +12V OUTPUT VOLTAGE
RV7 10K −12V OUTPUT VOLTAGE
RV8 10K +12V OUTPUT VOLTAGE
RV9 10K −12V OUTPUT VOLTAGE
CN901M
+12V 22AB LA
+12V 23A BE-02
+12V 23B BE-03
+12V (EQ,DM,MD) 1B
+12V (EQ,DM,MD) 2B
+12V 3B RP
+12V 4B VM
AD/HT/DV,MY/LM,PR/TD, SG/VP,DM,EQ,MD
+12V SENSE 1A
GND SENSE 2A MD/EQ/DM
+12V 24A REMOTE-1/PR/TD
GND 3A RP
GND 4A VM
GND 25A REMOTE-1
−12V SENSE 5A MD/EQ/DM/AD/HT/DV, MY/LM/SG/VP, PR/TD
−12V (EQ,DM,MD) 6A
−12V (EQ,DM,MD) 6B
−12V 7A RP
−12V 7B VM
−12V 25B REMOTE-1/PR/TD
+12V (LG-DT) 8A
+12V (LG-DT) 8B CD,DT,LG,RL,SR,TM,PR/TD, SV,SY-79/80,TC,TT
+12V 9A CA
+12V 9B DA
+12V 10A RA
+12V 10B TT
+12V 11B CONT PANEL,701-4B
HEAD DRUM,292-2
CAPSTAN MOTOR,106-2
GND 11A CA
GND 12A DA
GND 12B RA
GND 13A TT
GND 13B CONT PANEL,701-1A
GND 14B DD
GND 20AB LA
GND 21A BE-02
GND 21B BE-03
−12V 18AB LA
−12V 19A BE-02
−12V 19B BE-03
−12V 14A HEAD DRUM
−12V 15A CAPSTAN MOTOR
−12V 15B CA
−12V 16A DA
−12V 16B RA
−12V 17A TT
−12V 17B CONT PANEL
CD,DT,LG,RL SR,SV,SY-79/80 TC,TT
*; FOR BVH-2500
**; FOR PLUG-IN TBC

FRAME WIRING (1/2) ; POWER SUPPLY

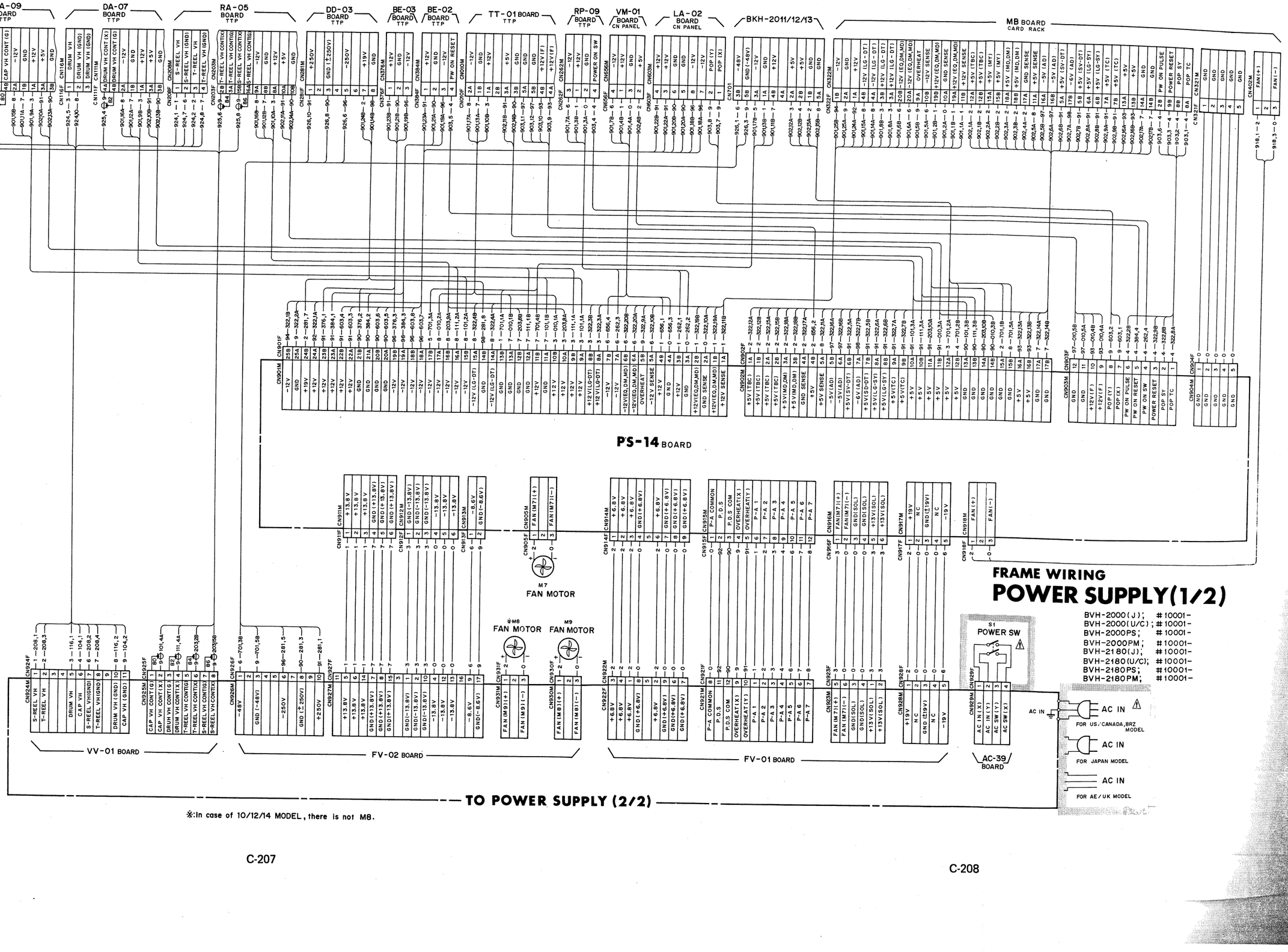

※:In case of 10/12/14 MODEL, there is not M8.

FRAME WIRING
POWER SUPPLY(1/2)

BVH-2000(J); #10001-
BVH-2000(U/C); #10001-
BVH-2000PS; #10001-
BVH-2000PM; #10001-
BVH-2180(J); #10001-
BVH-2180(U/C); #10001-
BVH-2180PS; #10001-
BVH-2180PM; #10001-

CN-54 BOARD (1-607-596-11)

Component Side

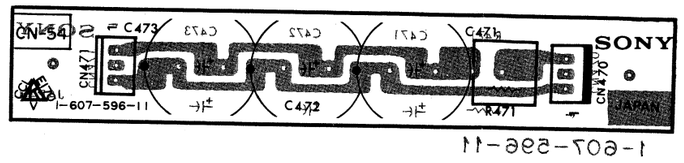

FRAME WIRING (2/2) ; POWER SUPPLY
CN-54 BOARD ; Fan Motor Relaying

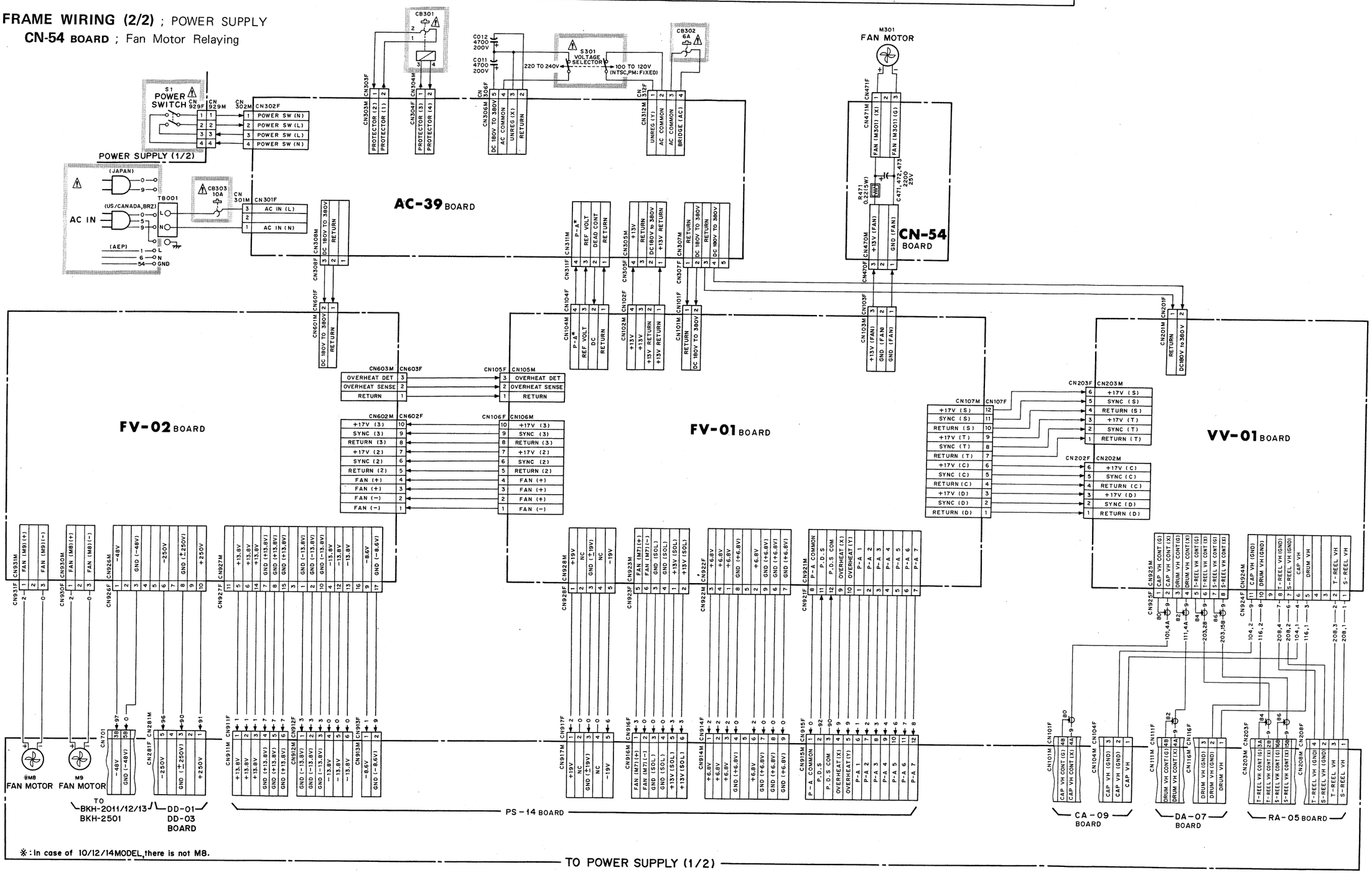

FRAME WIRING
POWER SUPPLY (2/2)

BVH-2000(J); #10001-
BVH-2000(U/C); #10001-
BVH-2000PS; #10001-
BVH-2000PM; #10001-
BVH-2180(J); #10001-
BVH-2180(U/C); #10001-
BVH-2180PS; #10001-
BVH-2180PM; #10001-
BVH-2500(J); #10001-
BVH-2500(U/C); #10001-
BVH-2500P; #10001-

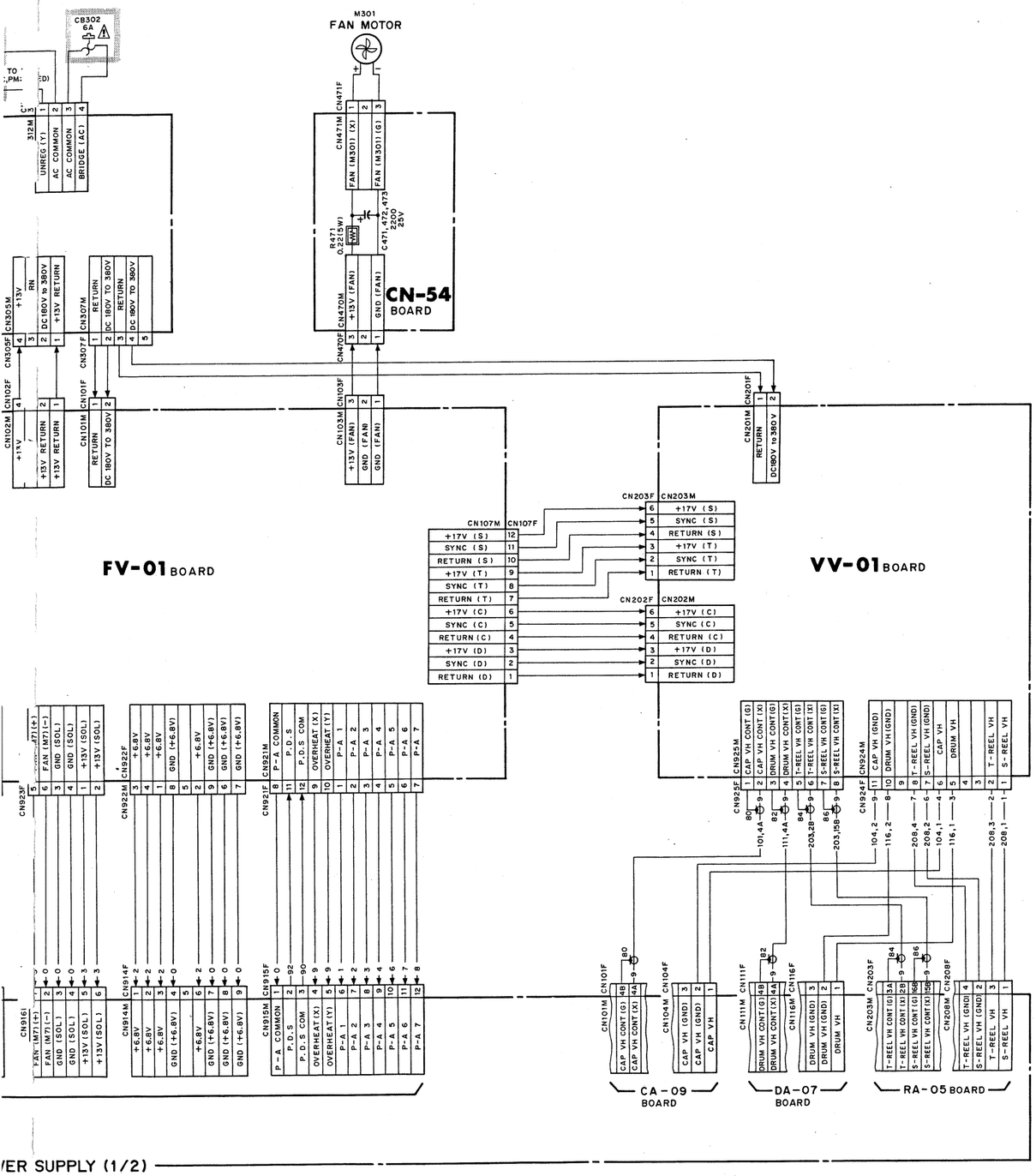

/ER SUPPLY (1/2)

FRAME WIRING
POWER SUPPLY (2/2)

BVH-2000(J); #10001-
BVH-2000(U/C); #10001-
BVH-2000PS; #10001-
BVH-2000PM; #10001-

BVH-2180(J); #10001-
BVH-2180(U/C); #10001-
BVH-2180PS; #10001-
BVH-2180PM; #10001-

BVH-2500(J); #10001-
BVH-2500(U/C); #10001-
BVH-2500P; #10001-

LA-02 BOARD (1-606-672-13)

Component Side

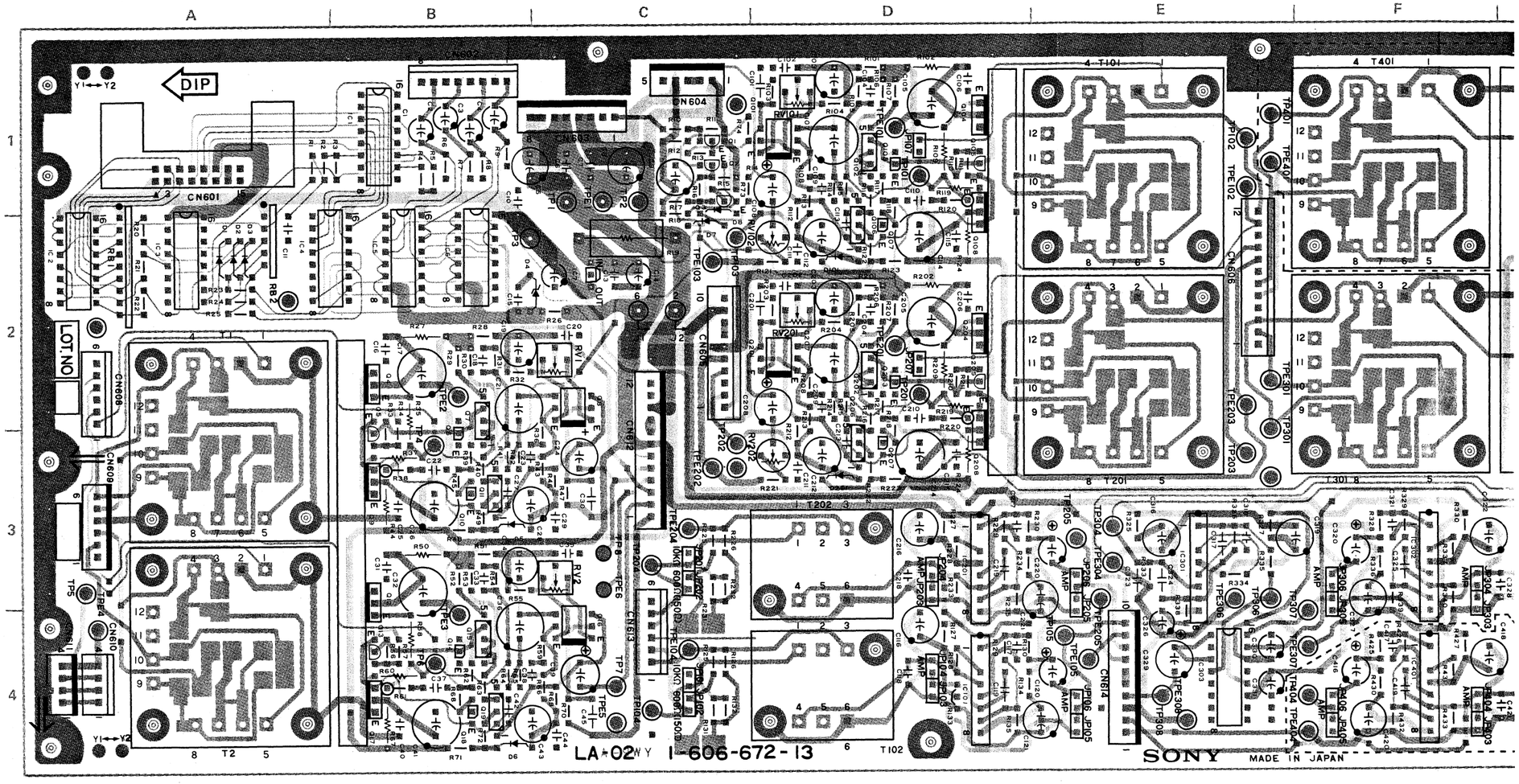

■ 1-606-672-13 COMPONENT SIDE

RB1

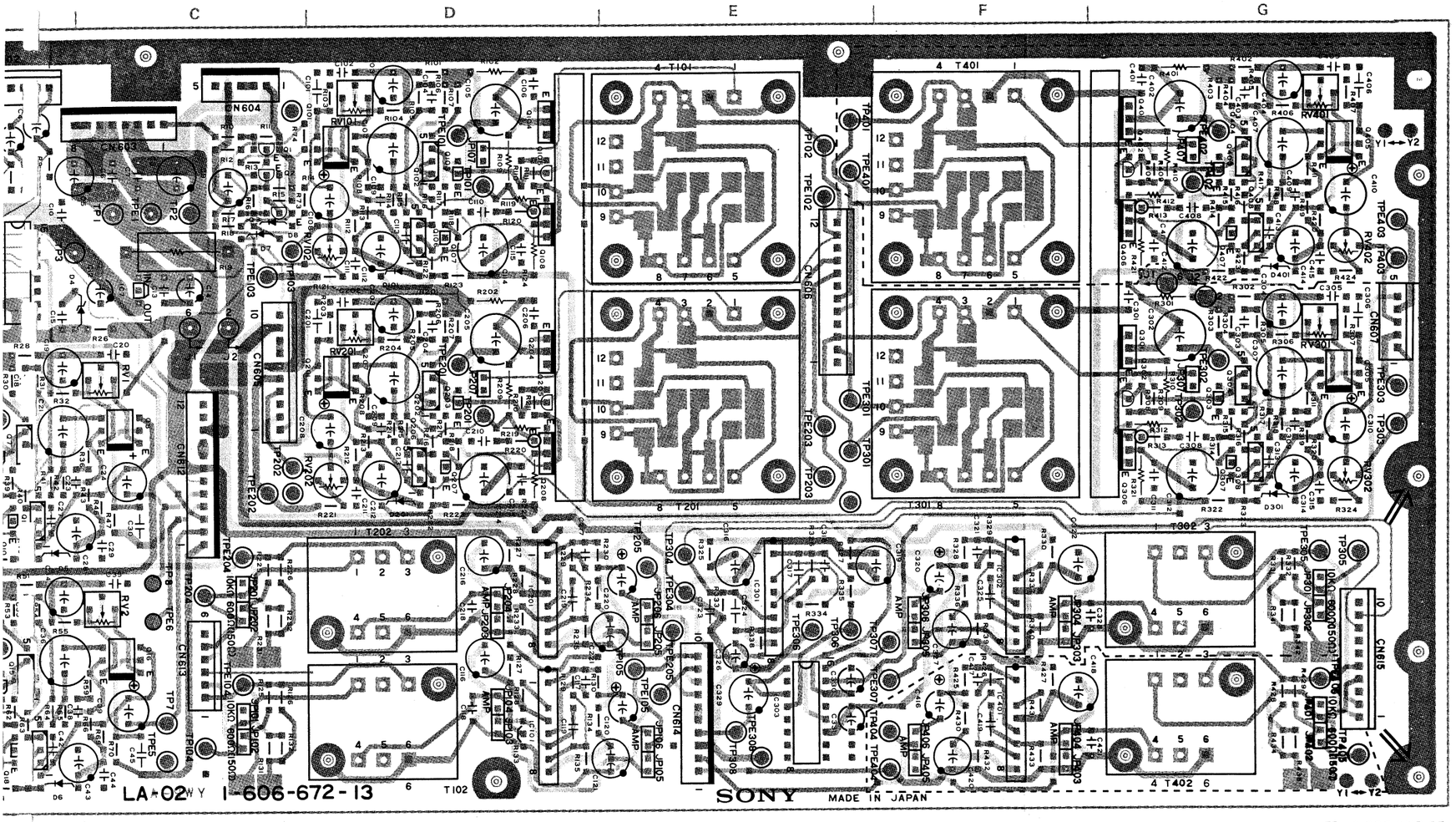

■ 1-606-672-13

LA-02 (1-606-672-12 & UP)

BVH-2000/PM

BVH-2000PS
(00/10/02/12 MODEL)

BVH-2180/PS/PM
BVH-2500/P

CN601M	1A	Q201	2D
CN602M	1B	Q202	2D
CN603M	1C	Q203	2D
CN604M	1C	Q204	2D
CN605M	2C	Q205	2D
CN606M	2E	Q206	3D
CN607M	2G	Q207	3D
CN608M	3A	Q208	3D
CN609M	3A	Q301	2G
CN610M	4A	Q302	2G
CN611M	4A	Q303	2G
CN612M	3C	Q304	2G
CN613M	4C	Q305	2G
CN614M	4E	Q306	3G
CN615M	4G	Q307	3G
		Q308	3G
D1	2A		
D2	2A	RB1	2A
D3	2A	RB2	2A
D4	2B		
D5	3B	RV1	2C
D6	4B	RV2	3C
D7	2C	RV101	1D
D8	2C	RV102	2D
D101	2D	RV201	2D
D201	3D	RV202	3D
D301	3G	RV301	2G
		RV302	3G
IC1	1B		
IC2	2A	TP1	1C
IC3	2A	TP2	1C
IC4	2B	TP3	2B
IC5	2B	TP4	3B
IC6	2B	TP5	4A
IC7	2C	TP6	4B
IC101	4D	TP7	4C
IC201	3D	TP8	3C
IC301	3E	TP101	1D
IC302	3F	TP102	1E
IC303	4E	TP103	2C
		TP104	4C
JP101	4C	TP105	4E
JP102	4C	TP201	3D
JP103	4D	TP202	3C
JP104	4D	TP203	3E
JP105	4E	TP204	3C
JP106	4E	TP205	3E
JP107	1D	TP301	3E
JP201	3C	TP302	3G
JP202	4C	TP303	3G
JP203	4D	TP304	3E
JP204	3D	TP305	3G
JP205	4E	TP306	4E
JP206	3E	TP307	4F
JP207	2D	TP308	4E
JP301	3G		
JP302	3G	TPE1	1C
JP303	4F	TPE2	3B
JP304	3F	TPE3	4B
JP305	4F	TPE4	4A
JP306	3F	TPE5	4C
JP307	2G	TPE6	4C
		TPE101	1D
Q1	1C	TPE102	1E
Q2	1C	TPE103	2C
Q3	1C	TPE104	4C
Q4	2B	TPE105	4E
Q5	3B	TPE201	2D
Q6	3B	TPE202	3C
Q7	3B	TPE203	3E
Q8	3C	TPE204	3C
Q9	3B	TPE205	4E
Q10	3B	TPE301	2E
Q11	3B	TPE302	2G
Q12	4B	TPE303	2G
Q13	4B	TPE304	3E
Q14	4B	TPE305	3G
Q15	4B	TPE306	4E
Q16	4C	TPE307	4F
Q17	4B	TPE308	4E
Q18	4B		
Q19	4B		
Q101	1D		
Q102	1D		
Q103	1D		
Q104	1D		
Q105	1D		
Q106	2D		
Q107	2D		
Q108	2D		

LA-02 (1-606-672-12 & UP)

BVH-2000PS
(04/14 MODEL)

CN601M	1A	Q1	1C
CN602M	1B	Q2	1C
CN603M	1C	Q3	1C
CN604M	1C	Q4	2B
CN605M	2C	Q5	3B
CN606M	2E	Q6	3B
CN607M	2G	Q7	3B
CN608M	3A	Q8	3C
CN609M	3A	Q9	3B
CN610M	4A	Q10	3B
CN611M	4A	Q11	3B
CN612M	3C	Q12	4B
CN613M	4C	Q13	4B
CN614M	4E	Q14	4B
CN615M	4G	Q15	4B
		Q16	4C
D1	2A	Q17	4B
D2	2A	Q18	4B
D3	2A	Q19	4B
D4	2B	Q101	1D
D5	3B	Q102	1D
D6	4B	Q103	1D
D7	2C	Q104	1D
D8	2C	Q105	1D
D101	2D	Q106	2D
D201	3D	Q107	2D
D301	3G	Q108	2D
D401	2G	Q201	2D
		Q202	2D
IC1	1B	Q203	2D
IC2	2A	Q204	2D
IC3	2A	Q205	2D
IC4	2B	Q206	3D
IC5	2B	Q207	3D
IC6	2B	Q208	3D
IC7	2C	Q301	2G
IC101	4D	Q302	2G
IC201	3D	Q303	2G
IC301	3E	Q304	2G
IC302	3F	Q305	2G
IC303	4E	Q306	3G
		Q307	3G
JP101	4C	Q308	3G
JP102	4C	Q401	1G
JP103	4D	Q402	1G
JP104	4D	Q403	1G
JP105	4E	Q404	1G
JP106	4E	Q406	2G
JP107	1D	Q407	2G
JP201	3C	Q408	2G
JP202	4C		
JP203	4D	RV1	2C
JP204	3D	RV2	3C
JP205	4E	RV101	1D
JP206	3E	RV102	2D
JP207	2D	RV201	2D
JP301	3G	RV202	3D
JP302	3G	RV301	2G
JP303	4F	RV302	3G
JP304	3F	RV401	1G
JP305	4F	RV402	2G
JP306	3F		
JP307	2G		
JP401	4G		
JP402	4G		
JP403	4F		
JP404	4F		
JP405	4F		
JP406	4F		
JP407	1G		

TP1	1C	TPE1	1C
TP2	1C	TPE2	3B
TP3	2B	TPE3	4B
TP4	3B	TPE4	4A
TP5	4A	TPE5	4C
TP6	4B	TPE6	4C
TP7	4C	TPE101	1D
TP8	3C	TPE102	1E
TP101	1D	TPE103	2C
TP102	1E	TPE104	4C
TP103	2C	TPE105	4E
TP104	4C	TPE201	2D
TP105	4E	TPE202	3C
TP201	3D	TPE203	3E
TP202	3C	TPE204	3C
TP203	3E	TPE205	4E
TP204	3C	TPE301	2E
TP205	3E	TPE302	2G
TP301	3E	TPE303	2G
TP302	3G	TPE304	3E
TP303	3G	TPE305	3G
TP304	3E	TPE306	4E
TP305	3G	TPE307	4E
TP306	4E	TPE308	4E
TP307	4F		
TP308	4E		

LA-02 BOARD

Audio Line IN/OUT Amplifier

INPUT IMPEDANCE CHANGES

INPUT IMP	JUMPER POSITIONS (ALL CHANNELS)
10K	JP101,201,301,401 (K) = OPEN
600	JP102,202,302,402 (K) = OPEN
150	JP102,202,302,402 (K) = SHORT

OUTPUT IMPEDANCE CHANGES

OUTPUT IMP	S/O/C POSITIONS (A)(B)(C)(D)(E)(F)(G)(H)(I)
600	S S S O O O O O O
150	C S S S S O O O O
37.5	C C C S S S S S S

S: SHORT
O: OPEN
C: CUT

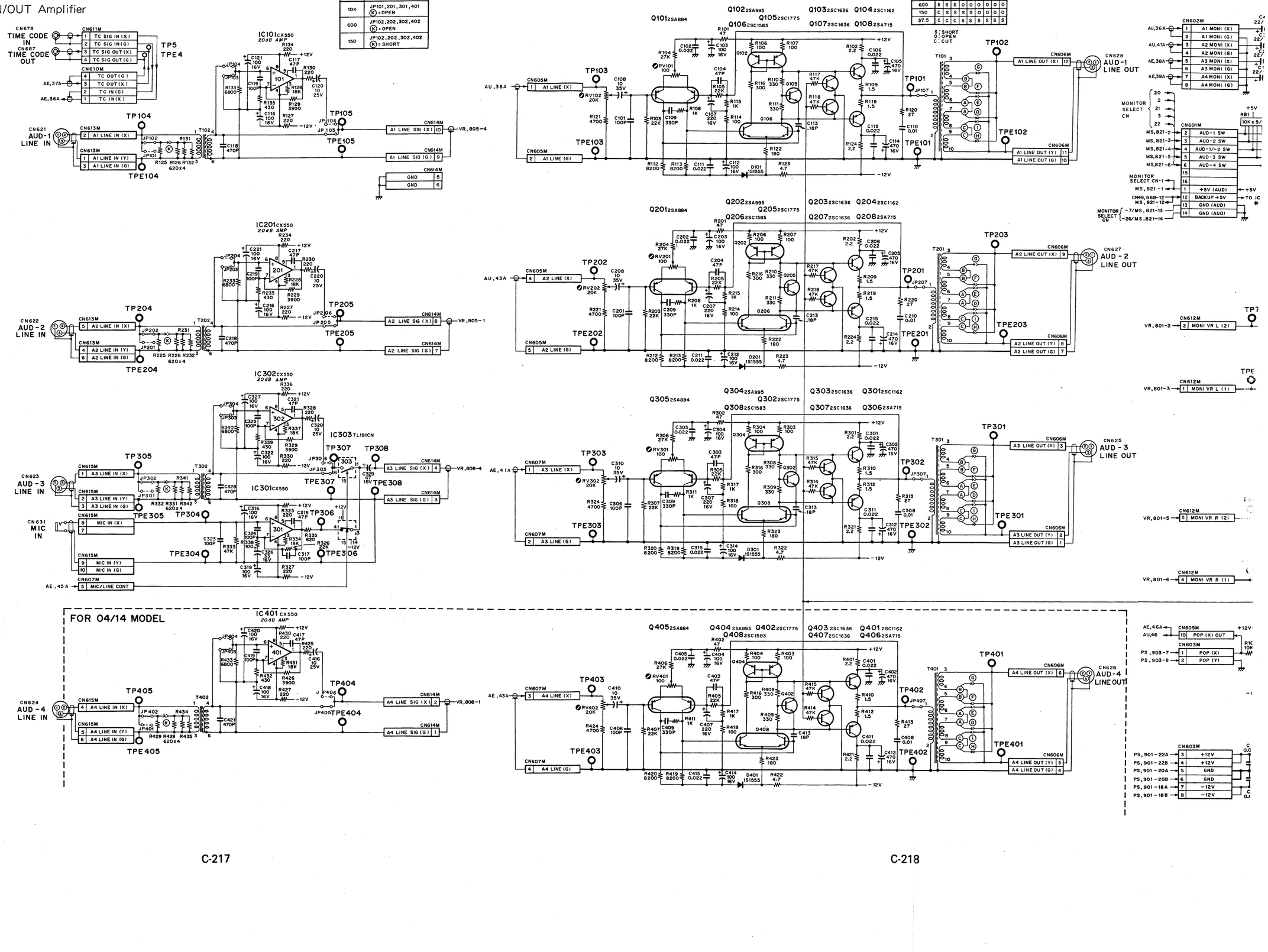

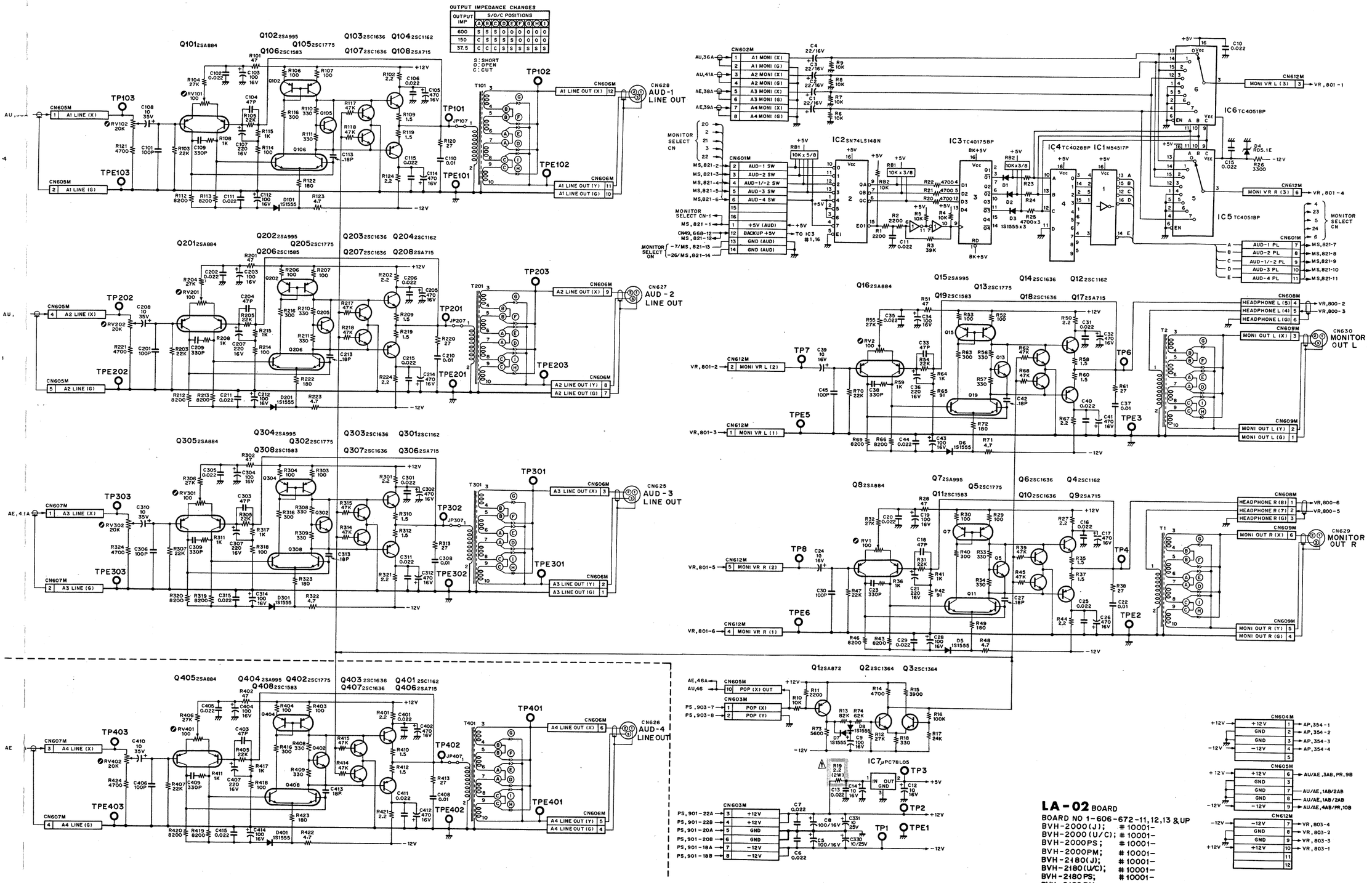
OUTPUT IMPEDANCE CHANGES
OUTPUT IMP
S/O/C POSITIONS
A B C D E F G H I
600 S S S O O O O O O
150 C S S S S O O O O
37.5 C C C S S S S S S
S: SHORT
O: OPEN
C: CUT
AUD-1 LINE OUT
AUD-2 LINE OUT
AUD-3 LINE OUT
AUD-4 LINE OUT
MONITOR OUT L
MONITOR OUT R
MONITOR SELECT CN
IC1 M54517P
IC2 SN74LS148N
IC3 TC40175BP
IC4 TC4028BP
IC5 TC4051BP
IC6 TC4051BP
IC7 μPC78L05
LA-02 BOARD
BOARD NO 1-606-672-11,12,13 & UP
BVH-2000(J); # 10001-
BVH-2000(U/C); # 10001-
BVH-2000PS; # 10001-
BVH-2000PM; # 10001-
BVH-2180(J); # 10001-
BVH-2180(U/C); # 10001-
BVH-2180PS; # 10001-
BVH-2180PM; # 10001-
BVH-2500(J); # 10001-
BVH-2500(U/C); # 10001-
BVH-2500P; # 10001-

VM-01 BOARD (1-606-658-14)
Component Side

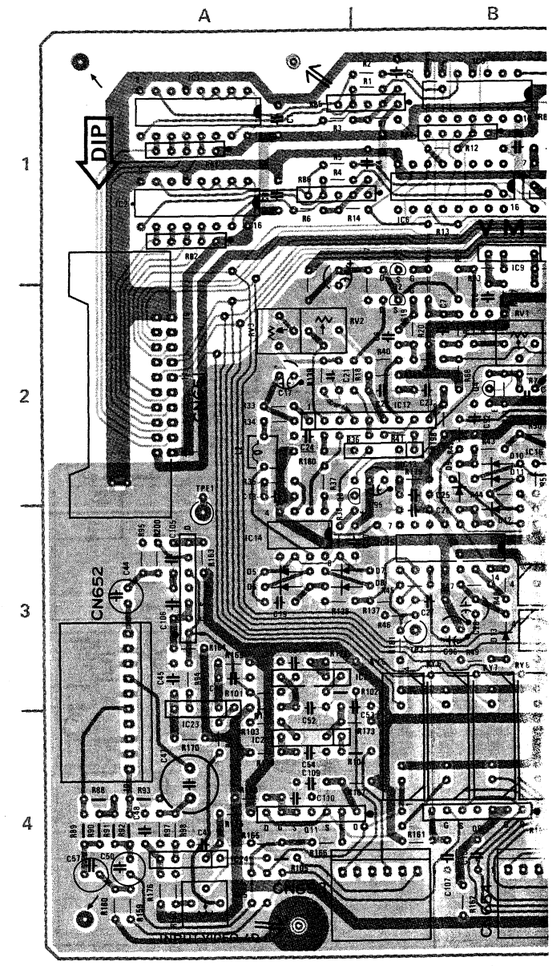

■ 1-606-658-14 COMPONENT SIDE

RB1, 2, 3, 4, 5, 6

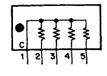

VM-01 BOARD (1-606-658-14)

Component Side

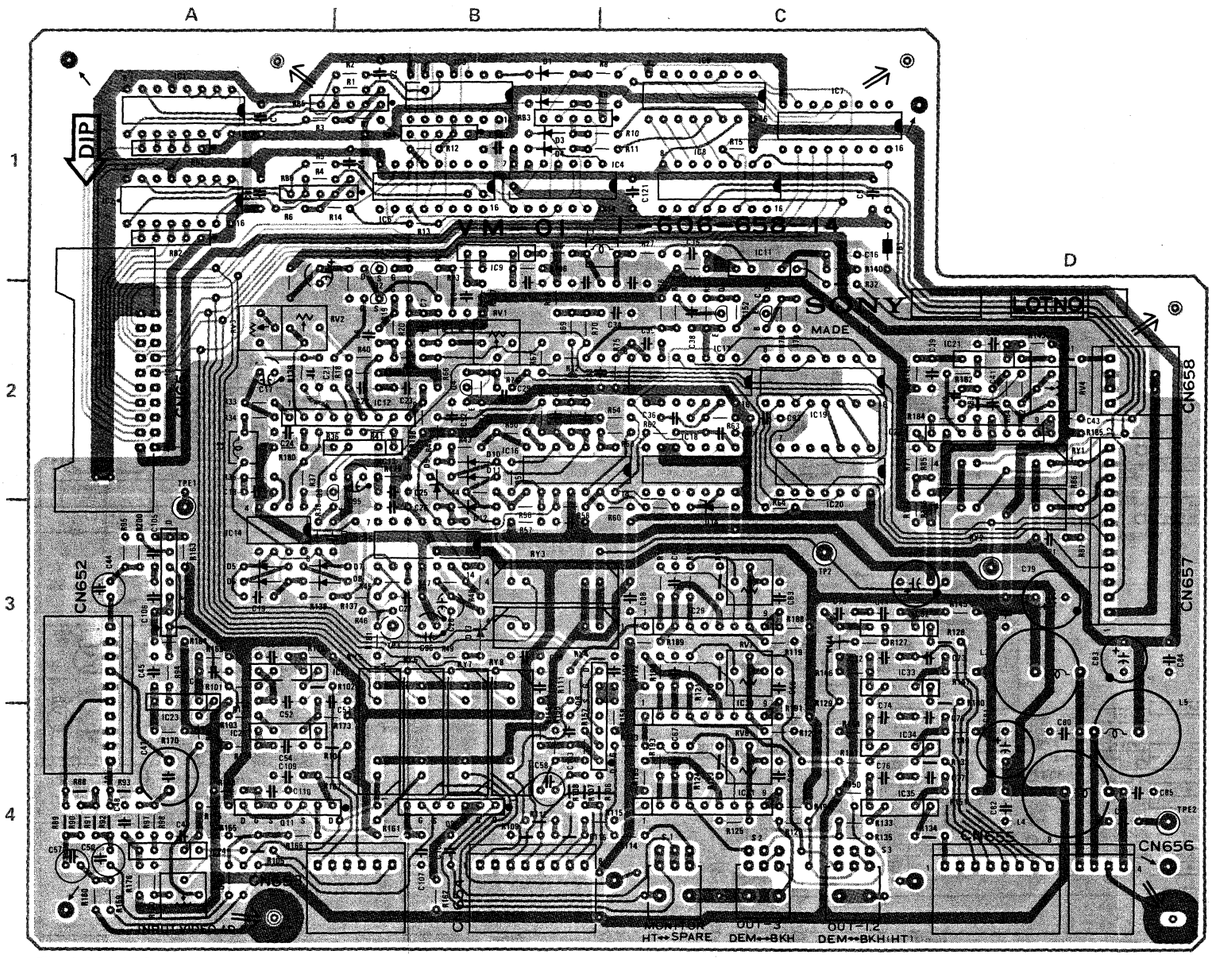

■ 1-606-658-14 COMPONENT SIDE

■ 1-606-658-14 SOLDER SIDE

RB1, 2, 3, 4, 5, 6

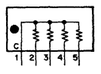

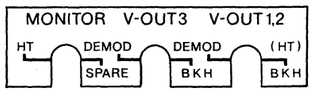

VM-01 (1-606-658-14 & UP)

BVH-2000/PS/PM
BVH-2180/PS/PM
BVH-2500/P

CN651M		Q1	2B
	2A	Q2	2B
CN652M		Q3	2B
	3A	Q4	2B
CN653M		Q5	2C
	4A	Q6	2C
CN654M		Q8	4B
	4B	Q9	4B
CN655M		Q10	3A
	4D	Q11	4A
CN656M			
	4D	RB1	1A
CN657M		RB2	1A
	3D	RB3	1B
CN658M		RB4	1B
	2D	RB5	1B
		RB6	1A
D1	1B		
D2	1B	RV1	2B
D3	1B	RV2	2A
D4	1B	RV3	2A
D5	3A	RV4	2D
D6	3A	RV5	4A
D7	3A	RV6	3C
D8	3A	RV7	3C
D9	2B	RV8	4C
D10	2B		
D11	2B	RY1	2D
D12	3B	RY2	3D
D13	3B	RY3	3B
D14	3C	RY4	3B
		RY5	4B
IC1	1A	RY6	4B
IC2	1A	RY7	4B
IC3	1B	RY8	4B
IC4	1B		
IC5	1C	S1	4C
IC6	1B	S2	4C
IC7	1C	S3	4C
IC8	1C		
IC9	2B	TP1	3D
IC11	2C	TP2	3C
IC12	2B	TP3	3B
IC13	2B		
IC14	3A	TPE1	3A
IC15	3B	TPE2	4D
IC16	2B		
IC17	2C		
IC18	2C		
IC19	2C		
IC20	2C		
IC21	2D		
IC22	2D		
IC23	4A		
IC24	4A		
IC25	3A		
IC26	4A		
IC29	3C		
IC30	4C		
IC31	4C		
IC32	3C		
IC33	3C		
IC34	4C		
IC35	4C		

VM-01 BOARD

Video Buffer/Monitor Select

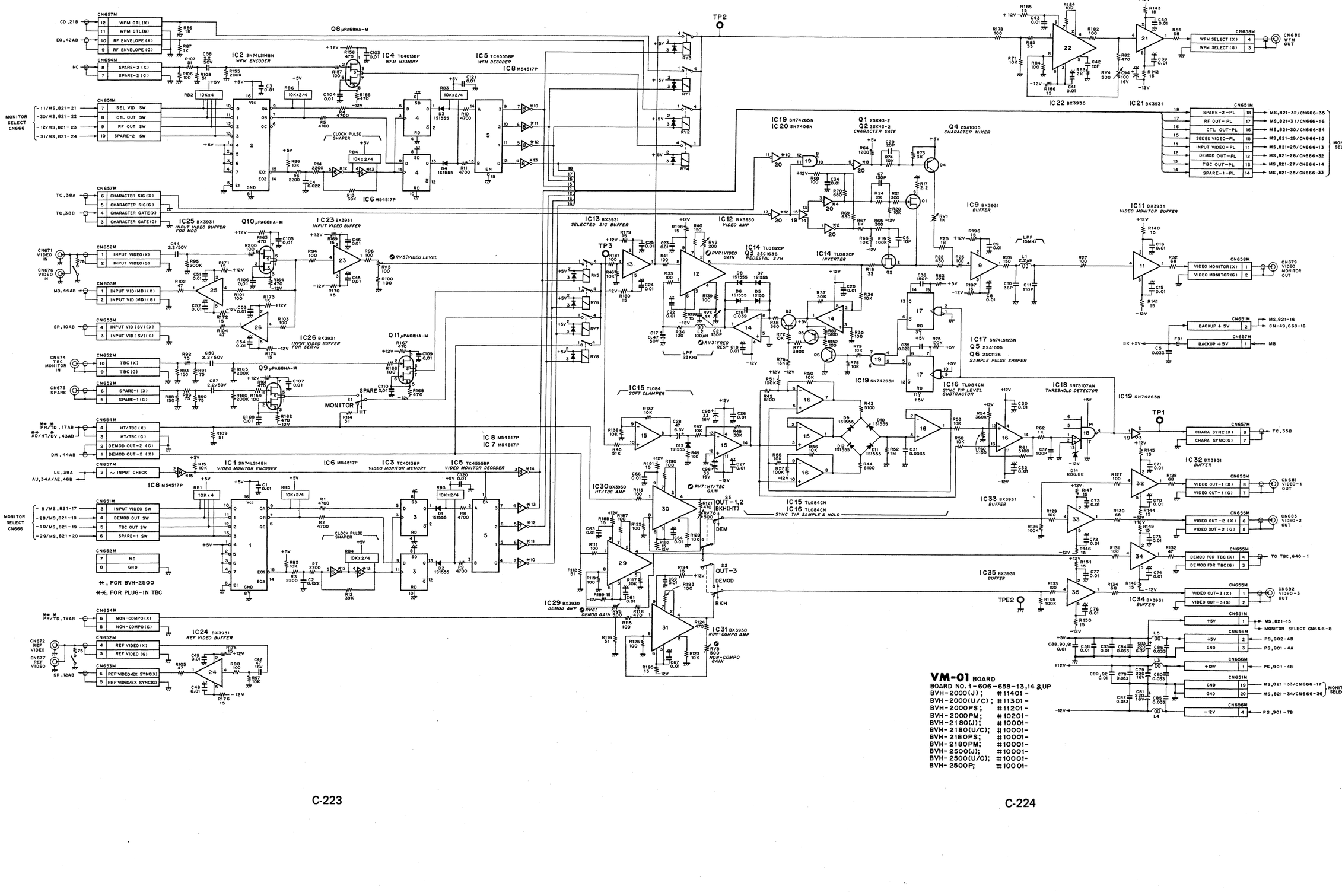

VM-01 BOARD
BOARD NO. 1-606-658-13,14 &UP
BVH-2000(J); #11401-
BVH-2000(U/C); #11301-
BVH-2000PS; #11201-
BVH-2000PM; #10201-
BVH-2180(J); #10001-
BVH-2180(U/C); #10001-
BVH-2180PS; #10001-
BVH-2180PM; #10001-
BVH-2500(J); #10001-
BVH-2500(U/C); #10001-
BVH-2500P; #10001-

CN-37 CONNECTOR PANEL

CN-37 BOARD (1-606-713-11)
Component Side

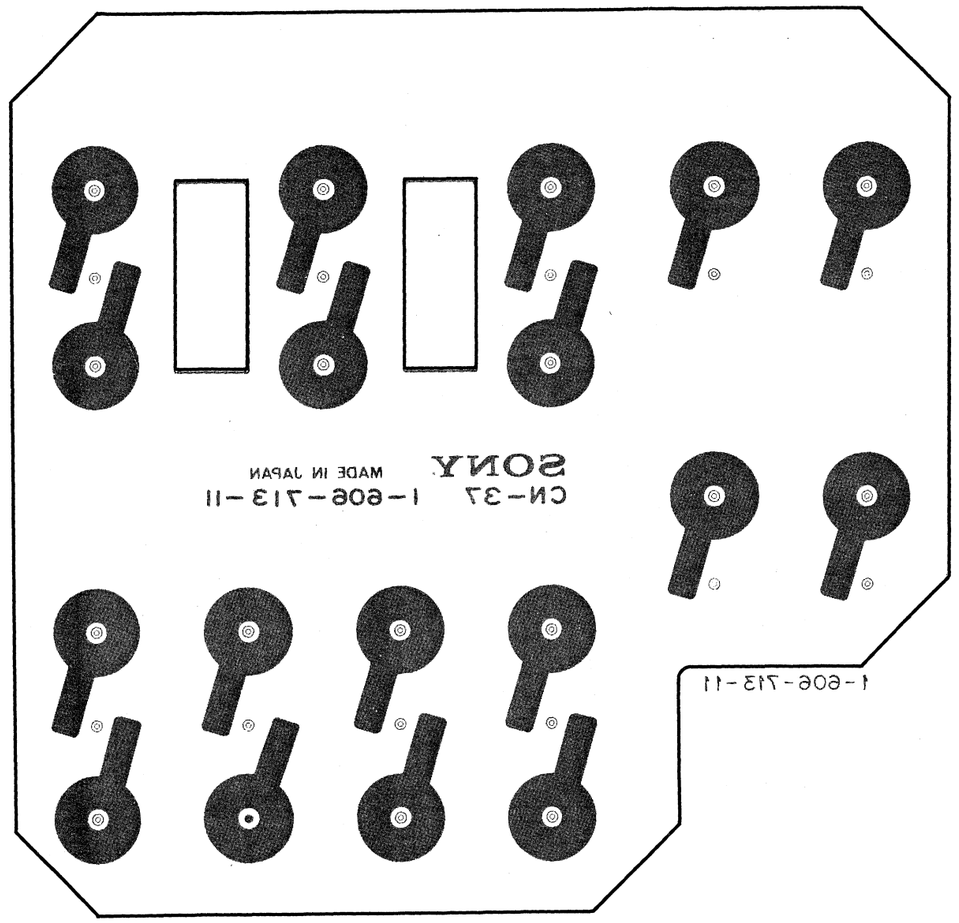

BVH-2500/P C-255 C-256

FRAME WIRING – AUDIO/VIDEO ; CONNECTOR PANEL

CN-37 BOARD ; Video Connector Panel

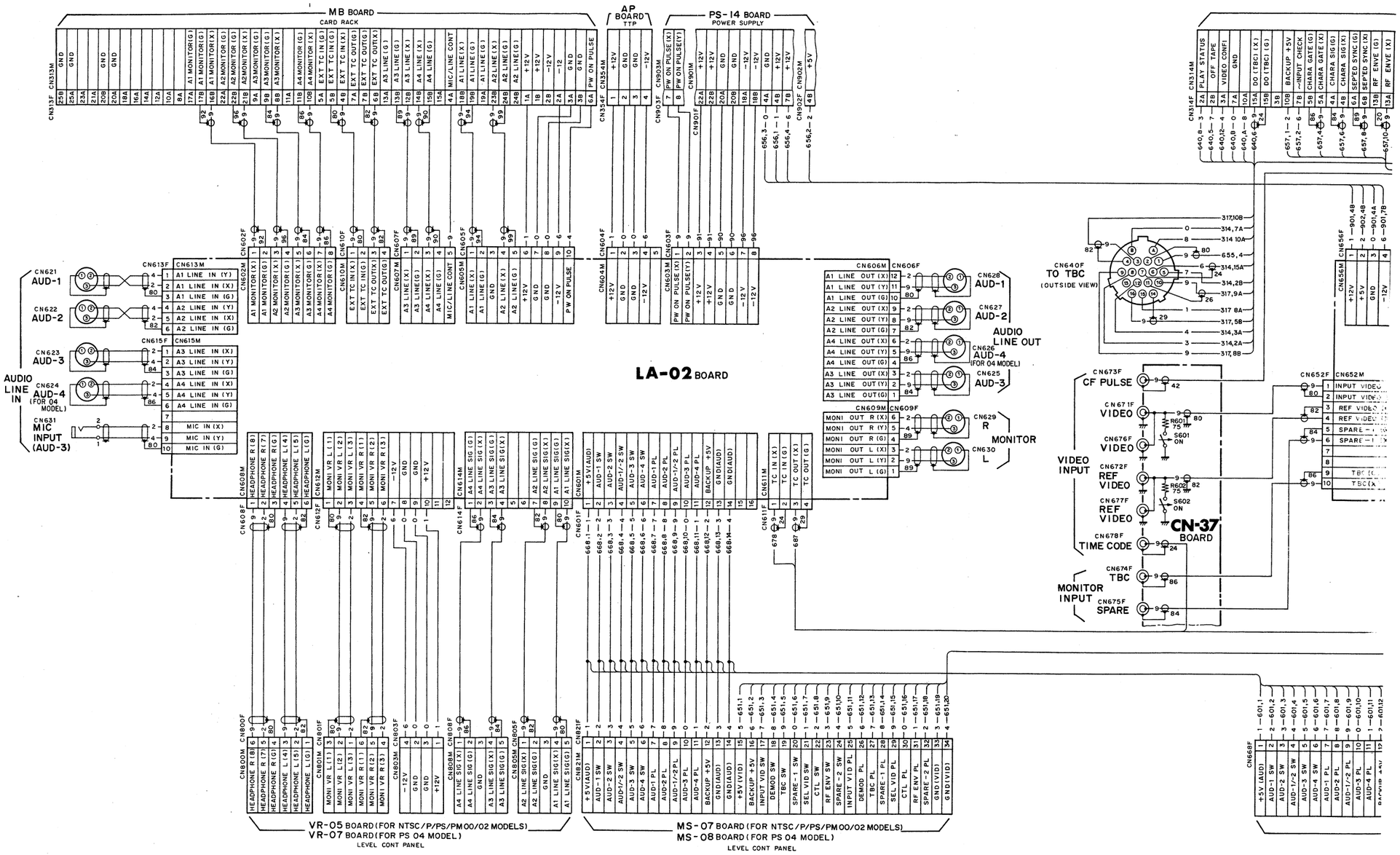

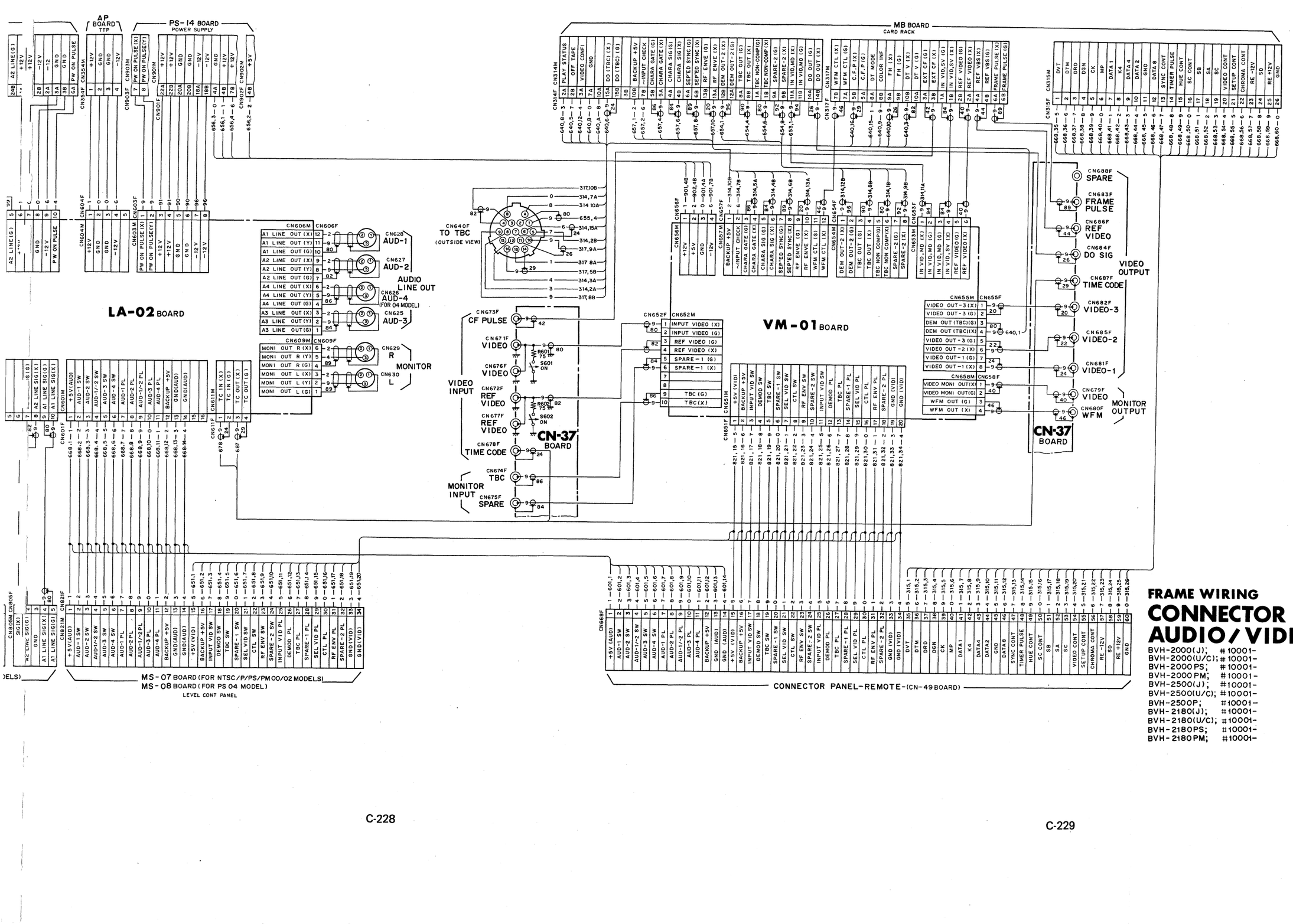

FRAME WIRING
CONNECTOR PANEL AUDIO/VIDEO

BVH-2000(J); #10001-
BVH-2000(U/C); #10001-
BVH-2000PS; #10001-
BVH-2000PM; #10001-
BVH-2500(J); #10001-
BVH-2500(U/C); #10001-
BVH-2500P; #10001-
BVH-2180(J); #10001-
BVH-2180(U/C); #10001-
BVH-2180PS; #10001-
BVH-2180PM; #10001-

FRAME WIRING-AUDIO/VIDEO CN-37 CONNECTOR PANEL **(FOR 10/12/14)**

FRAME WIRING – AUDIO/VIDEO ; CONNECTOR PANEL (FOR 10/12/14 MODEL)

CN-37 BOARD ; Video Connector Panel

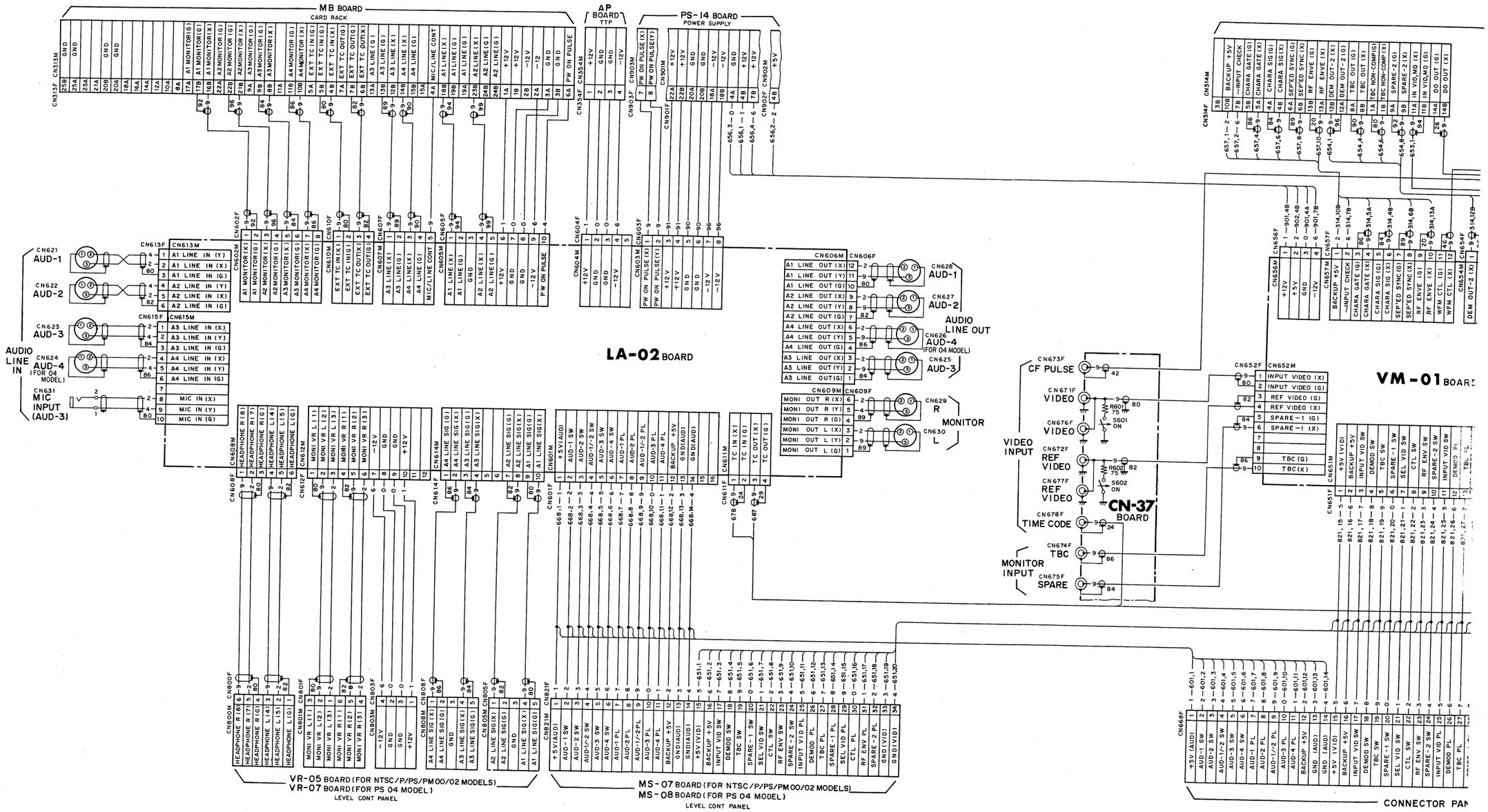

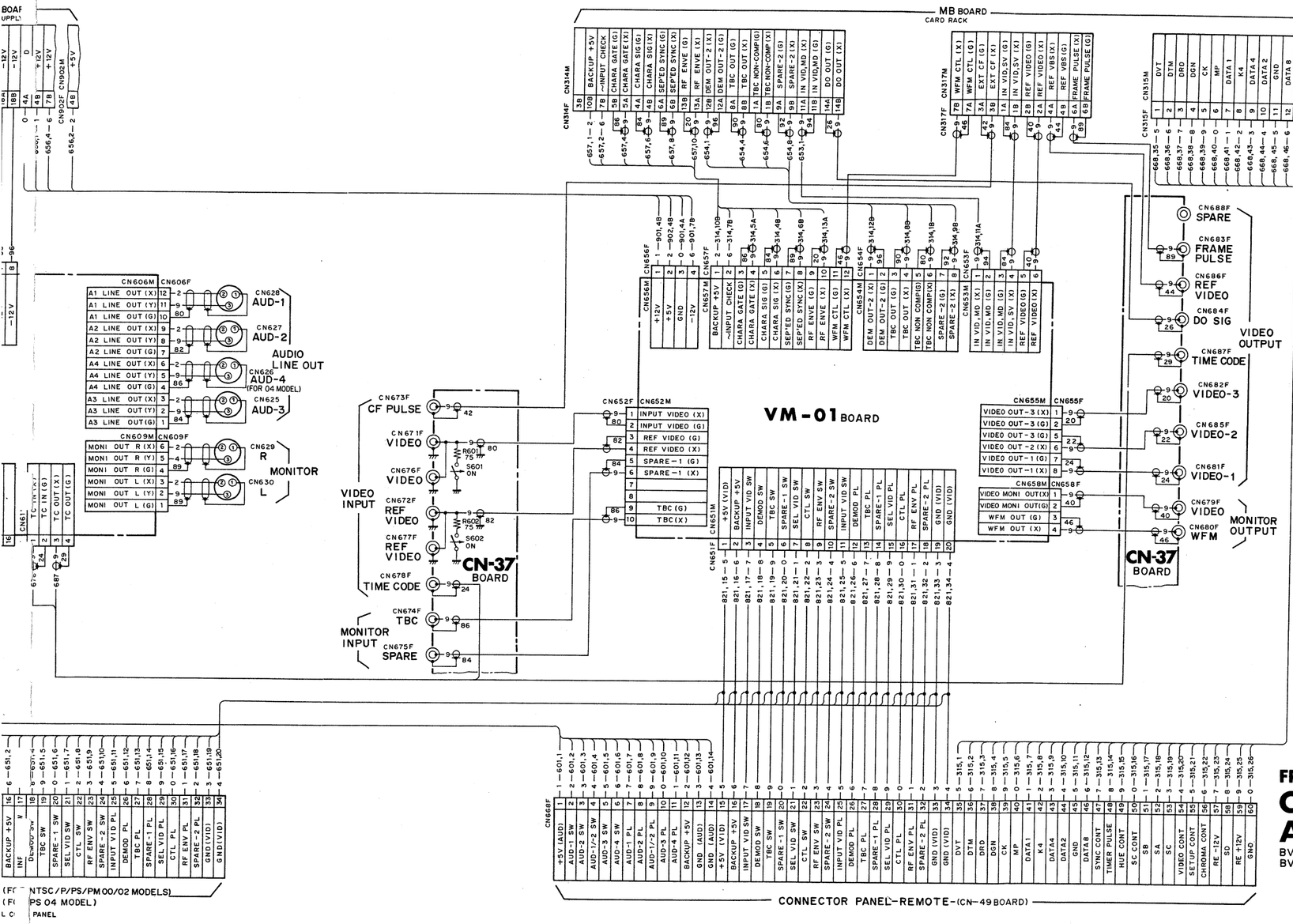

FRAME WIRING(FOR 10/12/14)
CONNECTOR PANEL AUDIO/VIDEO

BVH-2000(U/C); #34501-
BVH-2000PS; #34301-

CN-49 BOARD (1-606-714-12)
Component Side

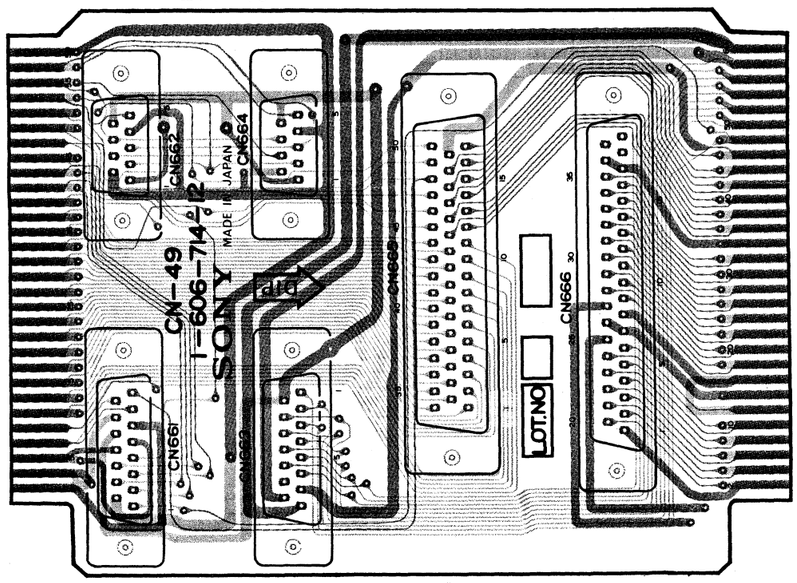

(230)

CONNECTOR PANEL **CN-49**

FRAME WIRING – REMOTE ; CONNECTOR PANEL

CN-49 BOARD; Remote Connector Panel

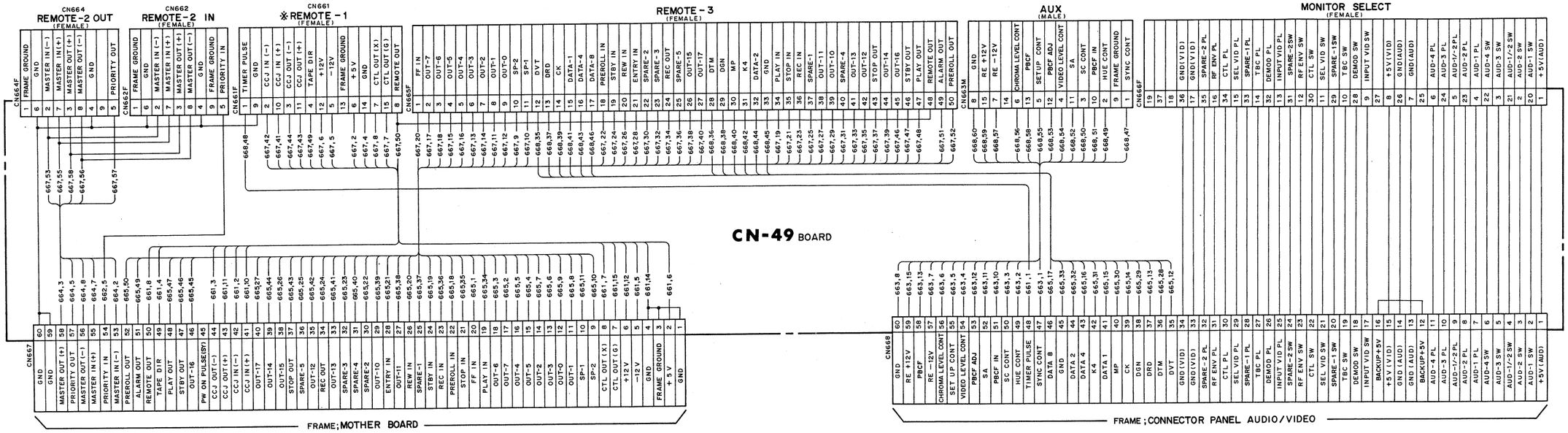

※:In case of 10/12/14 MODEL, there is not REMOTE-1.

FRAME WIRING
CONNECTOR PANEL-REMOTE

BVH-2000(J);	#10001-
BVH-2000(U/C);	#10001-
BVH-2000PS;	#10001-
BVH-2000PM;	#10001-
BVH-2500(J);	#10001-
BVH-2500(U/C);	#10001-
BVH-2500P;	#10001-
BVH-2180(J);	#10001-
BVH-2180(U/C);	#10001-
BVH-2180PS;	#10001-
BVH-2180PM;	#10001-

SECTION D
REPLACEABLE PARTS AND OPTIONAL FIXTURE

補修用部品注意事項

(1) 安全重要部品

分解図，電気部品表中，⚠印及び▒で囲まれた部品は安全性を維持するために重要な部品である。従ってこれらの部品を交換するときには必ず指定の部品と交換すること。

(2) 部品の共通化

ソニーから供給される部品はセットに実装されているものと異なることがある。これは部品の共通化，改良等によるものである。
分解図や電気部品表には現時点での共通化された部品が記載されている。

(3) 部品の変更に関する情報はSECTION E CHANGED PARTSの項を参照のこと。

(4) 部品の在庫

部品表中，( )で示されている部品は交換頻度が低い部品であるので在庫していないことがあり，納期が長くなることがある。

(5) コンデンサー，インダクター，抵抗の単位

回路図，分解図，電気部品表中，特に明記したものを除き，下記の単位は省略されている。

コンデンサー；μF
インダクター；μH
抵抗；Ω

Notes on Repair Parts

(1) Safety Related Components Warning

Components identified by shading marked with ⚠ on the exploded views and electrical spare parts list are critical to safe operation. Replace these components with Sony parts whose part numbers appear in this manual or in service bulletins and service manual supplements published by Sony.

(2) Standardization of Parts

Repair parts supplied from Sony Parts Center may not be always identical with the part which actually in use due to "accommodating the improved parts and/or engineering changes" or "standardization of genuine parts".
This manual's exploded views and electrical spare parts list are indicating the parts numbers of "the standardized genuine parts at present".

(3) Regarding engineering parts changes in our engineering department, refer to SECTION E CHANGED PARTS.

(4) Stock of Parts

Parts marked with ( ) on the spare parts list are not normally required for routine service work. Orders for parts marked with will be processed, but allow for additional delivery time.

(5) Units for Capacitors, Inductors and Resistors

The following units are assumed in schematic diagrams, electrical parts list and exploded views unless otherwise specified:

Capacitors: μF
Inductors: μH
Resistors: ohm

FRONT PANEL ASSEMBLIES (BVH-2000/2500/2700)

No.		Part No.	Description
A01	()	A-6004-108-A	PANEL ASSY,DRUM
A02	()	A-6004-127-C	PANEL ASSY,REEL
A03	()	A-6004-110-C	PANEL(1) ASSY,PCB INDICATION
A04	()	A-6004-112-B	COVER ASSY,HEAD
			(for BVH-2000)
	()	A-6004-151-A	COVER ASSY(NS),HEAD
			(for BVH-2000 10,12)
A05	()	A-6004-113-B	COVER ASSY
			(for BVH-2000/PS/PM)
			(for BVH-2500/P)
A06	()	A-6004-114-C	DAMPER ASSY
A07	()	A-6004-118-A	COVER ASSY,HEAD
			(for BVH-2000PS)
	()	A-6004-150-A	COVER(PS) ASSY,HEAD
			(for BVH-2000PS 10,12,14)
A08	()	A-6004-120-A	COVER ASSY,HEAD
			(for BVH-2000PM)
A09	()	A-6004-128-A	COVER ASSY,HEAD
			(for BVH-2500)
	()	A-6004-138-A	COVER ASSY,HEAD
			(for BVH-2500P)
A10	()	A-6004-148-A	COVER ASSY,HEAD
			(for BVH-2700)
A11	()	A-6004-149-A	COVER ASSY
			(for BVH-2700)
X01	()	X-3673-646-3	LID ASSY,UPPER
201		2-523-667-00	CUSHION
302	()	3-566-707-00	EMBLEM,SONY
303		3-575-368-00	SPRING,COMPRESSION
304		3-657-977-00	EMBLEM,OMEGA
305	()	3-673-869-00	COVER(T),GUIDE
306	()	3-673-870-00	COVER(S),GUIDE
307	()	3-673-881-00	SASH(RIGHT),ORNAMENTAL
308	()	3-673-882-00	SASH(LEFT),ORNAMENTAL
309	()	3-673-883-00	KNOB LOCK
310	()	3-673-917-00	PLATE(R),ORNAMENTAL
311	()	3-673-918-00	PLATE(L),ORNAMENTAL
312	()	3-673-944-00	NUT,M3,ORNAMENTAL
313	()	3-673-946-00	GLASS,WINDOW
			(for BVH-2000/PS/PM)
			(for BVH-2500/P)
314		3-673-965-00	SHAFT,FITTING,DAMPER
315	()	3-673-968-00	STOPPER,SCREW
316	()	3-673-971-02	COVER,CAPSTAN
317	()	3-673-985-00	COVER,FRONT SHIELD
318	()	3-815-122-00	BUSHING,RUBBER
319		3-840-411-00	PUSH NUT 2.4
320		3-701-441-21	WASHER,M4,POLY
321	()	3-673-784-00	CAP
322	()	3-680-318-00	COVER,STOPPER
323		3-680-378-01	LABEL(4),PC BOARD
			(for BVH-2000)
324		3-680-379-01	LABEL(5),PC BOARD
			(for BVH-2000PS)
325		3-674-694-00	LABEL(3),PC BOARD
			(for BVH-2000PM)
326		3-680-356-01	LABEL,PC BOARD(1)
			(for BVH-2500)
327		3-680-376-01	LABEL(2),PC BOARD
			(for BVH-2500P)
328		3-693-018-01	LABEL(HS),PC BOARD
			(for BVH-2700)
329	()	3-673-946-11	GLASS,WINDOW
			(for BVH-2700)
401	()	4-324-412-00	SPACER
402		4-864-521-00	SPRING COMPRESSION
701		7-621-912-30	SCREW,B2.6x6
702		7-623-923-01	WASHER,M2.6,POLY
703		7-623-954-51	WASHER,M3,FIBER
704		7-624-200-11	PUSH NUT 1.5
705		7-626-301-31	SPRING PIN 2x10
706		7-682-350-04	SCREW,RK3x12
707		7-684-023-04	NUT,M3
708		7-686-531-01	SCREW,PSW3x14
709		7-686-623-04	SCREW,B3x5
710		7-686-624-09	SCREW,B3x6
711		7-686-626-04	SCREW,B3x10
712		7-686-639-04	SCREW,B4x16,WHITE
713		7-686-639-09	SCREW,B4x16,BLACK
714		7-685-133-14	SCREW,BTP2.6x6
715		7-687-614-14	SCREW,BTP3x8
716		7-688-003-11	WASHER,M3,MIDDLE
717		7-688-004-13	WASEHR,M4,MIDDLE,WHITE
718		7-688-004-11	WASHER,M4,MIDDLE
719		7-688-004-12	WASHER,M4,MIDDLE,BLACK
720		7-682-349-04	SCREW,RK3x10

FRONT PANEL ASSY FRONT PANEL ASSY

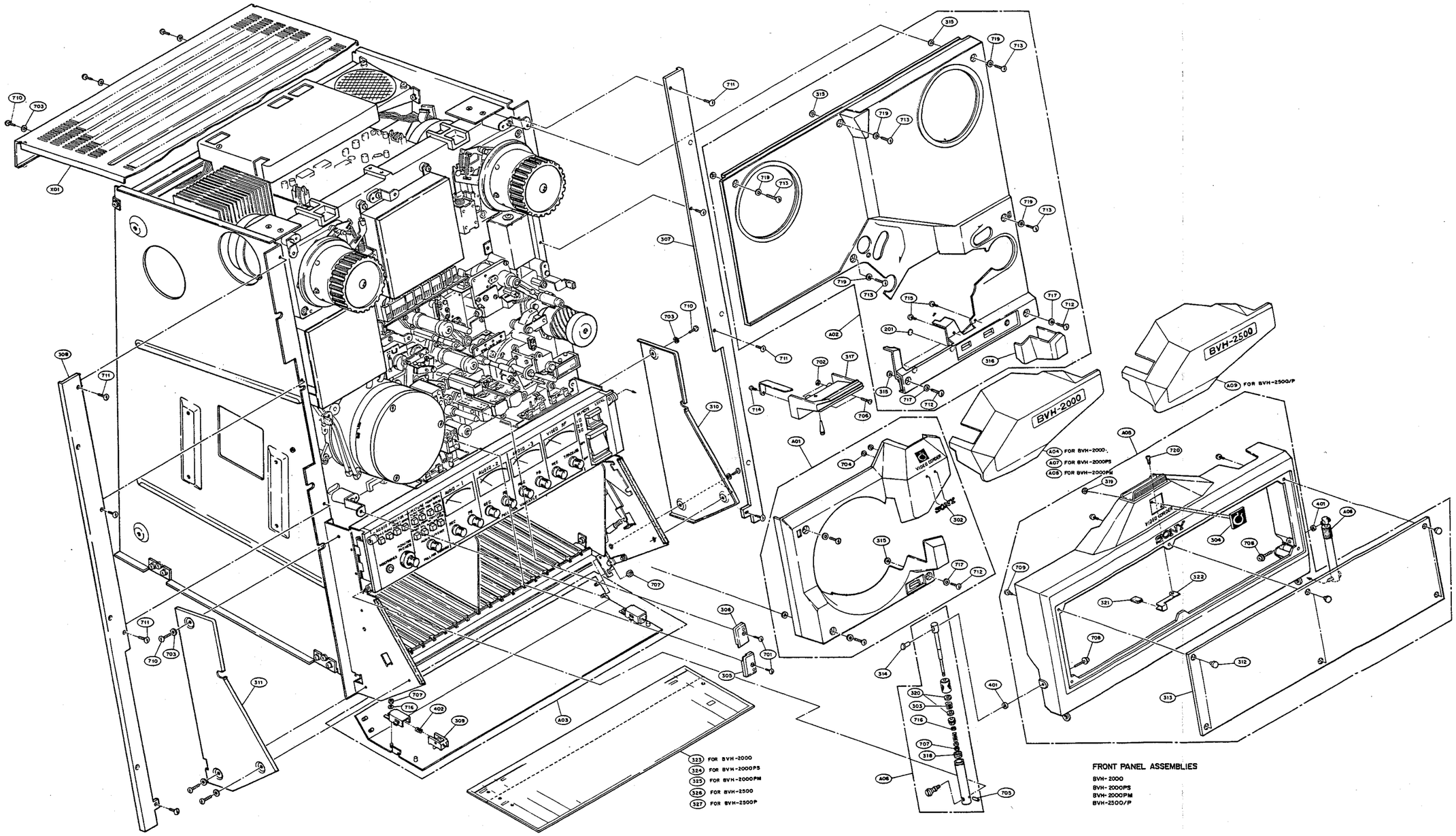

FRONT PANEL ASSEMBLIES
BVH-2000
BVH-2000PS
BVH-2000PM
BVH-2500/P

FRONT PANEL ASSY

FRONT PANEL ASSEMBLIES (BVH-2180)

No.		Part No.	Description
A01	()	A-6004-108-A	PANEL ASSY,DRUM
A02	()	A-6004-146-B	PANEL ASSY,REEL
A03	()	A-6004-110-C	PANEL(1) ASSY,PCB INDICATION
A04	()	A-6004-142-A	COVER ASSY,HEAD (for BVH-2180)
	()	A-6004-143-A	COVER ASSY,HEAD (for BVH-2180PM)
	()	A-6004-144-A	COVER ASSY,HEAD (for BVH-2180PS)
A05	()	A-6004-145-A	COVER ASSY
A06	()	A-6004-114-C	DAMPER ASSY
201		2-523-667-00	CUSHION
303		3-575-368-00	SPRING,COMPRESSION
304		3-657-977-00	EMBLEM,OMEGA
305	()	3-673-869-00	COVER(T),GUIDE
306	()	3-673-870-00	COVER(S),GUIDE
307	()	3-690-518-01	SASH(RIGHT),ORNAMENTAL
308	()	3-690-519-01	SASH(LEFT),ORNAMENTAL
309	()	3-673-883-00	KNOB LOCK
310	()	3-673-917-00	PLATE(R),ORNAMENTAL
311	()	3-673-918-00	PLATE(L),ORNAMENTAL
312	()	3-673-944-00	NUT,M3,ORNAMENTAL
313	()	3-673-946-00	GLASS,WINDOW
314		3-673-965-00	SHAFT,FITTING,DAMPER
315	()	3-673-968-00	STOPPER,SCREW
316	()	3-673-971-02	COVER,CAPSTAN
317	()	3-673-985-00	COVER,FRONT SHIELD
318	()	3-815-122-00	BUSHING,RUBBER
319		3-840-411-00	PUSH NUT 2.4
320		3-701-441-21	WASHER,M4,POLY
321	()	3-673-784-00	CAP
322	()	3-680-318-00	COVER,STOPPER
323		3-680-378-01	LABEL(4),PC BOARD (for BVH-2180)
324		3-680-379-01	LABEL(5),PC BOARD (for BVH-2180PS)
325		3-674-694-02	LABEL(3),PC BOARD (for BVH-2180PM)
326	()	3-690-559-01	LID,UPPER
401	()	4-324-412-00	SPACER
402		4-864-521-00	SPRING COMPRESSION
701		7-621-912-30	SCREW,B2.6x6
702		7-623-923-01	WASHER,M2.6,POLY
703		7-623-954-51	WASHER,M3,FIBER
704		7-624-200-11	PUSH NUT 2
705		7-626-301-31	SPRING PIN 2x10
706		7-682-350-04	SCREW,RK3x12
707		7-684-023-04	NUT,M3
708		7-686-531-01	SCREW,PSW3x14
709		7-686-623-04	SCREW,B3x5
710		7-686-624-09	SCREW,B3x6
711		7-686-625-04	SCREW,B3x8
712		7-686-639-04	SCREW,B4x16,WHITE
713		7-686-639-09	SCREW,B4x16,BLACK
714		7-687-603-14	SCREW,BTP2.6x6
715		7-687-614-14	SCREW,BTP3x8
716		7-688-003-11	WASHER,M3,MIDDLE
717		7-688-004-11	WASEHR,M4,MIDDLE,WHITE
718		7-688-004-11	WASHER,M4,MIDDLE
719		7-688-004-12	WASHER,M4,MIDDLE,BLACK
720		7-682-349-04	SCREW,RK3x10

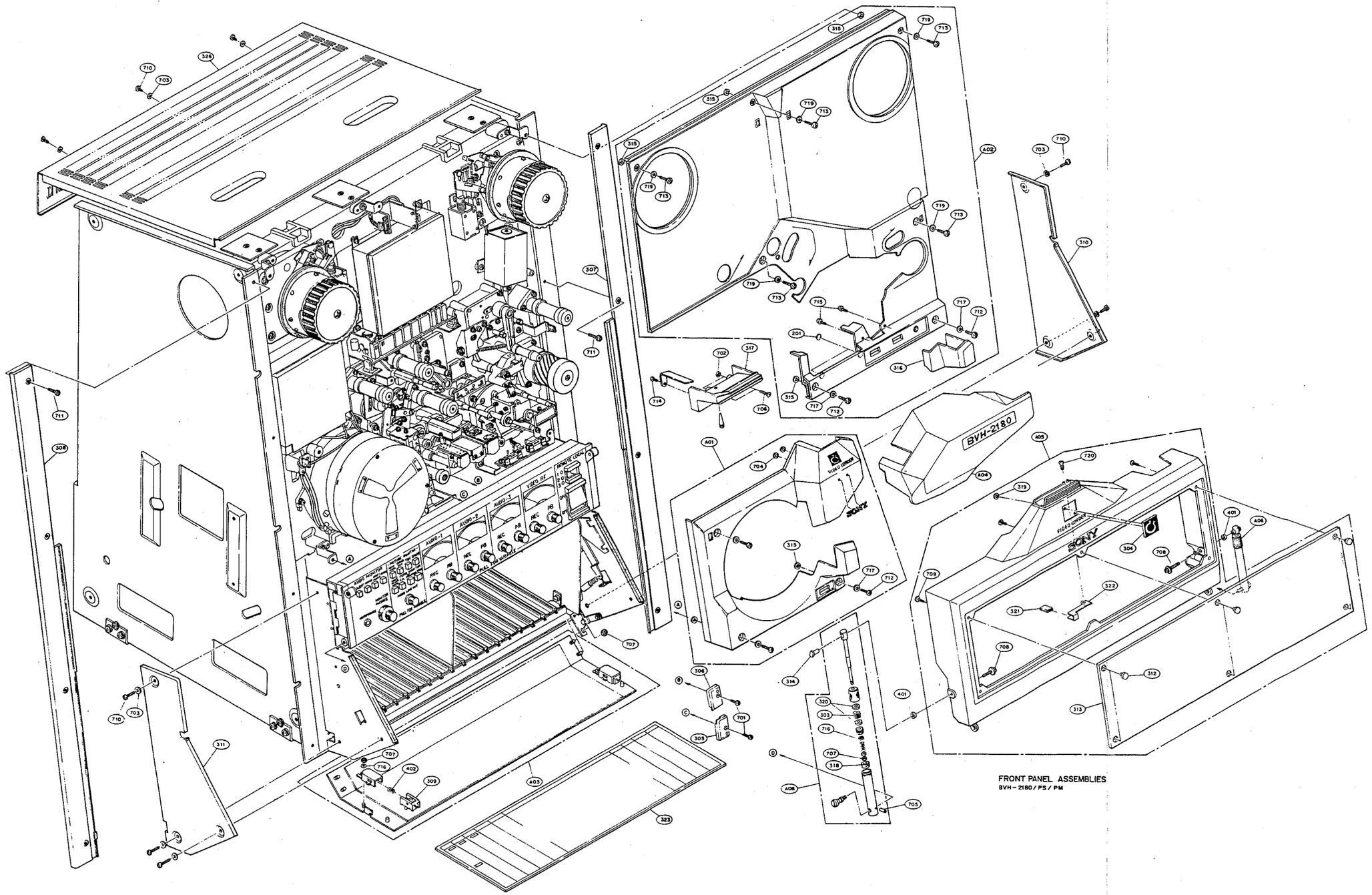

FRONT PANEL ASSEMBLIES
BVH-2180/PS/PM

POWER SUPPLY ASSY

POWER SUPPLY ASSY

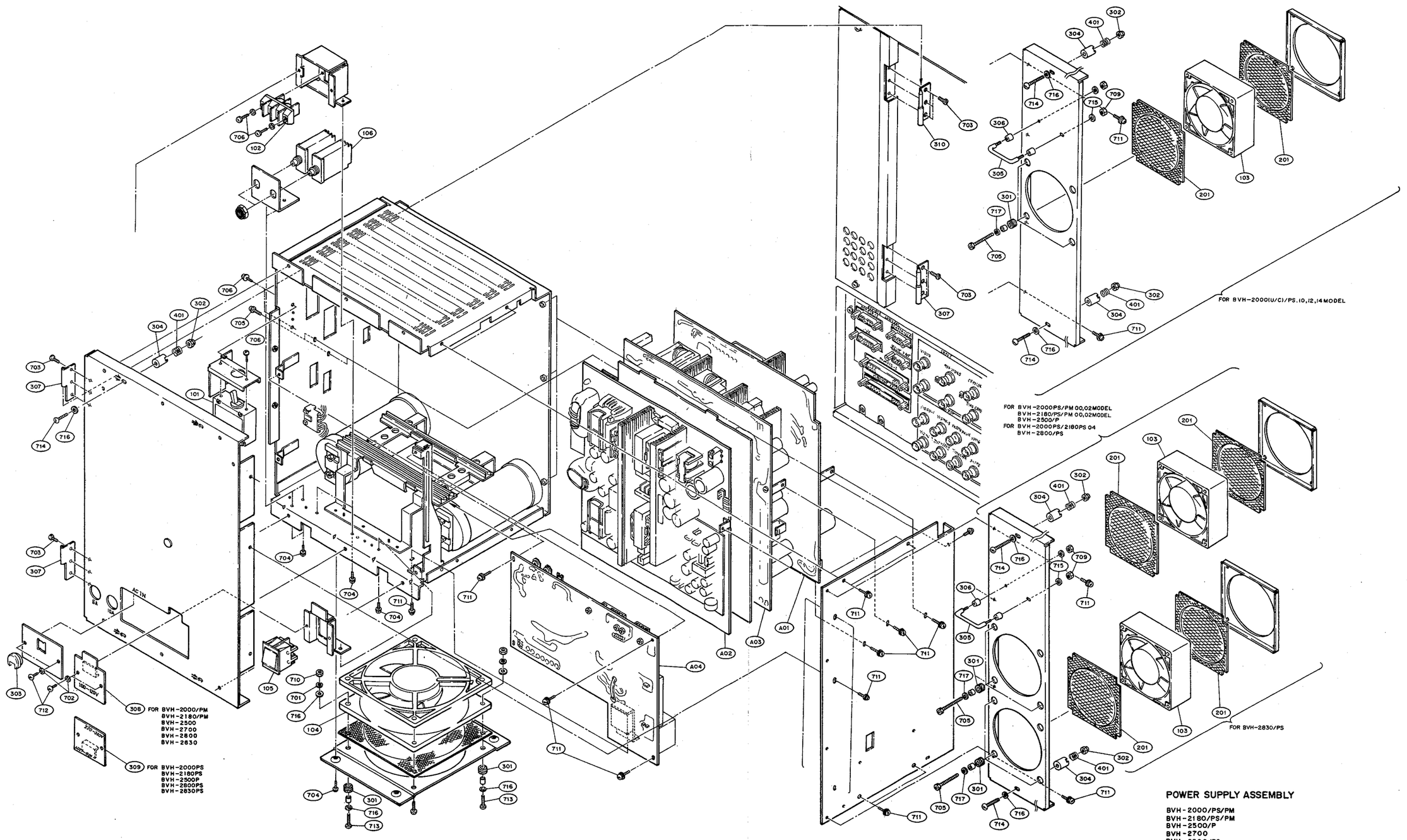

POWER SUPPLY ASSEMBLY

BVH-2000/PS/PM
BVH-2180/PS/PM
BVH-2500/P
BVH-2700
BVH-2800/PS
BVH-2830/PS

POWER SUPPLY ASSEMBLY (BVH-2000/2180/2500/2700/2800/2830)

No.	Part No.	Description
A01 ()	A-4925-002-B ⚠	COMPLETE PCB, FV-01
A02 ()	A-4925-004-B ⚠	COMPLETE PCB, FV-02
A03 ()	A-4925-003-B ⚠	COMPLETE PCB, VV-01
A04 ()	A-4925-001-A ⚠	COMPLETE PCB, AC-39
101	1-532-653-00 ⚠	CIRCUIT PROTECTOR, 50mA/65V
102 ()	1-536-712-00 ⚠	TERMINAL BOARD, 2P
103	1-541-327-11	FAN, DC 12V
104	1-541-203-00	FAN, DC 12V
105	1-554-145-00 ⚠	SWITCH, ROCKER
106	1-532-655-00	CIRCUIT BREAKER
201 ()	2-252-609-00	COVER, FAN
301 ()	3-630-837-00	BUSHING
302 ()	3-680-316-00	NUT, M4, NYLON
303	3-649-728-00 ⚠	STOPPER, CORD
304 ()	3-651-849-00	SPACER, PANEL
305 ()	3-657-653-00	ARM, GUARD
306 ()	3-657-654-00	RING, ORNAMENTAL
307 ()	3-673-774-00	HINGE
308 ()	3-674-641-00	COVER, VS (for BVH-2000/PM) (for BVH-2180/PM) (for BVH-2500) (for BVH-2700) (for BVH-2800) (for BVH-2830)
309 ()	3-674-642-00	COVER, VS (for BVH-2000PS) (for BVH-2180PS) (for BVH-2500P) (for BVH-2800PS) (for BVH-2830PS)
310 ()	3-673-774-11	HINGE
401 ()	3-303-890-01	SPRING, COMPRESSION
701	7-623-210-22	SPRING WASHER, M4
702	7-623-954-51	WASHER, M3, FIBER
703	7-686-624-09	SCREW, B3x6
704	7-682-547-09	SCREW, +B3x6
705	7-682-570-09	SCREW, B4x40
706	7-682-648-01	SCREW, +PS3x8
707	7-682-651-01	SCREW, PS3x14
708	7-682-948-01	SCREW, +PSW3x8
709	7-684-023-04	NUT, M3
710	7-684-024-04	NUT, M4
711	7-686-528-01	SCREW, PSW3x8
712	7-686-625-09	SCREW, B3x8
713	7-686-639-04	SCREW, B4x16
714	7-686-640-09	SCREW, B4x20
715	7-688-003-11	WASHER, M3, MIDDLE
716	7-688-004-12	WASHER, M4, MIDDLE, BLACK
717	7-688-005-02	WASHER, M5, SMALL, BLACK

CONNECTOR PANEL ASSEMBLY (BVH-2000/2180/2500)

No.	Part No.	Description
A01 ()	A-6011-062-A	COMPLETE PCB,VM-01
A02 ()	A-6013-043-A	COMPLETE PCB,LA-02 (for BVH-2000/PS/PM 00,02) (for BVH-2180/PS/PM 00,02) (for BVH-2500/P)
A03 ()	A-6025-082-A	COMPLETE PCB,CN-49 (for NTSC,PS,PM,00,02,04 MODEL)
A04 ()	A-6013-057-A	COMPLETE PCB,LA-02 (for BVH-2000PS/2180PS 04)
A05 ()	A-6025-095-A	COMPLETE PCB,CN-49 (for 10,12,14 MODEL)
101	1-507-552-21	JACK,PHONE
102	1-509-176-51	RECEPTACLE 3P,MALE
103	1-509-184-51	RECEPTACLE 3P,FEMALE
104	1-509-471-00	RECEP.,18P,FEMALE
105	1-552-078-00	SWITCH,SLIDE
106	1-560-769-00	RECEP.,D-SUB,15-PIN,MALE
107	1-561-655-00	RECEP.,D-SUB,9-PIN,FEMALE
108	1-561-781-21	RECEP.,BNC
109	1-561-897-00	RECEP.,D-SUB,15-PIN,FEMALE
110	1-561-898-00	RECEP.,D-SUB,37-PIN,FEMALE
111	1-561-899-00	RECEP.,D-SUB,50-PIN,FEMALE
112 ()	1-606-713-00	CN-37 BOARD (WITHOUT COMPONENT)
201	2-090-229-00	NUT,PLATE (for NTSC,PS,PM,00,02,04 MODEL)
301	3-680-316-00	NUT,M4,NYLON
302 ()	3-651-849-00	SPACER,PANEL
303	3-651-875-00	HINGE,FRONT
304 ()	3-673-859-04	LABEL,CONNECTOR (FOR BVH-2000/PS/PM 00,02 BVH-2180/PS/PM 00,02 BVH-2500/P FOR BVH-2000PS/2180PS 04)
305 ()	3-673-910-00	SCREW,CONNECTOR
306 ()	3-701-822-00	HOLDER,WIRE
307 ()	3-703-150-11	CLAMP
308 ()	3-693-059-02	LABEL(NS) CONNECTOR (for BVH-2000(U/C)PS 10,12,14)
401	4-812-134-11	RIVET,NYLON
402 ()	3-303-890-01	SPRING,COMPRESSION
701	7-621-559-20	SCREW,K2.6x4
702	7-621-559-30	SCREW,K2.6x5
703	7-621-912-38	SCREW,B2.6x6
704	7-682-247-09	SCREW,K3x6
705	7-684-023-04	NUT,M3
706	7-686-527-01	SCREW,PSW3x6
707	7-686-625-09	SCREW,B3x8
708	7-686-640-09	SCREW,B4x20
709	7-688-004-12	WASHER,M4,MIDDLE,BLACK

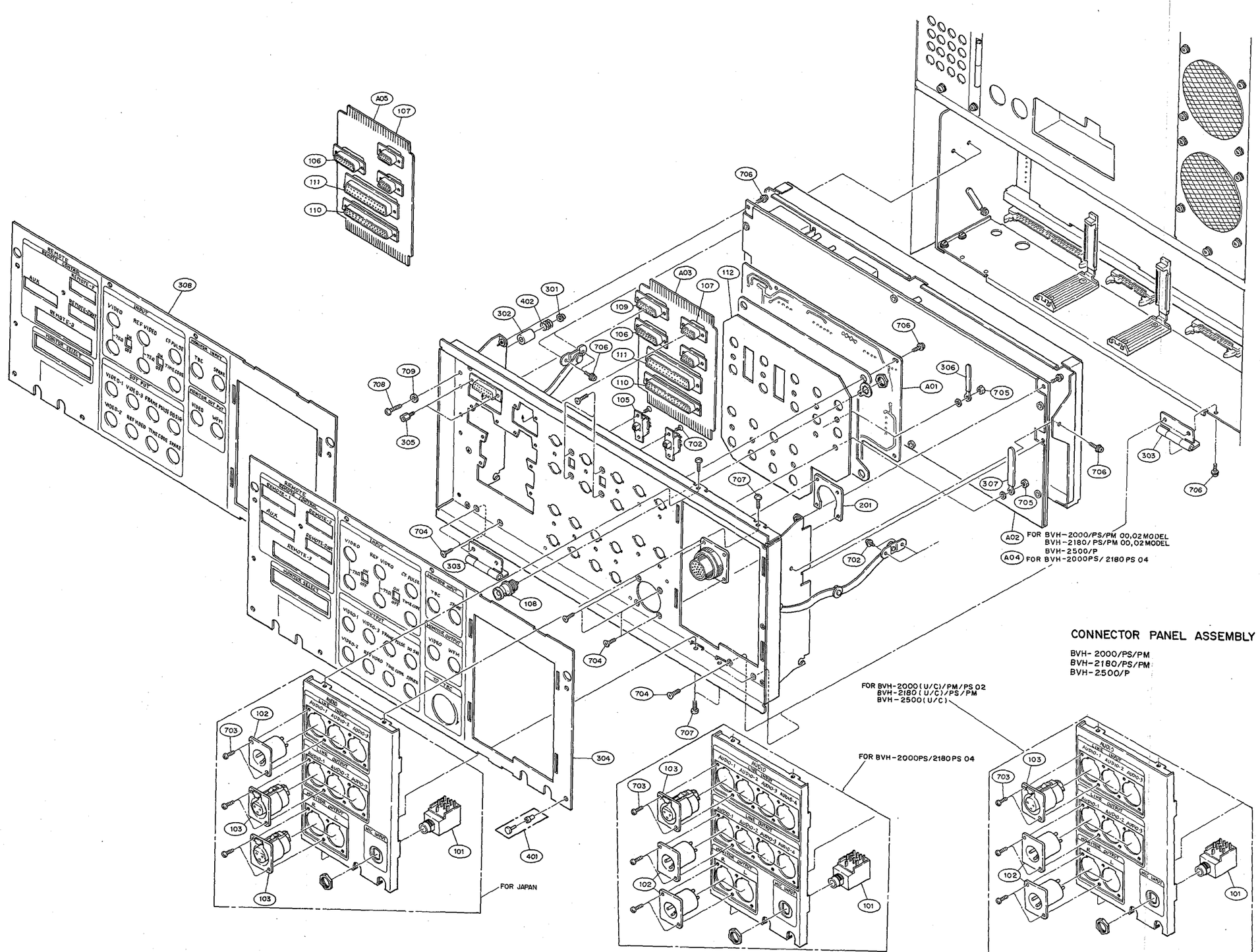

CONNECTOR PANEL ASSEMBLY

BVH-2000/PS/PM
BVH-2180/PS/PM
BVH-2500/P

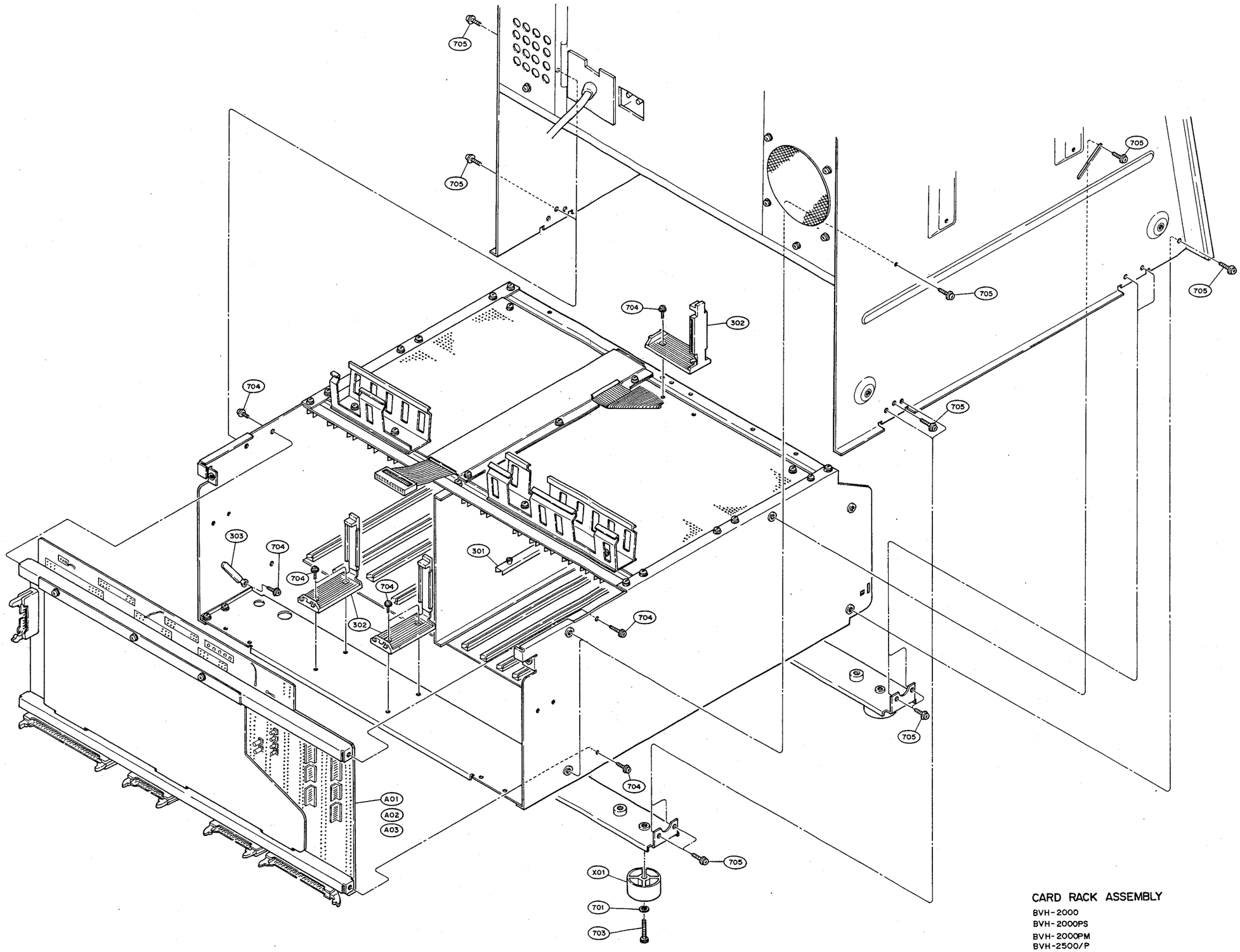

CARD RACK ASSEMBLY

BVH-2000
BVH-2000PS
BVH-2000PM
BVH-2500/P

CARD RACK ASSEMBLY (BVH-2000/2180/2500/2700)

No.	Part No.	Description
A01 ()	A-6025-092-A	COMPLETE PCB,MB-14A (for BVH-2000/PS/PM) (for BVH-2180/PS/PM)
A02 ()	A-6025-088-A	COMPLETE PCB,MB-60 (for BVH-2500/P)
A03 ()	A-6025-094-A	COMPLETE PCB,MB-74 (for BVH-2700)
X01	X-4836-202-X	FOOT ASSY
301 ()	3-673-676-31	RAIL,PC BOARD GUIDE
302	3-673-796-02	CLAMP,FLAT CABLE
303 ()	3-701-822-00	HOLDER,WIRE
701	7-623-210-22	SPRING WASHER,M4
703	7-683-425-04	SCREW,C4x20
704	7-686-527-01	SCREW,PSW3x6
705	7-686-548-01	SCREW,PSW4x8

BVH-2180

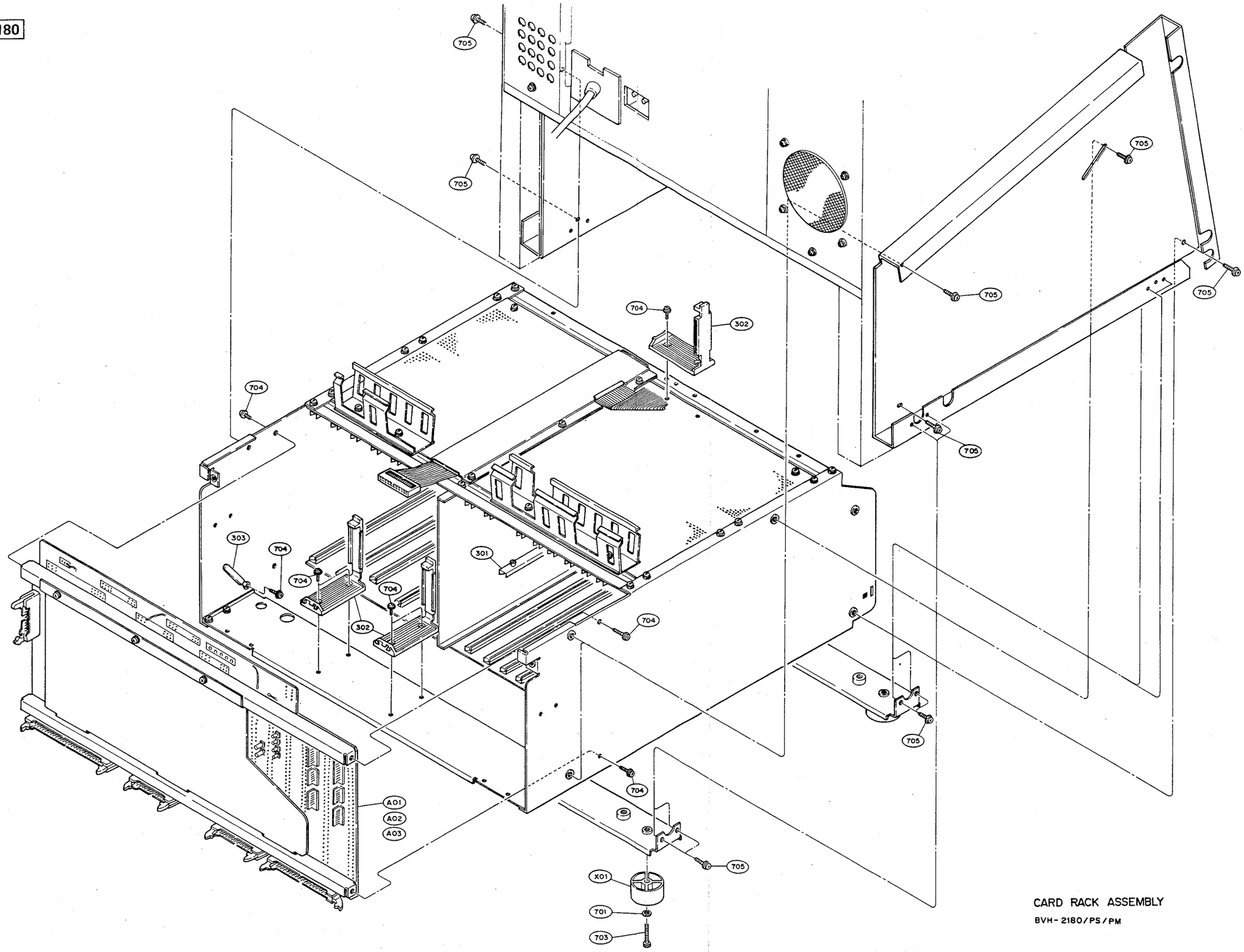

CARD RACK ASSEMBLY
BVH-2180/PS/PM

CARD RACK ASSEMBLY (BVH-2000/2180/2500/2700)

No.		Part No.	Description
A01	( )	A-6025-092-A	COMPLETE PCB,MB-14A (for BVH-2000/PS/PM) (for BVH-2180/PS/PM)
A02	( )	A-6025-088-A	COMPLETE PCB,MB-60 (for BVH-2500/P)
A03	( )	A-6025-094-A	COMPLETE PCB,MB-74 (for BVH-2700)
X01		X-4836-202-X	FOOT ASSY
301	( )	3-673-676-31	RAIL,PC BOARD GUIDE
302		3-673-796-02	CLAMP,FLAT CABLE
303	( )	3-701-822-00	HOLDER,WIRE
701		7-623-210-22	SPRING WASHER,M4
703		7-683-425-04	SCREW,C4x20
704		7-686-527-01	SCREW,PSW3x6
705		7-686-548-01	SCREW,PSW4x8

LEVEL CONTROL PANEL ASSEMBLY (BVH-2000/2180/2500)

No.		Part No.	Description
A01	()	A-6013-042-A	COMPLETE PCB,VR-05 (for BVH-2000/PS/PM 00,02) (for BVH-2180/PS/PM 00,02) (for BVH-2500/P)
A02	()	A-6013-056-A	COMPLETE PCB,VR-07 (for BVH-2000PS/2180PS 04)
X01		X-3668-056-0	KNOB(W) ASSY,CONTROL
X02		X-3673-635-0	KNOB(1) ASSY,CONTROL
X03	()	X-3673-638-0	SASH(RIGHT) ASSY,METER
X04	()	X-3673-639-0	SASH(LEFT) ASSY,METER
X05		X-3673-650-0	KNOB(2) ASSY,CONTROL
X06	()	X-3673-657-0	SUPPORT(RIGHT) ASSY,ROLLER
X07	()	X-3673-658-0	SUPPORT(RIGHT) ASSY,STAY
X08	()	X-3673-659-0	SUPPORT(LEFT) ASSY,ROLLER
X09	()	X-3673-660-0	SUPPORT(LEFT) ASSY,STAY
X10	()	X-3673-661-0	ARM(RIGHT) ASSY,CAM
X11	()	X-3673-662-0	ARM(LEFT) ASSY,CAM
X12	()	X-3673-663-0	SUPPORT(RIGHT) ASSY,PANEL
X13	()	X-3673-664-0	SUPPORT(LEFT) ASSY,PANEL
X14	()	X-3673-667-0	HINGE,MAIN,RIGHT ASSY
X15	()	X-3673-668-0	HINGE,MAIN,LEFT ASSY
101		1-520-450-12	METER,VU
102		1-520-451-12	METER,VIDEO/RF
103		1-554-066-00	SWITCH,ROCKER
104	()	1-606-709-00	MS-07 BOARD (WITHOUT COMPONENT, for BVH-2000/PS/PM 00,02 for BVH-2180/PS/PM 00,02 for BVH-2500/P)
105	()	1-606-711-00	ML-02 BOARD (WITHOUT COMPONENT, for BVH-2000/PS/PM 00,02 for BVH-2180/PS/PM 00,02 for BVH-2500/P)
106	()	1-606-710-00	MS-08 BOARD (WITHOUT COMPONENT, for BVH-2000PS/2180PS 04)
107	()	1-606-712-00	ML-03 BOARD (WITHOUT COMPONENT, for BVH-2000PS/2180PS 04)
201	()	2-252-615-00	CUSHION,SWITCH
202	()	2-252-623-02	PLATE,SWITCH,LEVER
301		3-483-026-00	BRACKET,MOTOR THRUST
302	()	3-483-026-31	BRACKET,MOTER THRUST
303		3-643-383-00	COVER,LAMP
304		3-644-718-00	SPRING COMPRESSION
305		3-688-028-00	KNOB(SMALL),LEVER SWITCH
306	()	3-673-653-00	MIRROR
307	()	3-673-769-00	GUARD,SWITCH
308	()	3-673-784-00	CAP
309	()	3-673-813-00	HOLDER,METER
310	()	3-673-842-00	GUARD,POWER SWITCH
311	()	3-673-886-00	PANEL,METER (for BVH-2000/PS/PM 00,02) (for BVH-2180/PS/PM 00,02) (for BVH-2500/P)
312	()	3-673-922-00	HINGE
313	()	3-673-957-00	PIN,HINGE
314	()	3-674-658-00	PANEL,METER (for BVH-2000PS/2180PS 04)
315	()	3-674-691-00	COVER,LED
701		7-624-105-04	STOP RING,E2.3
702		7-624-106-04	STOP RING,E3
703		7-682-247-09	SCREW,K3x6
704		7-684-023-04	NUT,M3
705		7-685-233-14	SCREW,K2.6x6
706		7-686-450-01	SCREW,PS3x12
707		7-686-527-01	SCREW,PSW3x6
708		7-686-528-01	SCREW,PSW3x8

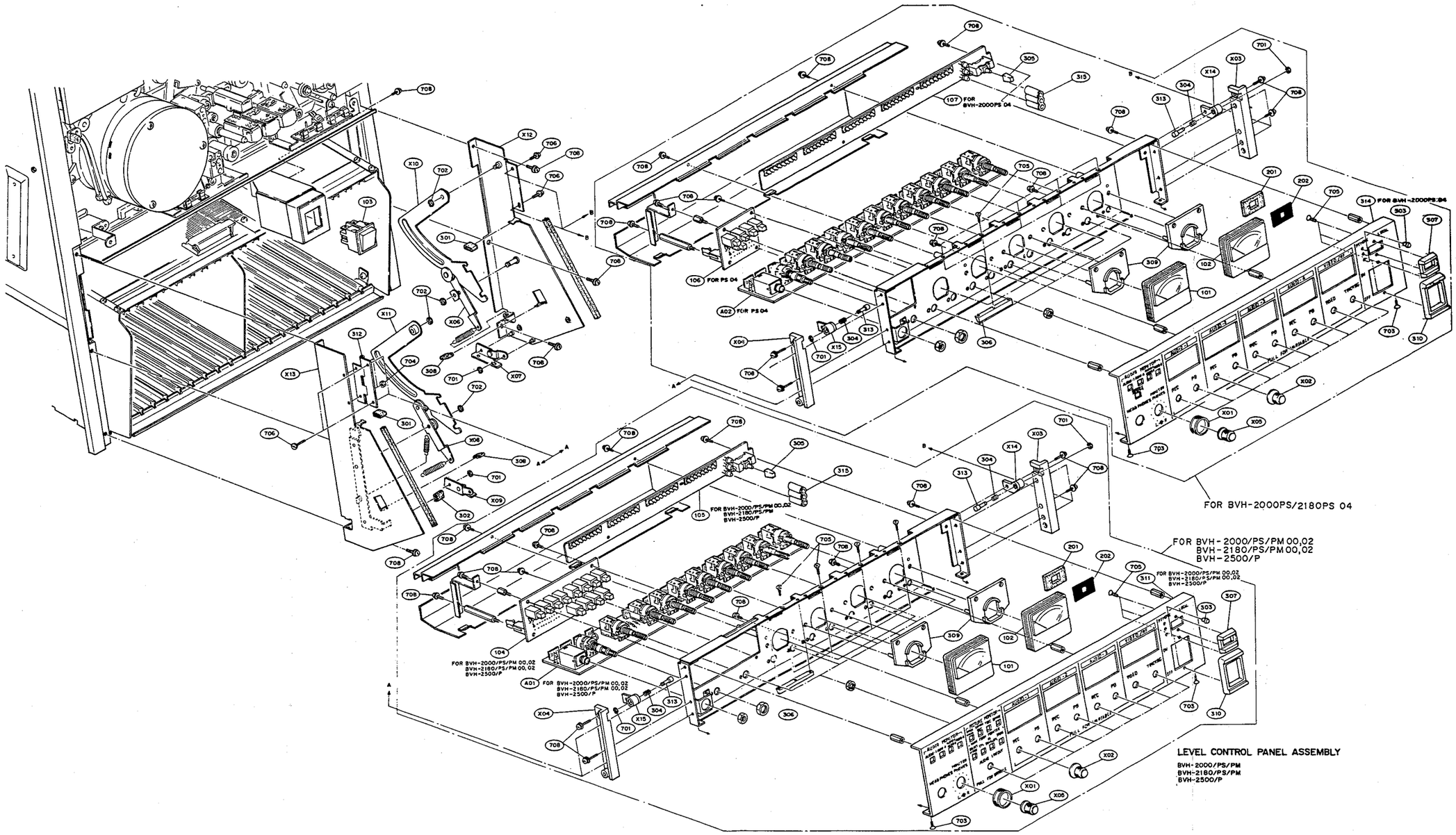
FOR BVH-2000PS/2180PS 04
FOR BVH-2000/PS/PM 00,02
BVH-2180/PS/PM 00,02
BVH-2500/P
LEVEL CONTROL PANEL ASSEMBLY
BVH-2000/PS/PM
BVH-2180/PS/PM
BVH-2500/P

REEL TABLE ASSY

REEL TABLE ASSY

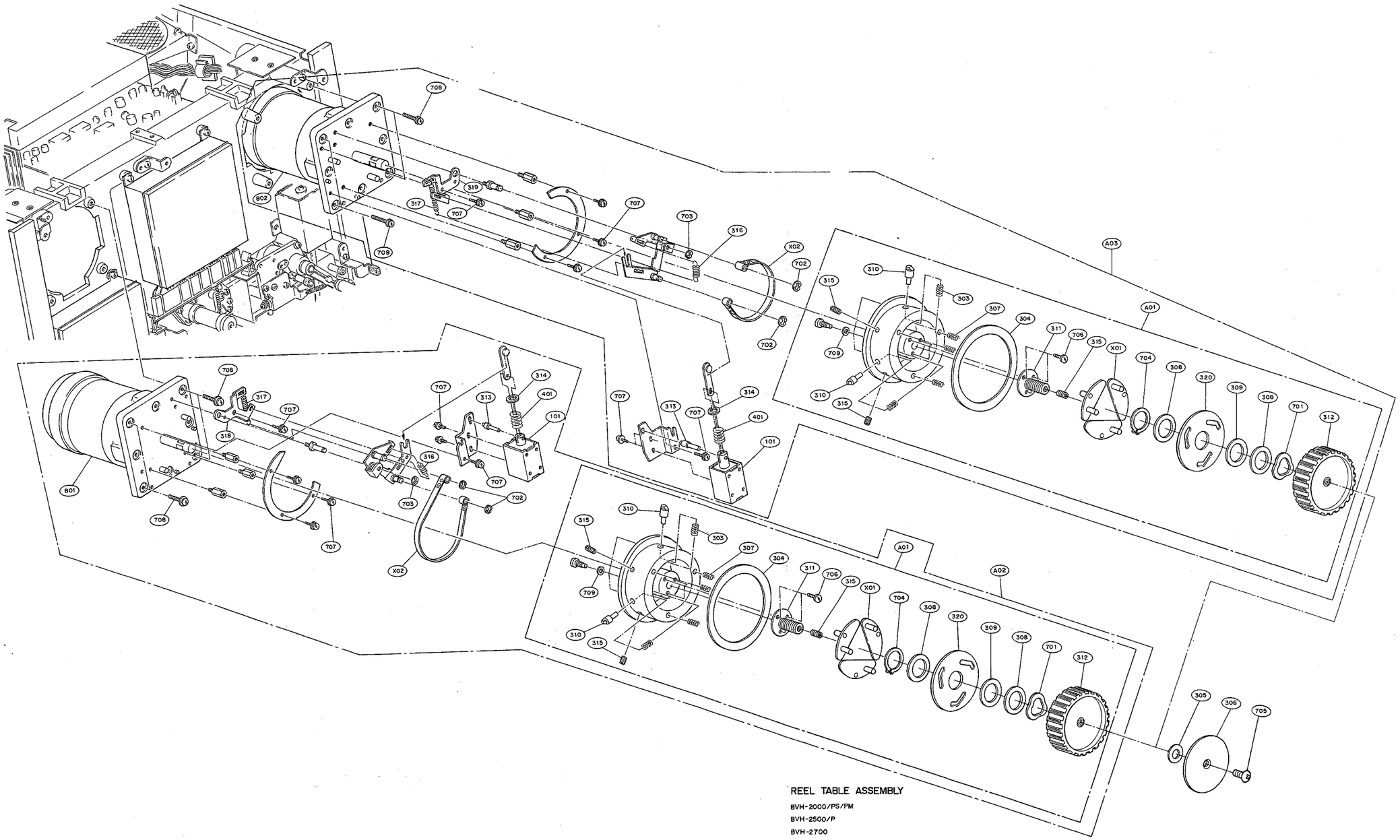

REEL TABLE ASSEMBLY

BVH-2000/PS/PM
BVH-2500/P
BVH-2700

REEL TABLE ASSEMBLY (BVH-2000/2500/2700)

No.		Part No.	Description
A01	()	A-6039-016-B	TABLE ASSY,REEL
A02		A-6039-020-A	MOTOR ASSY,SUPPLY REEL
A03		A-6039-021-A	MOTOR ASSY,TAKE-UP REEL
X01	()	X-3651-315-0	CLAW ASSY,REEL
X02		X-3673-601-0	BAND ASSY,BRAKE
101		1-454-304-00	SOLENOID,12V,15/180 OHM
303		3-558-760-00	SPRING,COMPRESSION
304	()	3-651-371-02	SHEET,REEL
305	()	3-651-372-00	WASHER,REEL
306	()	3-651-373-00	COVER
307	()	3-651-375-00	SPRING,COMPRESSION
308	()	3-651-377-00	SHEET,FRICTION
309	()	3-651-378-00	SHEET,FRICTION ADJUSTMENT
310	()	3-673-680-00	PIN,REEL STOPPER
311	()	3-673-779-00	SHAFT,MAIN
312	()	3-673-780-00	KNOB,REEL RETAINER
313	()	3-673-810-00	PIN,SOLENOID
314		3-701-447-21	WASHER,M10,POLY
315		3-701-512-01	SET SCREW,4x8
316		3-447-073-00	SPRING,TENSION
317		3-639-371-00	SPRING,TENSION
318	()	3-680-319-01	PLATE(S),STOPPER
319	()	3-680-320-01	PLATE(T),STOPPER
320	()	3-673-711-02	CAM,REEL
401		4-836-109-00	SPRING,COMPRESSION
701		7-623-711-07	WASHER,M20,WAVE
702		7-624-105-04	STOP RING,E2.3
703		7-624-106-04	STOP RING,E3
704		7-624-197-71	STOP RING,C20
705		7-682-388-04	SCREW,RK6x12
706		7-686-448-01	SCREW,PS3x8
707		7-686-527-01	SCREW,PSW3x8
708		7-686-552-01	SCREW,PSW4x16
709		7-688-003-01	WASHER,M3,SMALL
801		8-838-028-01	MOTOR,S REEL,BHF-2200A
802		8-838-028-11	MOTOR,T REEL,BHF-2200B

REEL TABLE ASSY REEL TABLE ASSY

BVH-2180

REEL TABLE ASSEMBLY
BVH-2180/PS/PM

REEL TABLE ASSEMBLY (BVH-2180)

No.		Part No.	Description
A01	()	A-6039-016-B	TABLE ASSY,REEL
A02		A-6039-024-A	MOTOR ASSY,SUPPLY REEL
A03		A-6039-025-A	MOTOR ASSY,TAKE-UP REEL
X01	()	X-3651-315-0	CLAW ASSY,REEL
X02		X-3673-601-0	BAND ASSY,BRAKE
101		1-454-304-21	SOLENOID,12V,15/180 OHM
301		3-573-962-00	SPRING,TENSION
303		3-558-760-00	SPRING,COMPRESSION
304	()	3-651-371-02	SHEET,REEL
305	()	3-651-372-00	WASHER,REEL
306	()	3-651-373-00	COVER
307	()	3-651-375-00	SPRING,COMPRESSION
308	()	3-651-377-00	SHEET,FRICTION
309	()	3-651-378-00	SHEET,FRICTION ADJUSTMENT
310	()	3-673-680-00	PIN,REEL STOPPER
311	()	3-673-779-00	SHAFT,MAIN
312	()	3-673-780-00	KNOB,REEL RETAINER
313	()	3-673-810-00	PIN,SOLENOID
314		3-701-447-21	WASHER,M10,POLY
315		3-701-512-01	SET SCREW,4x8
316		3-690-558-01	SPRING,TENSION
317		3-690-557-01	SPRING,TENSION
318	()	3-680-319-01	PLATE(S),STOPPER
319	()	3-680-320-01	PLATE(T),STOPPER
320	()	3-673-711-02	CAM,REEL
401		4-836-109-00	SPRING,COMPRESSION
701		7-623-711-07	WASHER,M20,WAVE
702		7-624-105-04	STOP RING,E2.3
703		7-624-106-04	STOP RING,E3
704		7-624-197-71	STOP RING,C20
705		7-682-388-04	SCREW,RK6x12
706		7-686-448-01	SCREW,PS3x6
707		7-686-527-01	SCREW,PSW3x8
708		7-686-552-01	SCREW,PSW4x16
709		7-688-003-01	WASHER,M3,SMALL
801		8-838-088-01	MOTOR,S REEL,BHF-2201A
802		8-838-089-01	MOTOR,T REEL,BHF-2201B

TENSION ARM & TIMER ROLLER ASSEMBLY (BVH-2000/2180/2500/2700)

No.	Part No.	Description
A01	A-6042-018-C	ARM ASSY,S TENSION
A02	A-6042-019-A	ARM ASSY,T TENSION (for BVH-2000/PS/PM) (for BVH-2500/P) (for BVH-2700)
	A-6042-021-A	ARM ASSY,T TENSION (for BVH-2180/PS/PM)
A03	A-6046-028-A	ROLLER ASSY,GUIDE
A04	A-6045-018-C	ROLLER ASSY (for NTSC,PM)
A05	A-6045-019-C	ROLLER ASSY (for PS,P)
X01 ()	X-3673-610-0	SHAFT ASSY,GR
X02 ()	X-3673-693-0	WEIGHT ASSY,BALANCE (for PS,P)
103 ()	1-606-698-00	TR-07 BOARD
201	2-263-515-00	SPRING,COMPRESSION
301 ()	3-148-662-00	SPRING,COMPRESSION
302	3-534-233-00	NUT,ADJUSTMENT
303	3-534-235-00	SPRING,COMPRESSION
304 ()	3-534-255-00	CUSHION,BRAKE
305	3-625-177-00	STOP RING 13
306 ()	3-651-364-00	COLLAR,GR
307	3-651-396-00	SPRING,COMPRESSION
308	3-651-607-00	BEARING,BALL
309	3-656-948-00	BEARING,BALL
310	3-659-213-00	BEARING,BALL
311 ()	3-663-116-00	SPRING,COMPRESSION
312	3-673-614-00	DAMPER,AIR
313	3-673-616-00	COLLAR,GR
314 ()	3-673-617-00	COLLAR,RETAINER,PRE-LOAD
315 ()	3-673-620-00	ROLLER,T ARM
316	3-673-621-00	CAP,T ARM
319 ()	3-673-627-00	FLANGE,CR UPPER
320 ()	3-673-628-00	FLANGE,CR LOWER
321 ()	3-673-629-00	SHAFT,CR
322 ()	3-673-652-02	SPRING,TENSION
323 ()	3-673-660-00	ROLLER,GUIDE
324 ()	3-673-662-00	FLANGE,GR
325 ()	3-673-663-00	FLANGE,GR UPPER
326 ()	3-673-667-00	PIECE
327 ()	3-673-694-00	HOLDER,DME
328	3-673-758-00	SPRING,TENSION (for BVH-2000/PS/PM) (for BVH-2500/P) (for BVH-2700)
	3-690-507-01	SPRING,TENSION (for BVH-2180/PS/PM)
329	3-674-636-00	HOOK,SPRING
330	3-701-505-00	SET SCREW,3x3
331	3-701-506-01	SET SCREW,3x4
332	3-701-511-00	SET SCREW,4x6
333	3-680-331-01	COLLAR,S-TENSION
334	3-680-332-01	CAP,S-TENSION
701	7-621-981-15	SCREW,PSW2.6x6
702	7-623-208-22	SPRING WASHER,M3
703	7-624-193-07	STOP RING 2,GRIP
704	7-686-452-01	SCREW,PS3x16
705 ()	7-686-553-01	SCREW,PSW4x20
706	7-686-628-04	SCREW,B3x14
707 ()	7-685-133-14	SCREW,BTP2.6x6
708	7-688-003-01	WASHER,M3,SMALL
709	7-686-624-04	SCREW,B3x6
801	8-745-211-00	DME,DM-211

TENSION ARM & TIMER ROLLER

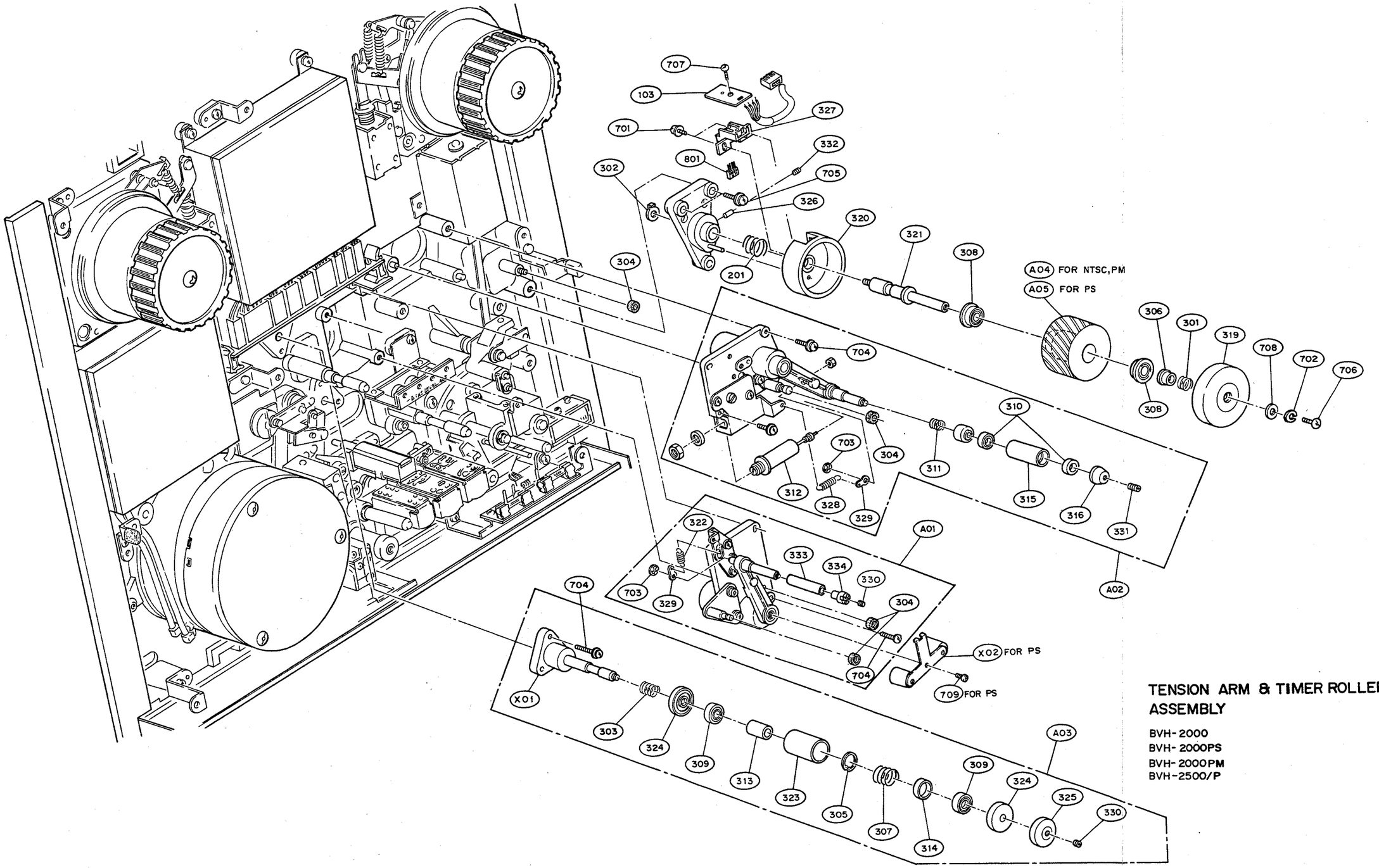

TENSION ARM & TIMER ROLLER ASSEMBLY

BVH-2000
BVH-2000PS
BVH-2000PM
BVH-2500/P

TENSION ARM & TIMER ROLLER

TENSION ARM & TIMER ROLLER ASSEMBLY (BVH-2000/2180/2500/2700)

No.	Part No.	Description
A01	A-6042-018-C	ARM ASSY,S TENSION
A02	A-6042-019-A	ARM ASSY,T TENSION (for BVH-2000/PS/PM) (for BVH-2500/P) (for BVH-2700)
	A-6042-021-A	ARM ASSY,T TENSION (for BVH-2180/PS/PM)
A03	A-6046-028-A	ROLLER ASSY,GUIDE
A04	A-6045-018-C	ROLLER ASSY (for NTSC,PM)
A05	A-6045-019-C	ROLLER ASSY (for PS,P)
X01 ()	X-3673-610-0	SHAFT ASSY,GR
X02 ()	X-3673-693-0	WEIGHT ASSY,BALANCE (for PS,P)
103 ()	1-606-698-00	TR-07 BOARD
201	2-263-515-00	SPRING,COMPRESSION
301 ()	3-148-662-00	SPRING,COMPRESSION
302	3-534-233-00	NUT,ADJUSTMENT
303	3-534-235-00	SPRING,COMPRESSION
304 ()	3-534-255-00	CUSHION,BRAKE
305	3-625-177-00	STOP RING 13
306 ()	3-651-364-00	COLLAR,GR
307	3-651-396-00	SPRING,COMPRESSION
308	3-651-607-00	BEARING,BALL
309	3-656-948-00	BEARING,BALL
310	3-659-213-00	BEARING,BALL
311 ()	3-663-116-00	SPRING,COMPRESSION
312	3-673-614-00	DAMPER,AIR
313	3-673-616-00	COLLAR,GR
314 ()	3-673-617-00	COLLAR,RETAINER,PRE-LOAD
315 ()	3-673-620-00	ROLLER,T ARM
316	3-673-621-00	CAP,T ARM
319 ()	3-673-627-00	FLANGE,CR UPPER
320 ()	3-673-628-00	FLANGE,CR LOWER
321 ()	3-673-629-00	SHAFT,CR
322 ()	3-673-652-02	SPRING,TENSION
323 ()	3-673-660-00	ROLLER,GUIDE
324 ()	3-673-662-00	FLANGE,GR
325 ()	3-673-663-00	FLANGE,GR UPPER
326 ()	3-673-667-00	PIECE
327 ()	3-673-694-00	HOLDER,DME
328	3-673-758-00	SPRING,TENSION (for BVH-2000/PS/PM) (for BVH-2500/P) (for BVH-2700)
	3-690-507-01	SPRING,TENSION (for BVH-2180/PS/PM)
329	3-674-636-00	HOOK,SPRING
330	3-701-505-00	SET SCREW,3x3
331	3-701-506-01	SET SCREW,3x4
332	3-701-511-00	SET SCREW,4x6
333	3-680-331-01	COLLAR,S-TENSION
334	3-680-332-01	CAP,S-TENSION
701	7-621-981-15	SCREW,PSW2.6x6
702	7-623-208-22	SPRING WASHER,M3
703	7-624-193-07	STOP RING 2,GRIP
704	7-686-452-01	SCREW,PS3x16
705 ()	7-686-553-01	SCREW,PSW4x20
706	7-686-628-04	SCREW,B3x14
707 ()	7-685-133-14	SCREW,BTP2.6x6
708	7-688-003-01	WASHER,M3,SMALL
709	7-686-624-04	SCREW,B3x6
801	8-745-211-00	DME,DM-211

TENSION ARM & TIMER ROLLER

BVH-2180

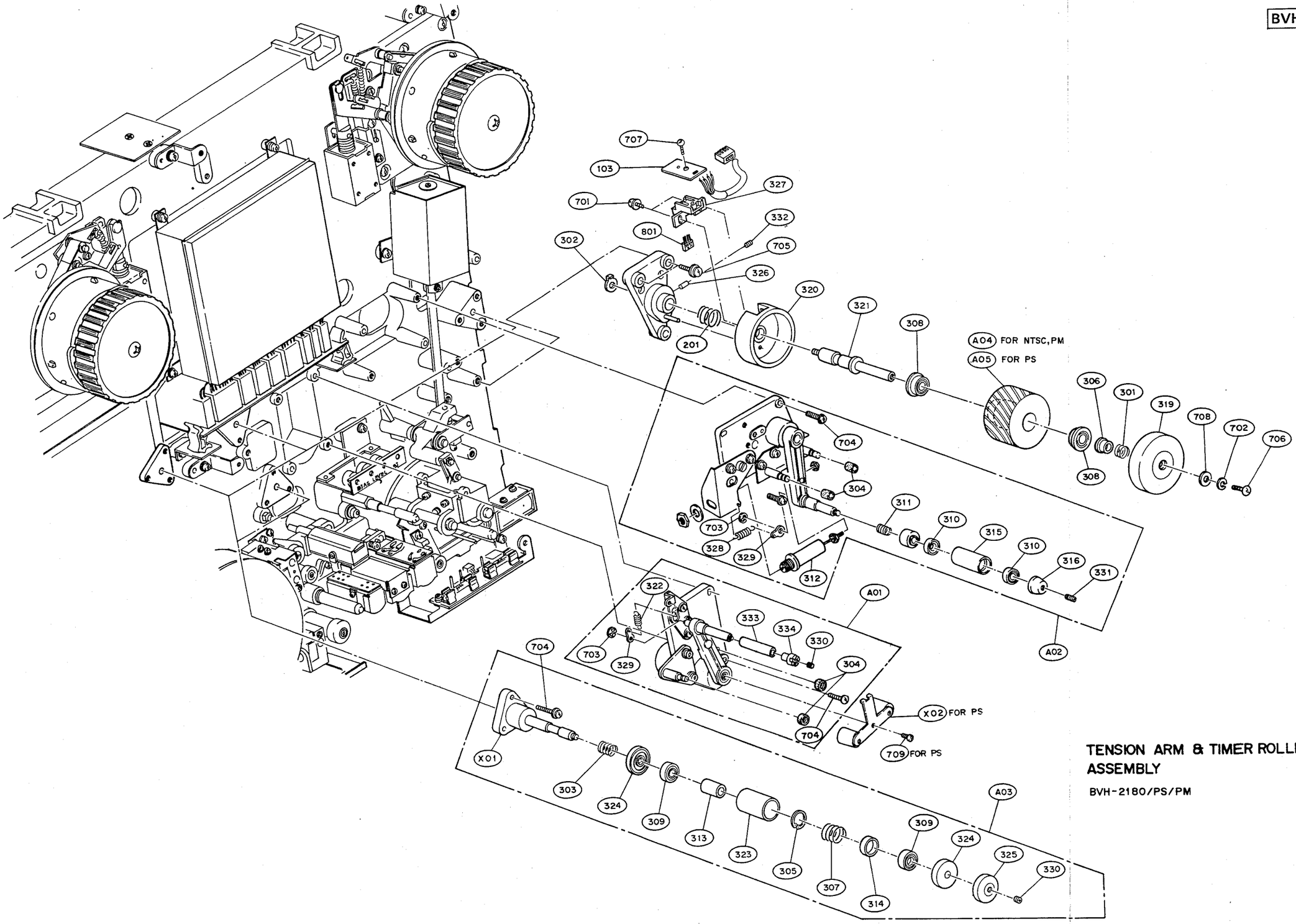

TENSION ARM & TIMER ROLLER ASSEMBLY

BVH-2180/PS/PM

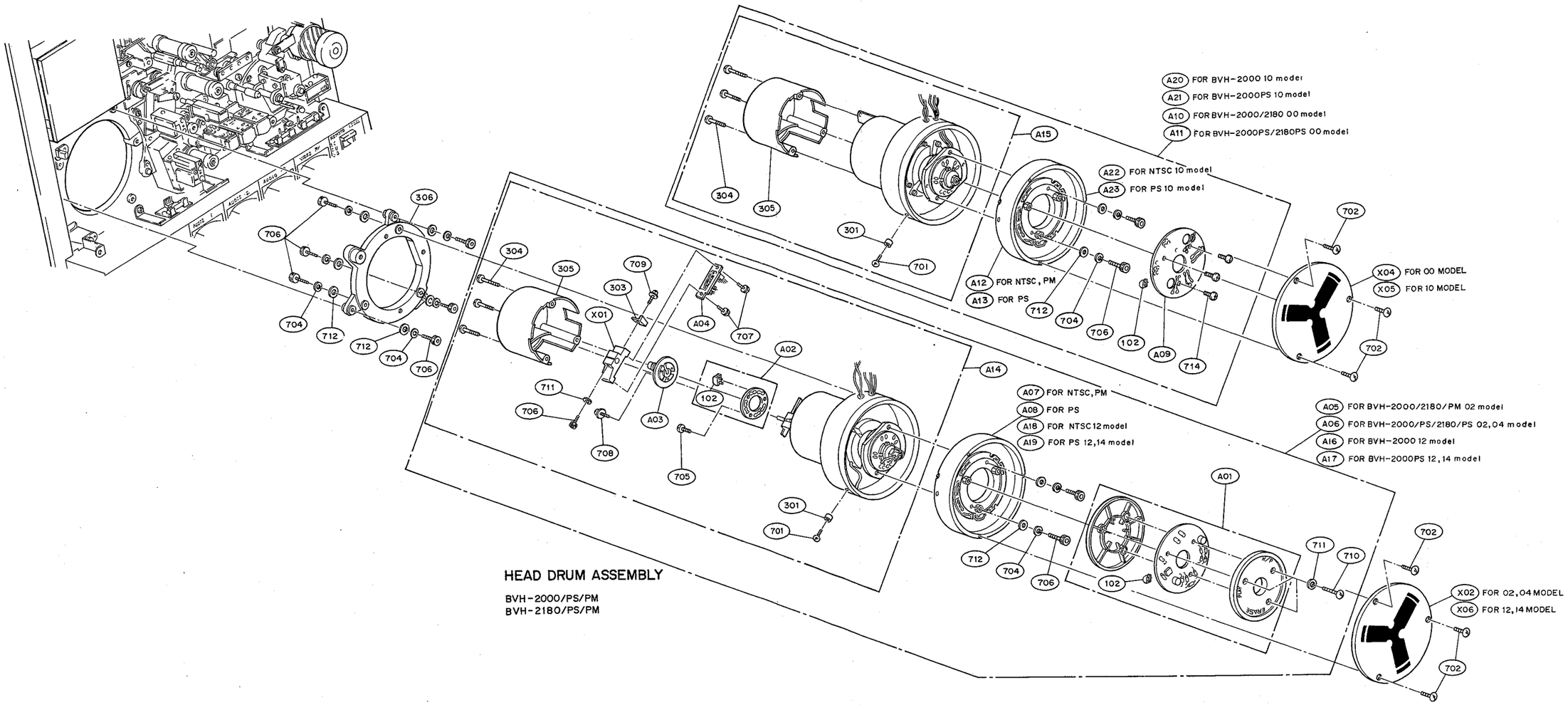

HEAD DRUM ASSEMBLY

BVH-2000/PS/PM
BVH-2180/PS/PM

HEAD DRUM ASSEMBLY (BVH-2000/2180)

No.	Part No.	Description
A01 ()	A-6049-008-A	COMPLETE PCB,DR-13R
A02 ()	A-6026-023-B	MOUNTED PCB,SL-07
A03	A-6709-428-B	MOUNTED PCB,SL-08
A04	A-6709-429-C	MOUNTED PCB,SL-09
A05	A-6050-147-A	HEAD DRUM ASSY,DMH-17A-R (for NTSC 02,PM 02)
A06	A-6050-148-A	HEAD DRUM ASSY,DMH-18A-R (for PS 02,04)
A07	A-6052-046-A	UPPER DRUM ASSY,DMR-17-R (for NTSC 02,PM 02)
A08	A-6052-047-A	UPPER DRUM ASSY,DMR-18-R (for PS 02,04)
A09 ()	A-6010-070-A	MOUNTED PCB,DR-20 (Except for 12,14)
A10	A-6050-158-A	HEAD DRUM ASSY,DMH-19A-R (for NTSC 00,PM 00)
A11	A-6050-160-A	HEAD DRUM ASSY,DMH-20A-R (for PS 00)
A12	A-6052-054-A	UPPER DRUM ASSY,DMR-19-R (for NTSC 00,PM 00)
A13	A-6052-055-A	UPPER DRUM ASSY,DMR-20-R (for PS 00)
A14	A-6053-021-A	LOWER DRUM ASSY,DML-17A-R (for 02,04,12,14)
A15	A-6053-022-A	LOWER DRUM ASSY,DML-19A-R (for 00,10)
A16	A-6050-423-A	HEAD DRUM ASSY,DMH-29A-R (for NTSC 12)
A17	A-6050-425-A	HEAD DRUM ASSY,DMH-30A-R (for PS 12,14)
A18	A-6052-080-A	UPPER DRUM ASSY,DMR-29-R (for NTSC 12)
A19	A-6052-082-A	UPPER DRUM ASSY,DMR-30-R (for PS 12,14)
A20	A-6050-427-A	HEAD DRUM ASSY,DMH-31A-R (for NTSC 10)
A21	A-6050-429-A	HEAD DRUM ASSY,DMH-32A-R (for PS 10)
A22	A-6052-084-A	UPPER DRUM ASSY,DMR-31-R (for NTSC 10)
A23	A-6052-086-A	UPPER DRUM ASSY,DMR-32-R (for PS 10)
X01 ()	X-3673-405-0	FITTING BLOCK ASSY,FG
X02	X-3673-651-0	LID ASSY,DRUM
X04	X-3673-681-0	LID ASSY,DRUM
X05	X-3673-707-1	LID ASSY(NS),DRUM
X06	X-3673-708-1	LID ASSY(NS),DRUM
102	1-560-240-00	CONTACT
301 ()	3-654-914-00	STOPPER,TAPE
303 ()	3-673-423-00	PLATE,SCALE
304 ()	3-673-432-00	SCREW,M3x20,COVER
305 ()	3-673-434-00	COVER,SLIP RING
306	3-673-431-00	SLANT TABLE,DRUM
701	7-621-909-43	SCREW,P2.6x6
702	7-621-912-38	SCREW,B2.6x6
703	7-623-208-22	SPRING WASHER,M3
704	7-623-210-22	SPRING WASHER,M4
705	7-683-410-04	SCREW,C3x20
706	7-683-422-04	SCREW,C4x14
707	7-686-448-01	SCREW,PS3x8
708	7-686-450-01	SCREW,PS3x12
709	7-686-527-01	SCREW,PSW3x6
710	7-686-625-04	SCREW,B3x8
711	7-688-003-11	WASHER,M3,MIDDL
712	7-688-004-11	WASHER,M4,MIDDL
714	7-686-623-04	SCREW,B3x5

	UPPER DRUM ASSY	LOWER DRUM ASSY	HEAD DRUM ASSY
NTSC,PM(02 model)	DMR-17-R	DML-17A-R	DMH-17A-R
NTSC(00 model)	DMR-19-R	DML-19A-R	DMH-19A-R
PS(02,04 model)	DMR-18-R	DML-17A-R	DMH-18A-R
PS(00 model)	DMR-20-R	DML-19A-R	DMH-20A-R
NTSC (12 model)	DMR-29-R	DML-17A-R	DMH-29A-R
NTSC (10 model)	DMR-31-R	DML-19A-R	DMH-31A-R
PS (12,14 model)	DMR-30-R	DML-17A-R	DMH-30A-R
PS (10 model)	DMR-32-R	DML-19A-R	DMH-32A-R

MOVABLE GUIDE ASSEMBLY (BVH-2000/2180/2500/2700)

No.	Part No.	Description
A01	A-6046-034-B	GUIDE ASSY,MOVABLE,TYPE A (for BVH-2000/PS/PM) (for BVH-2180/PS/PM) (for BVH-2500/P)
	A-6046-046-A	GUIDE ASSY,MOVABLE,TYPE HS (for BVH-2700)
A02	A-6046-037-C	GUIDE ASSY,S SLANT
A03	A-6046-035-A	GUIDE ASSY,T SLANT,TYPE A (for BVH-2000/PS/PM) (for BVH-2180/PS/PM) (for BVH-2500/P)
	A-6046-047-A	GUIDE ASSY,T SLANT,TYPE HS (for BVH-2700)
X01 ()	X-3673-619-0	DISK ASSY
X02	X-3673-620-0	HOLDER ASSY,S GUIDE
101	1-541-198-00	MOTOR,GEARED,DC12V EN35-H1G9B
102 ()	1-606-701-00	TH-03 BOARD
201	2-529-922-00	WASHER(B)
303	3-651-427-03	FLANGE,TAPE GUIDE
304	3-659-213-00	BEARING,BALL
305 ()	3-673-647-00	CAP A
309 ()	3-673-651-00	SHAFT,LEVER
310	3-673-725-02	GUIDE,TAPER
311	3-701-444-21	WASHER,M6,POLY
312	3-701-510-00	SET SCREW,4x4
315	3-701-505-00	SET SCREW,3x3
316 ()	3-680-324-00	SPRING
317 ()	3-680-325-00	FLANGE,HEIGHT ADJUSTMENT
318 ()	3-680-326-00	FLANGE(S)
319 ()	3-680-327-00	FLANGE (T)
320	3-680-328-02	GUIDE,T FIXED
321	3-513-234-00	SPRING,COMPRESSION
322	3-654-805-00	PIN(T),GUIDE
323	3-654-835-00	PIN(S),GUIDE
324	3-657-705-11	SCREW,C4x20
325	3-673-720-00	ROD,SLANT ADJUSTMENT
326	3-673-722-00	SCREW,ADJUSTMENT
327	3-674-683-00	SCREW,FITTING,FLANGE
328	3-680-321-00	FLANGE,GUIDE PIN
329	3-630-035-01	SPACER(t=0.01)
330	3-630-035-11	SPACER(t=0.02)
331 ()	3-680-362-01	FENCE
332	3-701-507-00	SETSCREW 3x5
701	7-621-912-38	SCREW,B2.6x6
702	7-623-208-22	SPRING WASHER,M3
703	7-624-106-04	STOP RING,E3
704	7-683-237-01	SET SCREW,3x3
705	7-683-406-04	SCREW,C3x12
706	7-686-447-01	SCREW,PS3x6
707	7-686-528-01	SCREW,PSW3x8
708 ()	7-686-553-01	SCREW,PSW4x20
709	7-688-003-01	WASHER,M3
710	7-621-259-42	SCREW,P2.6x6
711	7-621-259-62	SCREW,P2.6x10
712	7-621-732-08	SET SCREW,2x3
713	7-671-155-01	STEEL BALL 3.0
714	7-682-247-15	SCREW,K3x6
715	7-688-002-03	WASHER,M2.6,SMALL
716	7-688-004-03	WASHER,M4,SMALL
717	7-621-981-45	SCREW,PSW2.6x12
718	7-621-981-25	SCREW,PSW2.6x8

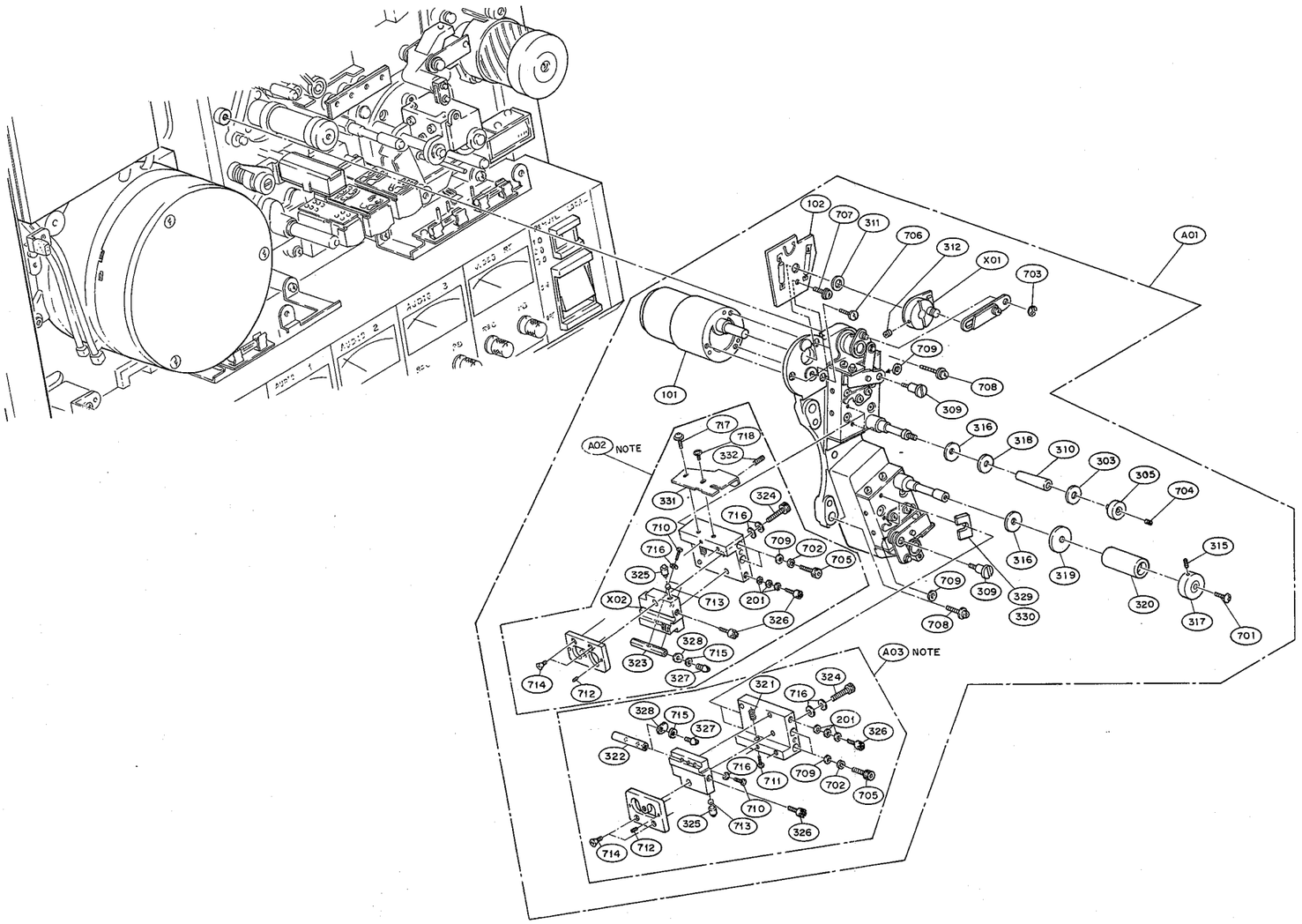

Note:
For replacement of the components of A02 and A03, contact your SONY Office.

MOVABLE GUIDE ASSEMBLY

BVH-2000/PS/PM
BVH-2180/PS/PM
BVH-2500/P
BVH-2700

CAPSTAN & MINI TENSION ARM

CAPSTAN & MINI TENSION ARM ASSEMBLY (BVH-2000/2500/2800)

No.		Part No.	Description
A01		A-6035-036-A	ROLLER ASSY
X01	()	X-3673-669-0	ARM ASSY, MINI TENSION (for BVH-2000/PS/PM 02, 04) (for BVH-2500) (for BVH-2800/PS)
X02	()	X-3673-671-1	PINCH LEVER (1) ASSY
X03	()	X-3673-672-2	PINCH LEVER (2) ASSY
X04	()	X-3673-628-2	LEVER (2) ASSY, JOINT
101		1-454-263-21	SOLENOID, 12V, 60 OHM (for BVH-2000/PS/PM 02, 04) (for BVH-2500/P) (for BVH-2800/PS)
102		1-454-305-00	SOLENOID, 12V 20/52 OHM
103	()	1-606-702-00	TD-05 BOARD (WITHOUT COMPONENT)
301		3-530-045-00	SPRING, COMPRESSION
302		3-534-217-00	SPRING, TENSION
303		3-534-236-00	SPRING, COMPRESSION
304		3-656-909-02	PINCH ROLLER
305		3-656-913-00	BEARING, BALL
306	()	3-673-652-00	SPRING, TENSION
307	()	3-673-656-00	SHAFT, LEVER
308	()	3-673-658-00	PIN (2), JOINT
309	()	3-673-659-00	SHAFT, PINCH ROLLER
310	()	3-673-738-00	ROD
311	()	3-673-748-00	PIN, JOINT
313	()	3-673-751-00	STOPPER
314	()	3-673-752-00	SHAFT, PRESS ADJUSTMENT
315	()	3-673-795-00	CUSHION
316	()	3-673-807-00	SHAFT, PINCH ROLLER
317	()	3-673-808-00	RETAINER, BEARING
318		3-701-445-21	WASHER, M7, POLY
319		3-701-505-00	SET SCREW, 3x3
320		3-701-445-11	WASHER, M7, POLY
321	()	3-680-322-00	SPRING, FRICTION
322	()	3-673-657-02	JOINT
323	()	3-673-747-01	JOINT (2)
401		4-820-917-01	SPRING, COMPRESSION
701		7-621-972-25	SCREW, PS2. 6x6
702		7-621-972-35	SCREW, PS2. 6x8
703		7-621-981-05	SCREW, PSW2. 6x5
704		7-623-208-22	SPRING WASHER, M3
705		7-623-210-22	SPRING WASHER, M4
706		7-623-508-01	LUG 3
707		7-624-105-04	STOP RING, E2. 3
708		7-624-106-04	STOP RING, E3
709		7-624-110-04	STOP RING, E6
710		7-624-193-08	STOP RING 3, GRIP
711		7-683-406-04	SCREW, C3x12
712		7-683-425-04	SCREW, C4x20
713		7-686-469-01	SCREW, PS4x10
714		7-686-527-01	SCREW, PSW3x6
715		7-686-528-01	SCREW, PSW3x8
716		7-688-003-03	WASHER, M3, SMALL
717		7-688-004-03	WASHER, M4, SMALL
718		7-688-004-11	WASHER, M4, MIDDLE
801		8-719-411-02	PHOTOINTERRUPTER CN1102S-SO
802		8-838-029-01	MOTOR, CAPSTAN, BHF-2300A

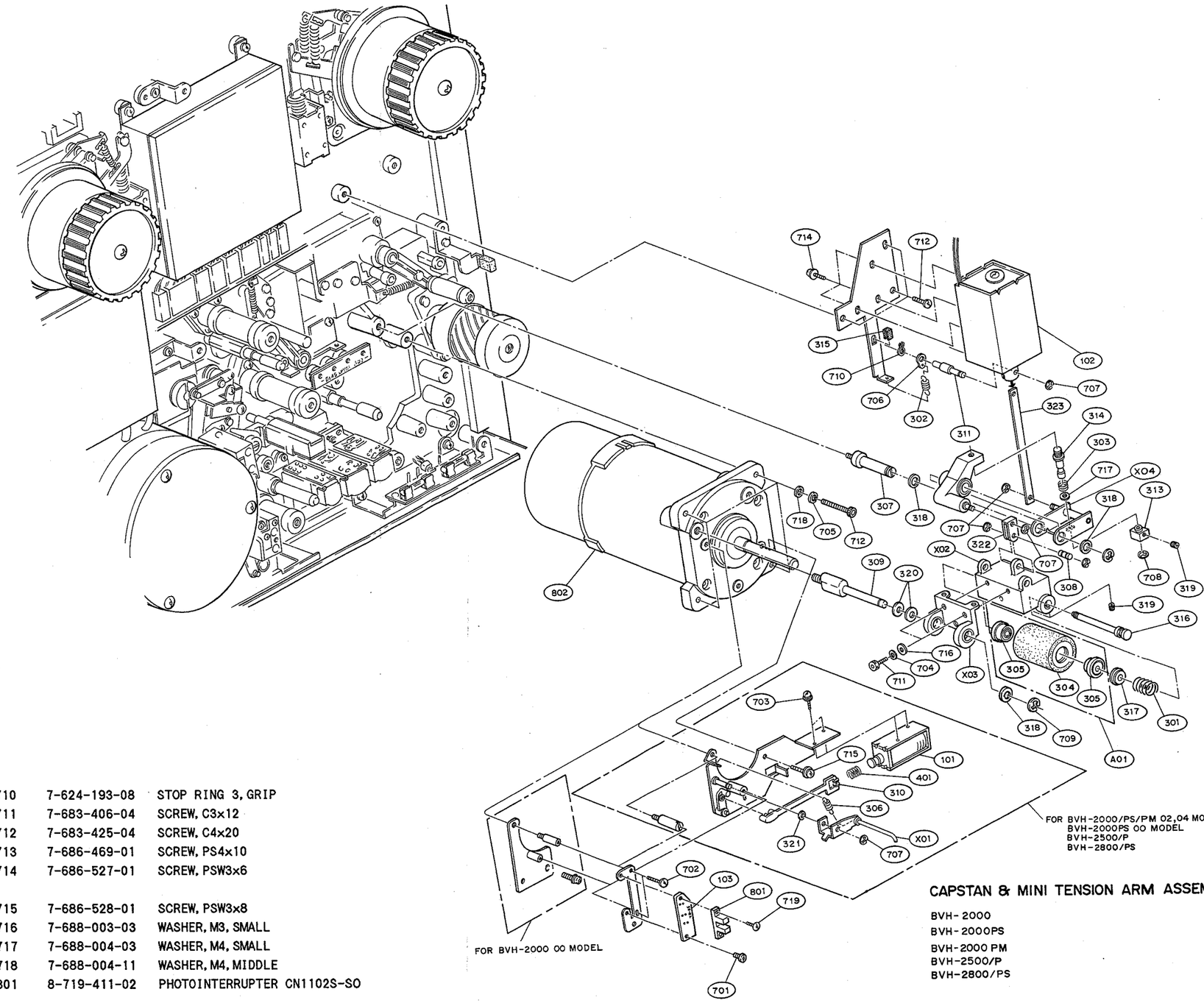

CAPSTAN & MINI TENSION ARM ASSEMBLY

BVH-2000
BVH-2000PS
BVH-2000 PM
BVH-2500/P
BVH-2800/PS

CAPSTAN & MINI TENSION ARM

BVH-2180

CAPSTAN & MINI TENSION ARM ASSEMBLY (BVH-2180/2830)

No.		Part No.	Description
A01		A-6035-036-A	ROLLER ASSY
X01	()	X-3673-669-0	ARM ASSY, MINI TENSION
X02	()	X-3673-671-1	PINCH LEVER (1) ASSY
X03	()	X-3673-672-2	PINCH LEVER (2) ASSY
X04	()	X-3673-628-2	LEVER (2) ASSY, JOINT
101		1-454-263-21	SOLENOID, 12V, 60 OHM
102		1-454-305-00	SOLENOID, 12V 20/52 OHM
103	()	1-606-702-00	TD-05 BOARD (WITHOUT COMPONENT)
301		3-530-045-00	SPRING, COMPRESSION
302		3-534-217-00	SPRING, TENSION
303		3-534-236-00	SPRING, COMPRESSION
304		3-656-909-02	PINCH ROLLER
305		3-656-913-00	BEARING, BALL
306	()	3-673-652-00	SPRING, TENSION
307	()	3-673-656-00	SHAFT, LEVER
308	()	3-673-658-00	PIN (2), JOINT
309	()	3-673-659-00	SHAFT, PINCH ROLLER
310	()	3-673-738-00	ROD
311	()	3-673-748-00	PIN, JOINT
313	()	3-673-751-00	STOPPER
314	()	3-673-752-00	SHAFT, PRESS ADJUSTMENT
315	()	3-673-795-00	CUSHION
316	()	3-673-807-00	SHAFT, PINCH ROLLER
317	()	3-673-808-00	RETAINER, BEARING
318		3-701-445-21	WASHER, M7, POLY
319		3-701-505-00	SET SCREW, 3x3
320		3-701-445-11	WASHER, M7, POLY
321	()	3-680-322-00	SPRING, FRICTION
322	()	3-673-657-02	JOINT
323	()	3-673-747-01	JOINT (2)
401		4-820-917-01	SPRING, COMPRESSION
701		7-621-972-25	SCREW, PS2.6x6
702		7-621-972-35	SCREW, PS2.6x8
703		7-621-981-05	SCREW, PSW2.6x5
704		7-623-208-22	SPRING WASHER, M3
705		7-623-210-22	SPRING WASHER, M4
706		7-623-508-01	LUG 3
707		7-624-105-04	STOP RING, E2.3
708		7-624-106-04	STOP RING, E3
709		7-624-110-04	STOP RING, E6
710		7-624-193-08	STOP RING 3, GRIP
711		7-683-406-04	SCREW, C3x12
712		7-683-425-04	SCREW, C4x20
713		7-686-469-01	SCREW, PS4x10
714		7-686-527-01	SCREW, PSW3x6
715		7-686-528-01	SCREW, PSW3x8
716		7-688-003-03	WASHER, M3, SMALL
717		7-688-004-03	WASHER, M4, SMALL
718		7-688-004-11	WASHER, M4, MIDDLE
801		8-719-411-02	PHOTOINTERRUPTER CN1102S-SO
802		8-838-029-01	MOTOR, CAPSTAN, BHF-2300A

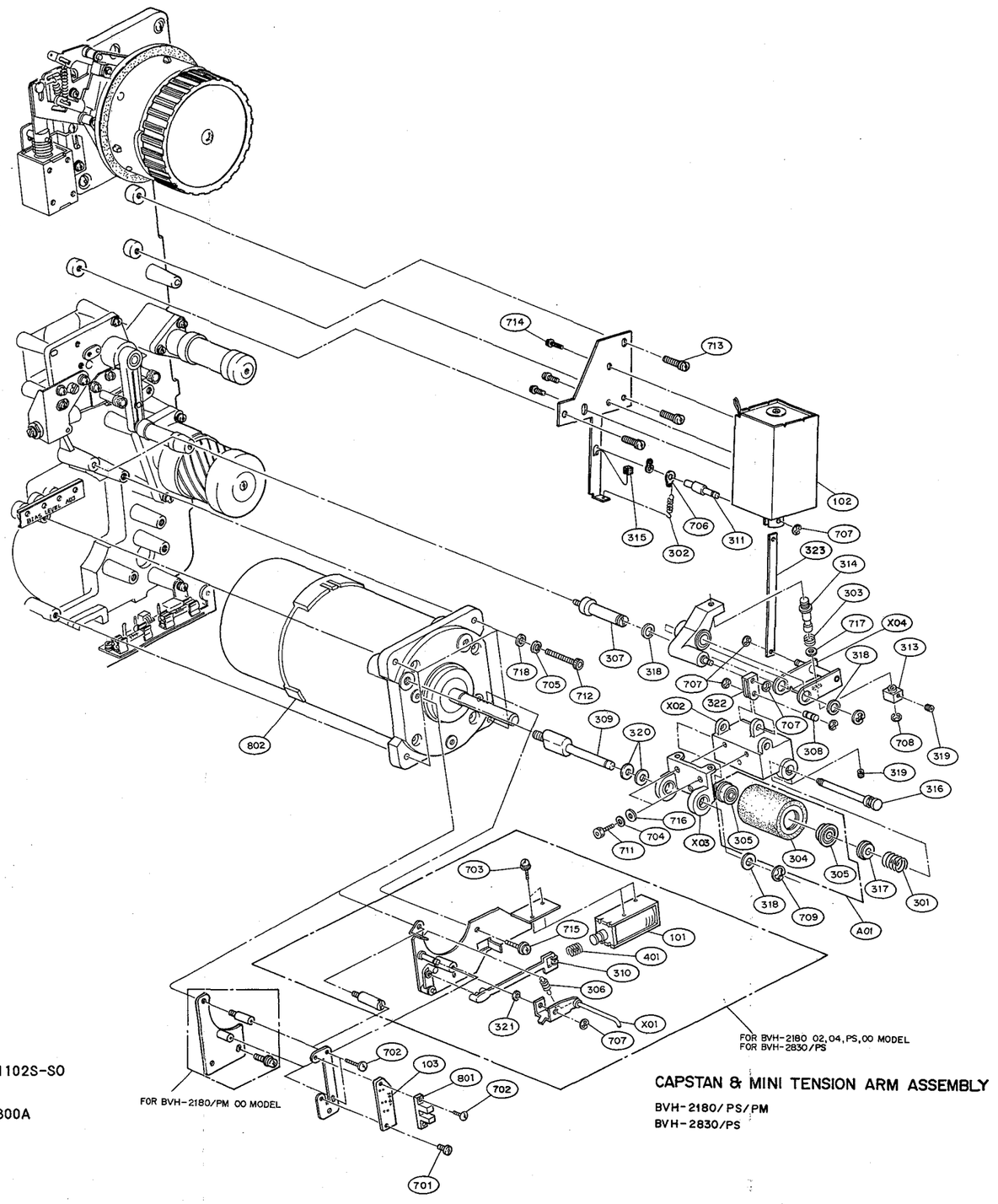

CAPSTAN & MINI TENSION ARM ASSEMBLY

BVH-2180/PS/PM
BVH-2830/PS

STATIONARY HEADS ASSEMBLY (BVH-2000/2180/2500)

No.	Part No.	Description
A01 ()	A-6036-052-A	SHIELD ASSY,FRONT (for 02,04 model)
A02 ()	A-6036-059-A	SHIELD ASSY,FRONT (for 00 model)
A03	A-6046-027-E	SHAFT ASSY,IP
X01 ()	X-3673-611-0	PLATE ASSY,SHIELD
101 ()	1-588-946-00	CEH-2 BOARD
102 ()	1-606-679-00	HD-06 BOARD
103 ()	1-606-680-00	HD-07 BOARD,for 00,02 model
104 ()	1-606-681-00	HD-08 BOARD,for PS 04
301	3-650-523-00	SPRING,COMPRESSION
302	3-651-419-01	SPACER (B),ERASE HEAD
303	3-651-419-21	SPACER (B),ERASE HEAD
304	3-651-427-00	FLANGE,TAPE GUIDE
305	3-651-428-00	GUIDE,TAPE
306	3-653-350-00	SPRING,COMPRESSION
308 ()	3-661-588-00	SPACER
310 ()	3-673-647-00	CAP A
311 ()	3-673-669-02	SHAFT,FIXED GUIDE
312	3-673-674-00	WIRE
313 ()	3-673-696-01	ROD,LOCK
314 ()	3-673-696-11	ROD,LOCK
315 ()	3-673-906-00	SET SCREW,4x10,CONE POINT
316	3-673-907-00	SET SCREW,3x6,CONE POINT
317	3-674-665-00	GUIDE,DUMMY (for 00 model)
318 ()	3-680-363-01	CAP,IP SHAFT
319 ()	3-674-689-00	SPRING,COMPRESSION
320 ()	3-674-690-00	SHIM
321 ()	3-674-692-00	COVER,SHIELD,HEAD,R/P
322 ()	3-674-693-00	INSULATOR
323	3-659-213-00	BEARING,BALL
324 ()	3-673-791-02	SPRING,TORSION
325	3-673-686-00	PLATE, FRICTION
401	4-812-546-01	SPRING,COMPRESSION,(B)
402	4-828-624-01	WASHER,DIA.16
701	7-621-911-08	SCREW,B2x3
702	7-621-972-25	SCREW,PS2.6x6
703	7-621-972-45	SCREW,PS2.6x10
704	7-621-981-15	SCREW,PSW2.6x6
705	7-623-205-22	SPRING WASHER,M2
706	7-623-208-22	SPRING WASHER,M3
707	7-623-210-22	SPRING WASHER,M4
708	7-624-105-04	STOP RING,E2.3
709	7-624-106-04	STOP RING,E3
710	7-624-108-04	STOP RING,E4
711	7-683-237-01	SET SCREW,3x3,FLAT POINT
713	7-683-405-04	SCREW,C3x10
714	7-683-407-04	SCREW,C3x14
715	7-683-408-04	SCREW,C3x16
716	7-683-425-04	SCREW,C4x20
717	7-686-446-01	SCREW,PS3x5
718	7-686-447-01	SCREW,PS3x6
719	7-686-448-01	SCREW,PS3x8
720	7-686-469-01	SCREW,PS4x10
721	7-686-527-01	SCREW,PSW3x6
722	7-686-548-01	SCREW,PSW4x8
723	7-688-004-11	WASHER,M4,MIDDLE
725	7-624-193-01	STOP RING 4,GRIP
726	7-686-623-04	SCREW,B3x5
727	7-688-003-01	WASHER,M3,SMALL
801	8-825-725-10	HEAD,VIDEO/SYNC ERASE, EF204-5102
802	8-825-725-50	HEAD,AUDIO ERASE,EF204-5104B (for 00,02 model)
803	8-825-737-10	HEAD,AUDIO R/P,PA77-5104C (for 00,02 model)
804	8-825-737-20	HEAD,AUDIO MONITOR, PA77-5104D (for 02 model)
805	8-825-725-70	HEAD,AUDIO ERASE,EF204-5105A (for PS 04)
806	8-825-737-61	HEAD,AUDIO R/P,PA77-5105B (for PS 04)
807	8-825-737-71	HEAD,AUDIO MONITOR,PA77-5105C (for PS 04)

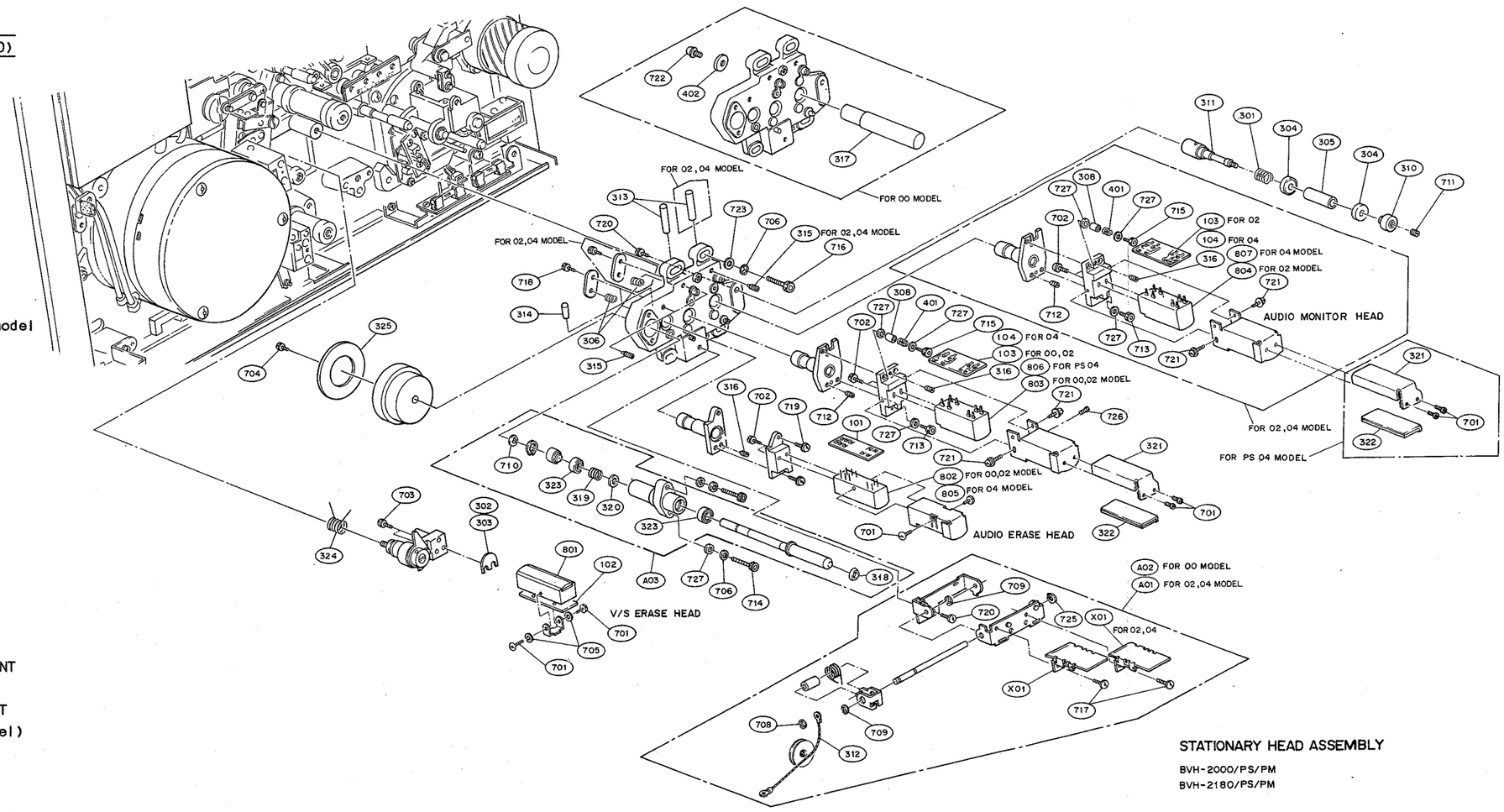

STATIONARY HEAD ASSEMBLY

BVH-2000/PS/PM
BVH-2180/PS/PM

Note: BVH-2500 series has only 02 model.

PC BOARDS & PANEL BRACKETS ON FRONT (BVH-2000)

No.	Part No.	Description
A01	() A-6011-063-A	COMPLETE PCB,RP-09
A02	() A-6013-067-A	COMPLETE PCB,AP-12 (for NTSC,PM)
A03	() A-6013-046-A	COMPLETE PCB,BE-03 (for 00,02 model)
A04	() A-6025-084-A	COMPLETE PCB,TT-01
A05	() A-6013-068-A	COMPLETE PCB,AP-12 (for PS 00/02)
A06	() A-6013-069-A	COMPLETE PCB,AP-12 (for PS 04)
A07	() A-6013-054-A	COMPLETE PCB,BE-03 (for PS 04)
101	() 1-606-676-00	BE-04 BOARD (WITHOUT COMPONENT)
102	() 1-606-699-00	HM-05 BOARD (WITHOUT COMPONENT)
103	() 1-609-959-00	TM-16 BOARD (WITHOUT COMPONENT)
301	() 3-673-677-00	BRACKET(1),PANEL
302	() 3-673-678-00	BRACKET(2),PANEL
303	() 3-673-679-01	BRACKET(3),PANEL
304	() 3-673-679-11	BRACKET(3),PANEL
307	() 3-673-784-00	CAP
308	() 3-673-785-00	BRACKET(4),PANEL
309	() 3-673-865-00	LEVER
310	() 3-673-867-00	PLATE,INDICATION,PC BOARD
311	() 3-674-611-00	LABEL,AU-27
311	() 3-674-612-00	LABEL,AE-03 (for 00,02 model)
311	() 3-674-613-00	LABEL,EQ-02 (for NTSC,PS,PM 00,02,04)
311	() 3-674-614-00	LABEL,DM-25
311	() 3-674-615-00	LABEL,MD-14 (for NTSC,PS,PM 00,02,04)
311	() 3-674-616-11	LABEL,LG-02(A) (for NTSC 00,02)
311	() 3-674-617-00	LABEL,SY-79 (for 02,04 model)
311	() 3-674-618-00	LABEL,SY-80 (for NTSC,PM)
311	() 3-674-619-00	LABEL,SV-43
311	() 3-674-620-00	LABEL,RL-12
311	() 3-674-621-00	LABEL,CD-17 (for NTSC 00,02)
311	() 3-674-622-00	LABEL,SR-15 (for NTSC)
311	() 3-674-623-00	LABEL,DT-04 (for NTSC,PM)
311	() 3-674-624-00	LABEL,SY-80 (for PS)
311	() 3-674-625-03	LABEL,DT-05 (for PS)
311	() 3-674-626-00	LABEL,SR-15 (for PS,PM)
311	() 3-674-627-11	LABEL,LG-02(A) (for NTSC,PS,PM 00,02,04)
311	() 3-674-628-00	LABEL,CD-17 (for PS,PM 00,02,04)
311	() 3-674-657-00	LABEL,AE-03 (for PS 04)
311	() 3-674-684-00	LABEL,SY-79 (for 00 model)
311	() 3-693-052-01	LABEL(PS-NS) LG-02 (for PS 10,12,14)
311	() 3-693-053-01	LABEL(PS-NS) CD-17 (for PS 10,12,14)
311	() 3-693-055-01	LABEL(NS) MD-14 (for 10,12,14)
311	() 3-693-056-01	LABEL(NS) EQ-02 (for 10,12,14)
311	() 3-693-057-01	LABEL(NS) LG-02 (for U/C 10,12)
311	() 3-693-058-01	LABEL(NS) CD-17 (for U/C 10,12)

PC BOARD & PANEL BRACKET

PC BOARD & PANEL BRACKET

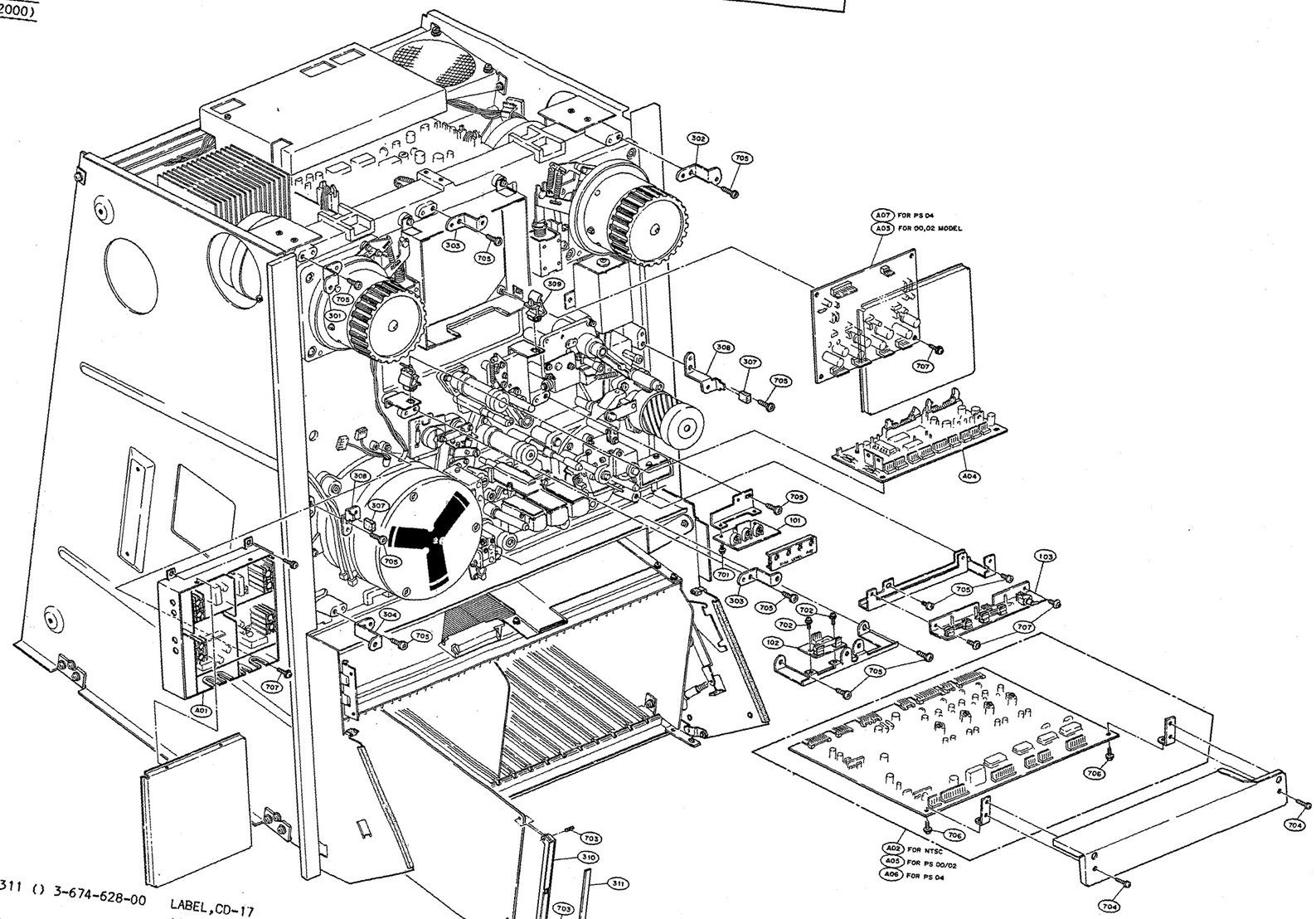

312	() 3-703-141-00	HOLDER,PCB
701	7-621-981-05	SCREW,PSW2.6x5
702	7-621-981-15	SCREW,PSW2.6x6
703	() 7-626-317-21	SPRING PIN 2.5x8
704	7-686-447-01	SCREW,PS3x6
705	7-686-469-01	SCREW,PS4x10
706	7-686-527-01	SCREW,PSW3x6
707	7-686-528-01	SCREW,PSW3x8

PC BOARD & PANEL BRACKETS ON FRONT
BVH-2000
BVH-2000PS
BVH-2000PM

BVH-2180

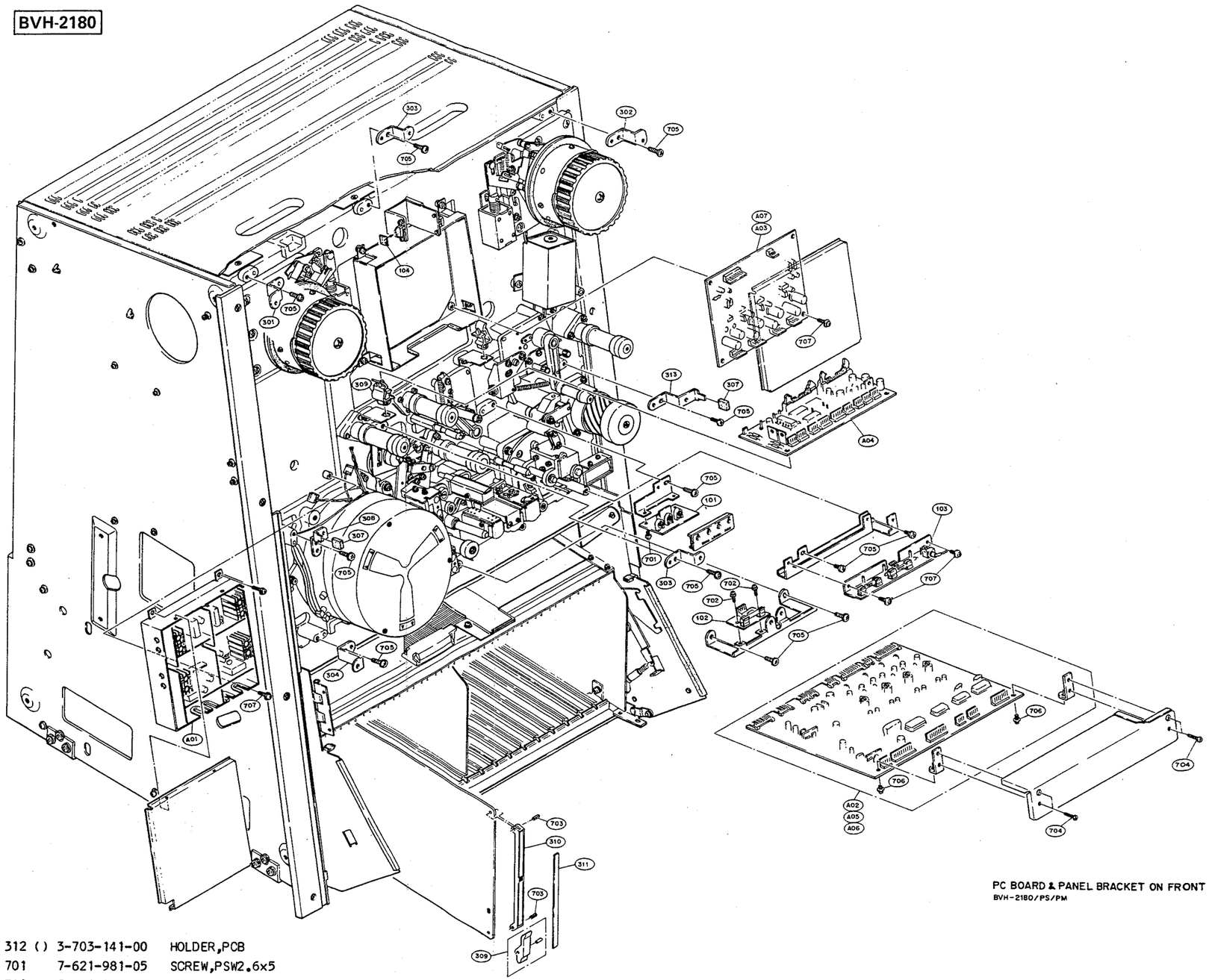

PC BOARD & PANEL BRACKET ON FRONT
BVH-2180/PS/PM

PC BOARDS & PANEL BRACKETS ON FRONT (BVH-2180)

No.	Part No.	Description
A01 ()	A-6011-063-A	COMPLETE PCB,RP-09
A02 ()	A-6013-067-A	COMPLETE PCB,AP-12 (for NTSC,PM)
A03 ()	A-6013-046-A	COMPLETE PCB,BE-03 (for 00,02 model)
A04 ()	A-6025-091-A	COMPLETE PCB,TT-01
A05 ()	A-6013-068-A	COMPLETE PCB,AP-12 (for PS 00/02)
A06 ()	A-6013-069-A	COMPLETE PCB,AP-12 (for PS 04)
A07 ()	A-6013-054-A	COMPLETE PCB,BE-03 (for PS 04)
101 ()	1-606-676-00	BE-04 BOARD (WITHOUT COMPONENT)
102 ()	1-606-699-00	HM-05 BOARD (WITHOUT COMPONENT)
103 ()	1-609-959-12	TM-16 BOARD (WITHOUT COMPONENT)
104 ()	1-613-389-11	RS-18 BOARD (WITHOUT COMPONENT)
301 ()	3-673-677-00	BRACKET(1),PANEL
302 ()	3-673-678-00	BRACKET(2),PANEL
303 ()	3-673-679-01	BRACKET(3),PANEL
304 ()	3-673-679-11	BRACKET(3),PANEL
307 ()	3-673-784-00	CAP
308 ()	3-673-785-00	BRACKET(4),PANEL
309 ()	3-673-865-00	LEVER
310 ()	3-673-867-00	PLATE,INDICATION,PC BOARD
311 ()	3-674-611-00	LABEL,AU-27
311 ()	3-674-612-00	LABEL,AE-03 (for 00,02 model)
311 ()	3-674-613-00	LABEL,EQ-02
311 ()	3-674-614-00	LABEL,DM-25
311 ()	3-674-615-00	LABEL,MD-14
311 ()	3-674-616-11	LABEL,LG-02(A)
311 ()	3-674-617-00	LABEL,SY-79 (for 02,04 model)
311 ()	3-674-618-00	LABEL,SY-80 (for NTSC,PM)
311 ()	3-690-530-01	LABEL,SV-43
311 ()	3-690-531-01	LABEL,RL-12
311 ()	3-674-621-00	LABEL,CD-17 (for NTSC)
311 ()	3-674-622-00	LABEL,SR-15 (for NTSC)
311 ()	3-674-623-00	LABEL,DT-04 (for NTSC,PM)
311 ()	3-674-624-00	LABEL,SY-80 (for PS)
311 ()	3-674-625-03	LABEL,DT-05 (for PS)
311 ()	3-674-626-00	LABEL,SR-15 (for PS,PM)
311 ()	3-674-627-11	LABEL,LG-02(A)
311 ()	3-674-628-00	LABEL,CD-17 (for PS,PM)
311 ()	3-674-657-00	LABEL,AE-03 (for PS 04)
311 ()	3-674-684-00	LABEL,SY-79 (for 00 model)
312 ()	3-703-141-00	HOLDER,PCB
701	7-621-981-05	SCREW,PSW2.6x5
702	7-621-981-15	SCREW,PSW2.6x6
703 ()	7-626-317-21	SPRING PIN 2.5x8
704	7-686-447-01	SCREW,PS3x6
705	7-686-469-01	SCREW,PS4x10
706	7-686-527-01	SCREW,PSW3x6
707	7-686-528-01	SCREW,PSW3x8

TAPE TRANSPORT REAR ASSY

TAPE TRANSPORT REAR ASSEMBLY (BVH-2000/2180/2500)

No.	Part No.	Description
A01 ()	A-6013-045-B	COMPLETE PCB,BE-02 (for BVH-2000/2180/PS/PM) 00,02 model) (for BVH-2500/P)
A02 ()	A-6015-064-A	COMPLETE PCB,CA-09
A03 ()	A-6015-065-A	COMPLETE PCB,DA-07
A04 ()	A-6023-030-A	COMPLETE PCB,PS-14
A05 ()	A-6023-031-A	COMPLETE PCB,RA-05
A06	A-6023-032-A	COMPLETE PCB,DD-01 (for BVH-2500)
	A-6023-035-A	COMPLETE PCB,DD-03 (for BVH-2000/PS/PM) (for BVH-2180/PS/PM)
A07 ()	A-6037-022-A	MOTOR ASSY,IP DRIVING
A08 ()	A-6037-025-A	MOTOR ASSY,ROLLER
A09 ()	A-6013-053-B	COMPLETE PCB,BE-02 (for BVH-2000PS 04 model) (for BVH-2180PS 04 model)
A10 ()	A-6025-093-A	COMPLETE PCB,RS-17 (for BVH-2180/PS/PM)
101	1-541-170-21	FAN,DC12V,FB-08B12HA
201 ()	2-252-609-00	COVER,FAN
301 ()	3-534-255-00	CUSHION,BRAKE
302 ()	3-630-837-00	BUSHING
303 ()	3-642-310-00	HOLDER,CIRCUIT BOARD
304 ()	3-680-316-00	NUT,M4,NYLON
305 ()	3-651-849-00	SPACER,PANEL
306 ()	3-673-676-11	RAIL,PC BOARD GUIDE
307 ()	3-673-676-21	RAIL,PC BOARD GUIDE
308 ()	3-703-141-00	HOLDER,CIRCUIT BOARD
309 ()	3-703-072-00	HOLDER,CIRCUIT BOARD
401 ()	3-303-890-01	SPRING,COMPRESSION
701	7-621-559-00	SCREW,K2.6×4
702	7-682-571-09	SCREW,+B4×45
703	7-683-238-01	SET SCREW 3×4,FLAT POINT
704	7-686-469-01	SCREW,PS4×10
705	7-686-527-01	SCREW,PSW3×6
706	7-686-528-01	SCREW,PSW3×8
707	7-686-548-01	SCREW,PSW4×8
708	7-686-625-04	SCREW,B3×8
709	7-686-640-09	SCREW,B4×20
710	7-688-004-12	WASHER,M4,MIDDLE
711	7-688-005-02	WASHER,M5,SMALL

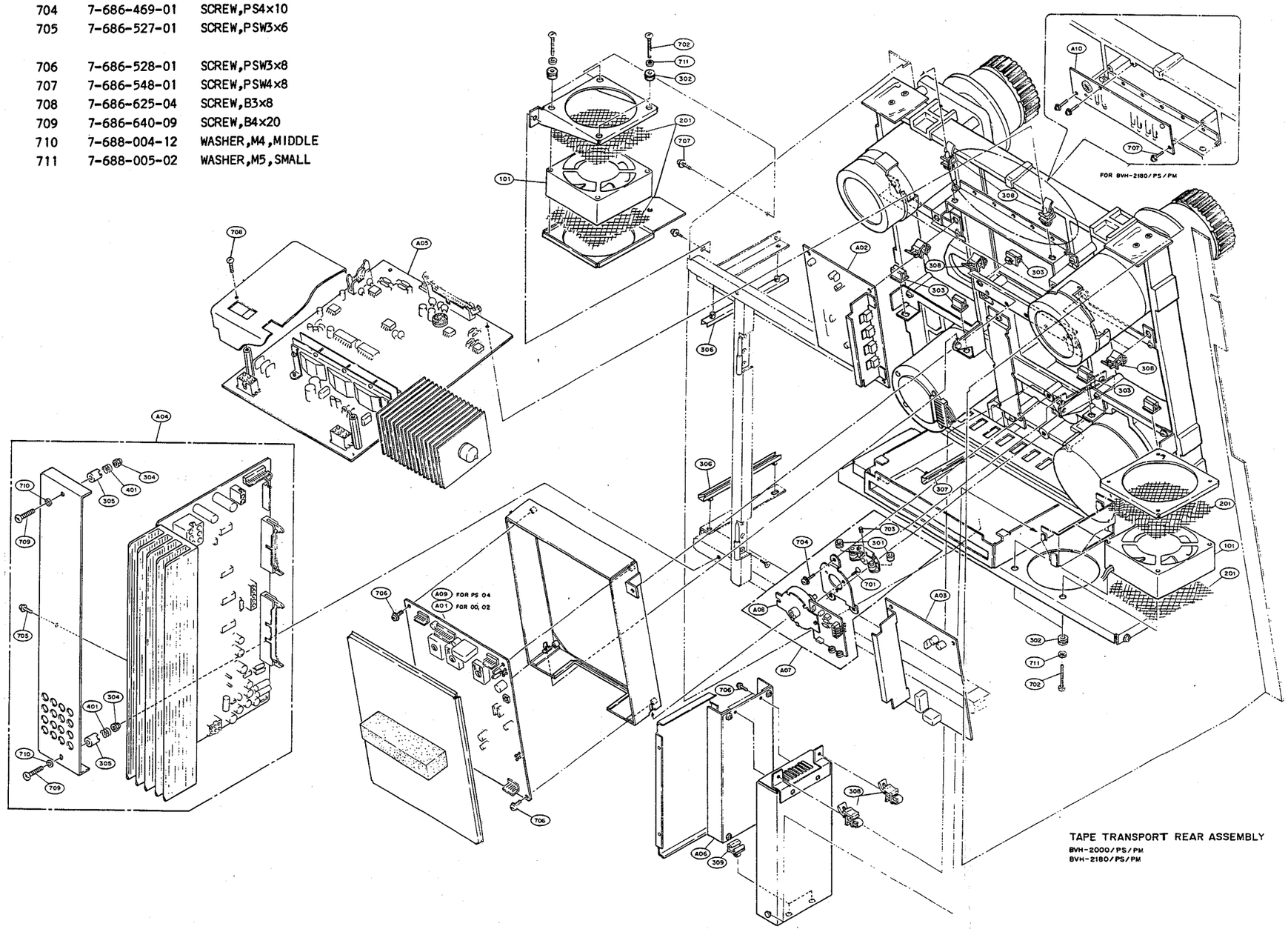

TAPE TRANSPORT REAR ASSEMBLY
BVH-2000/PS/PM
BVH-2180/PS/PM

Ref.No. or Q'ty	Part No.	Description
AU-27 BOARD (BVH-2000PS,2180PS/CARD RACK)		
1pc	() A-6013-050-A	COMPLETE PCB,AU-27
(This assembly includes the following parts.)		
C102,109,202,209	1-107-085-00	CAP,MICA 100PF 5% 50V
C180,280	1-107-210-00	CAP,MICA 22PF 5% 500V
C161	1-109-540-00	CAP,MICA 180PF 5% 100V
C267	1-109-541-00	CAP,MICA 200PF 5% 100V
C261,262	1-109-542-00	CAP,MICA 220PF 5% 100V
C167	1-109-543-00	CAP,MICA 240PF 5% 100V
C162	1-109-547-00	CAP,MICA 330PF 5% 100V
C163,263	1-109-549-00	CAP,MICA 390PF 5% 100V
C101,120,201,220	1-109-550-00	CAP,MICA 430PF 5% 100V
C104,105,114,115,133, 134,139,140,146,147, 148,156,157,165,166, 204,205,214,215,233, 234,239,240,246,247, 248,256,257,265,266	1-123-318-00	CAP,ELECT 33 16V
C141,149,150,241,249, 250	1-123-332-00	CAP,ELECT 47 25V
C143,145,243,245	1-123-333-00	CAP,ELECT 100 25V
C171,172,173,174,175, 176,177,271,272,273, 274,275,276,277	1-123-356-00	CAP,ELECT 10 50V
C108,208	1-130-467-00	CAP,MYLAR 470PF 5% 50V
C119,137,151,219,237, 251	1-130-470-00	CAP,MYLAR 820PF 5% 50V
C136,236	1-130-473-00	CAP,MYLAR 0.0015 5% 50V
C116,216	1-130-474-00	CAP,MYLAR 0.0018 5% 50V

Ref.No. or Q'ty	Part No.	Description
(AU-27 BOARD,CARD RACK)		
C113,129,132,213,229, 232	1-130-475-00	CAP,MYLAR 0.0022 5% 50V
C152,252 (May be used or not.)	1-130-475-00	CAP,MYLAR 0.0022 5% 50V
C154,179,254,279	1-130-477-00	CAP,MYLAR 0.0033 5% 50V
C112,212	1-130-481-00	CAP,MYLAR 0.0068 5% 50V
C168,268	1-130-482-00	CAP,MYLAR 0.0082 5% 50V
C159,259	1-130-620-00	CAP,FILM 0.01 5% 50V
C110,111,130,131,210, 211,230,231	1-130-624-00	CAP,FILM 0.022 5% 50V
C169,269	1-130-632-00	CAP,FILM 0.1 5% 50V
C117,135,217,235	1-131-347-00	CAP,TANT 0.1 10% 35V
C160,260	1-131-369-00	CAP,TANT 4.7 10% 16V
C118,153,170,218,253, 270	1-131-371-00	CAP,TANT 10 10% 16V
C178,278	1-131-373-00	CAP,TANT 22 10% 16V
C103,203	1-131-381-00	CAP,TANT 47 10% 10V
C142,144,242,244	1-161-051-00	CAP,CERAMIC 0.01 10% 50V
RV111,211	1-224-937-00	RES,VAR,METAL 1K
RV101,102,104,107,110, 201,202,204,207,210	1-224-940-00	RES,VAR,METAL 10K
RV103,105,106,203,205, 206	1-224-941-00	RES,VAR,METAL 20K
RV108,109,208,209	1-228-580-00	RES,VAR,COMP 20K(B)

Ref.No. or Q'ty	Part No.	Description
(AU-27 BOARD,CARD RACK)		
R102,170,202,270	1-247-767-00	RES,CARBON 2.2 5% 1/6W
R105,106,115,116,119, 125,135,136,141,142, 149,154,160,168,169, 172,182,183,194,205, 206,215,216,219,225, 235,236,241,242,249, 254,260,268,269,272, 282,283,294,331	1-247-807-00	RES,CARBON 100 5% 1/6W
R139,239	1-247-815-00	RES,CARBON 220 5% 1/6W
R188,288	1-247-821-00	RES,CARBON 390 5% 1/6W
R104,204	1-247-828-00	RES,CARBON 750 5% 1/6W
R114,134,147,148,199, 214,234,247,248,299	1-247-831-00	RES,CARBON 1K 5% 1/6W
R118,178,218,278	1-247-835-00	RES,CARBON 1.5K 5% 1/6W
R110,210	1-247-836-00	RES,CARBON 1.6K 5% 1/6W
R101,111,121,130,138, 201,211,221,230,238	1-247-839-00	RES,CARBON 2.2K 5% 1/6W
R145,165,245,265	1-247-845-00	RES,CARBON 3.9K 5% 1/6W
R167,267	1-247-846-00	RES,CARBON 4.3K 5% 1/6W
R117,120,137,140,161, 217,220,237,240,261	1-247-847-00	RES,CARBON 4.7K 5% 1/6W
R150,151,250,251	1-247-851-00	RES,CARBON 6.8K 5% 1/6W
R157,162,257,262	1-247-853-00	RES,CARBON 8.2K 5% 1/6W

Ref.No. or Q'ty	Part No.	Description
(AU-27 BOARD,CARD RACK)		
R124,156,158,187,190, 191,192,193,195,196, 224,256,258,287,290, 291,293,311,312,313, 314,315,316,317,321, 322,323,324,325,326, 327	1-247-855-00	RES,CARBON 10K 5% 1/6W
R198,298	1-247-857-00	RES,CARBON 12K 5% 1/6W
R171,271	1-247-860-00	RES,CARBON 16K 5% 1/6W
R107,164,207,264	1-247-861-00	RES,CARBON 18K 5% 1/6W
R175,181,275,281	1-247-863-00	RES,CARBON 22K 5% 1/6W
R108,208	1-247-864-00	RES,CARBON 24K 5% 1/6W
R174,274	1-247-867-00	RES,CARBON 33K 5% 1/6W
R197,297	1-247-870-00	RES,CARBON 43K 5% 1/6W
R122,222	1-247-871-00	RES,CARBON 47K 5% 1/6W
R144,244	1-247-877-00	RES,CARBON 82K 5% 1/6W
R123,146,180,185,189, 223,246,280,285,289	1-247-879-00	RES,CARBON 100K 5% 1/6W
R284	1-247-881-00	RES,CARBON 120K 5% 1/6W
R112,131,212,231	1-247-882-00	RES,CARBON 130K 5% 1/6W
R163,263	1-247-883-00	RES,CARBON 150K 5% 1/6W
R184,186,286	1-247-887-00	RES,CARBON 220K 5% 1/6W
R113,133,213,233	1-247-890-00	RES,CARBON 300K 5% 1/6W
R176,276	1-247-895-00	RES,CARBON 470K 5% 1/6W
R155,255	1-247-899-00	RES,CARBON 680K 5% 1/6W
R152,153,252,253	1-247-903-00	RES,CARBON 1M 5% 1/6W

Ref.No. or Q'ty	Part No.	Description
(AU-27 BOARD,CARD RACK)		
LV102,202	1-407-293-00	INDUCTOR,VAR,1.5mH
LV101,201	1-407-297-00	INDUCTOR,VAR,3.5mH
L102,202	1-407-494-00	INDUCTOR,MICRO,1.5mH 5%
TH101,201	1-800-200-00	THERMISTOR,S-3K
TPE101,106,107,108,109, 201,206,207,208,209	() 3-673-772-01	TERMINAL,TP
TP101,102,103,104,105, 106,107,108,109,201, 202,203,204,205,206, 207,208,209	() 3-673-772-41	TERMINAL,TP
1pc	() 3-673-865-00	LEVER,WITH PIN
1pc	() 3-673-867-00	PLATE,INDICATION, PC BOARD
1pc	() 3-674-611-00	LABEL(AU-27),PC BOARD
1pc	7-621-981-15	SCREW,PSW 2.6x6
2pcs	() 7-626-317-21	PIN,SPRING 2.5x8
D101,102,201,202	8-719-815-80	DIODE 1S1587
D1	8-719-911-06	DIODE 1SS106
Q102,202	8-729-373-92	TRANSISTOR 2SB739
Q101,201	8-729-378-84	TRANSISTOR 2SD788
IC106,206	8-759-178-05	IC UPC78L05
IC101,201	8-759-302-65	IC HA12017
IC102,104,105,108,109, 202,204,205,208,209	8-759-745-59	IC NJM4559D

Ref.No. or Q'ty	Part No.	Description
(AU-27 BOARD,CARD RACK)		
IC107,207	8-759-745-60	IC NJM4560D
IC113,213	8-759-900-00	IC SN74LS00N,TTL
IC1,110,111,112,210,211, 212	8-759-921-91	IC TL191CN

AE-03 BOARD (BVH-2000PS-00,02,10,12/2180PS-00,02)

1pc (for 00/02/10/12 model)		
	() A-6013-051-B	COMPLETE PCB,AE-03
(This assembly includes the following parts.)		
1pc	() X-3673-641-0	PLATE ASSY,SHIELD
C185,186	1-102-106-00	CAP,CERAMIC 100PF 10% 50V
C202	1-107-075-00	CAP,MICA 39PF 5% 50V
C148	1-107-077-00	CAP,MICA 47PF 5% 50V
C150	1-107-081-00	CAP,MICA 68PF 5% 50V
C203	1-107-158-00	CAP,MICA 30PF 5% 500V
C4,15	1-107-210-00	CAP,MICA 22PF 5% 500V
C12	1-109-546-00	CAP,MICA 300PF 5% 100V
C153	1-109-547-00	CAP,MICA 330PF 5% 100V
C2	1-109-550-00	CAP,MICA 430PF 5% 100V
C147	1-109-554-00	CAP,MICA 510PF 5% 100V
C3,5,9,11,19,20,25,26, 27,28,35,36,48,49,61, 63,70,71,73,74,141	1-123-332-00	CAP,ELECT 47 25V

Ref.No. or Q'ty	Part No.	Description
(AE-03 BOARD,2000PS-00,02,10,12/ 2180PS-00,02,CARD RACK)		
C23,24,41,42,200,201	1-123-333-00	CAP,ELECT 100 25V
C16,17,21,22,56,57,62, 67,68,77,80,81,181,182	1-123-356-00	CAP,ELECT 10 50V
C33	1-130-467-00	CAP,MYLAR 470PF 5% 50V
C149	1-130-468-00	CAP,MYLAR 560PF 5% 50V
C44	1-130-470-00	CAP,MYLAR 820PF 5% 50V
C32	1-130-472-00	CAP,MYLAR 0.0012 5% 50V
C8	1-130-473-00	CAP,MYLAR 0.0015 5% 50V
C10,146	1-130-474-00	CAP,MYLAR 0.0018 5% 50V
C38,46,65	1-130-475-00	CAP,MYLAR 0.0022 5% 50V
C14	1-130-476-00	CAP,MYLAR 0.0027 5% 50V
C45,69,76	1-130-477-00	CAP,MYLAR 0.0033 5% 50V
C154	1-130-480-00	CAP,MYLAR 0.0056 5% 50V
C64,151	1-130-481-00	CAP,MYLAR 0.0068 5% 50V
C51	1-130-620-00	CAP,FILM 0.01 5% 50V
C37,39	1-130-624-00	CAP,FILM 0.022 5% 50V
C184	1-131-295-61	CAP,TANT 100 10% 6.3V
C13,34,66	1-131-345-00	CAP,TANT 0.47 10% 35V
C29	1-131-347-00	CAP,TANT 1 10% 35V
C31	1-131-349-00	CAP,TANT 2.2 10% 35V
C6,18,52,75,145,189,190	1-131-351-00	CAP,TANT 4.7 10% 35V
C72	1-131-381-00	CAP,TANT 47 10% 10V
C7,55,140	1-136-156-00	CAP,FILM 0.018 5% 50V
C1,54,79,83,84	1-161-055-00	CAP,CERAMIC 0.022 10% 50V

Ref.No. or Q'ty	Part No.	Description
(AE-03 BOARD,2000PS-00,02,10,12/ 2180PS-00,02,CARD RACK)		
R128	1-215-394-00	RES,METAL 75 1% 1/6W
R246	1-215-395-00	RES,METAL 82 1% 1/6W
R274	1-215-411-00	RES,METAL 390 1% 1/6W
R249	1-215-413-00	RES,METAL 470 1% 1/6W
R273	1-215-414-00	RES,METAL 510 1% 1/6W
R138	1-215-435-00	RES,METAL 3.9K 1% 1/6W
R119	1-215-442-00	RES,METAL 7.5K 1% 1/6W
R248	1-215-445-00	RES,METAL 10K 1% 1/6W
RV12	1-224-937-00	RES,VAR,METAL 1K
RV3,4,6,9,13,16,17,32	1-224-940-00	RES,VAR,METAL 10K
RV1,2,5,8	1-224-941-00	RES,VAR,METAL 20K
RV15,18	1-226-095-00	RES,VAR,METAL 200K
RV28,29	1-228-580-00	RES,VAR,COMP 20K(B)
R81,253,264,265,266,283	1-247-767-00	RES,CARBON 2.2 5% 1/6W
R27,28,37,38,79,80,86, 100,101,244,277,278	1-247-799-00	RES,CARBON 47 5% 1/6W
R5,12,17,20,22,30,33,35, 48,49,55,56,57,62,63, 82,94,95,107,115,118, 321,323	1-247-807-00	RES,CARBON 100 5% 1/6W
R279	1-247-819-00	RES,CARBON 330 5% 1/6W
R135	1-247-823-00	RES,CARBON 470 5% 1/6W
R6,39,41,67,68	1-247-827-00	RES,CARBON 680 5% 1/6W
R18,44,66	1-247-831-00	RES,CARBON 1K 5% 1/6W
R123	1-247-834-00	RES,CARBON 1.3K 5% 1/6W
R34	1-247-835-00	RES,CARBON 1.5K 5% 1/6W
R2,16,24,25,59,69,131, 134,275	1-247-839-00	RES,CARBON 2.2K 5% 1/6W
R122,136	1-247-840-00	RES,CARBON 2.4K 5% 1/6W
R53	1-247-845-00	RES,CARBON 3.9K 5% 1/6W

Ref. No. or Q'ty	Part No.	Description
(AE-03 BOARD, 2000PS-00, 02, 10, 12/ 2180PS-00, 02, CARD RACK)		
R73, 141, 276	1-247-847-00	RES, CARBON 4.7K 5% 1/6W
R31	1-247-850-00	RES, CARBON 6.2K 5% 1/6W
R43, 51	1-247-851-00	RES, CARBON 6.8K 5% 1/6W
R11, 60, 61, 102	1-247-852-00	RES, CARBON 7.5K 5% 1/6W
R47, 74, 77	1-247-853-00	RES, CARBON 8.2K 5% 1/6W
R13, 14, 21, 23, 45, 46, 144, 145, 148, 149, 150, 151, 152, 153, 154, 155, 156, 161, 162, 163, 164, 285, 301, 302, 303, 304, 305, 306, 307, 308, 309, 310, 311, 312, 313, 314, 315, 316, 317	1-247-855-00	RES, CARBON 10K 5% 1/6W
R132	1-247-857-00	RES, CARBON 12K 5% 1/6W
R83	1-247-860-00	RES, CARBON 16K 5% 1/6W
R10, 32, 76	1-247-861-00	RES, CARBON 18K 5% 1/6W
R4, 90, 92, 133	1-247-863-00	RES, CARBON 22K 5% 1/6W
R97	1-247-865-00	RES, CARBON 27K 5% 1/6W
R129	1-247-866-00	RES, CARBON 30K 5% 1/6W
R87, 96, 146	1-247-867-00	RES, CARBON 33K 5% 1/6W
R126, 139	1-247-869-00	RES, CARBON 39K 5% 1/6W
R1	1-247-871-00	RES, CARBON 47K 5% 1/6W
R124, 137	1-247-873-00	RES, CARBON 56K 5% 1/6W
R64	1-247-875-00	RES, CARBON 68K 5% 1/6W
R112	1-247-876-00	RES, CARBON 75K 5% 1/6W
R52, 98, 109, 130, 250, 252, 286	1-247-879-00	RES, CARBON 100K 5% 1/6W
R15	1-247-880-00	RES, CARBON 110K 5% 1/6W
R99	1-247-881-00	RES, CARBON 120K 5% 1/6W

Ref. No. or Q'ty	Part No.	Description
(AE-03 BOARD, 2000PS-00, 02, 10, 12/ 2180PS-00, 02, CARD RACK)		
R78, 251	1-247-883-00	RES, CARBON 150K 5% 1/6W
R93	1-247-886-00	RES, CARBON 200K 5% 1/6W
R54, 245, 287	1-247-887-00	RES, CARBON 220K 5% 1/6W
R65	1-247-895-00	RES, CARBON 470K 5% 1/6W
R19	1-247-898-00	RES, CARBON 620K 5% 1/6W
R42	1-247-899-00	RES, CARBON 680K 5% 1/6W
R40, 50	1-247-903-00	RES, CARBON 1M 5% 1/6W
LV1	1-407-293-00	INDUCTOR, VAR, 1.5mH
LV2	1-407-297-00	INDUCTOR, VAR, 3.5mH
SW3	1-552-430-21	SWITCH, SLIDE
SW1, 2	1-553-440-00	SWITCH, TOGGLE
TP1, 2, 3, 4, 5, 6, 7, 8, 9, 11, 17, 18, 19		
TPE1, 2, 4, 7, 8, 9, 10, 11	() 3-657-703-01	TERMINAL, TP
1pc	() 3-673-865-00	LEVER, WITH PIN
1pc	() 3-673-867-00	PLATE, INDICATION, PC BOARD
1pc	() 3-674-612-00	LABEL (AE-03), PC BOARD
4pcs	7-621-981-15	SCREW, PSW2.6×6
2pcs	() 7-626-317-21	PIN, SPRING 2.5×8
D5	8-719-156-07	DIODE RD5.6E-B
D1	8-719-815-55	DIODE 1S1555
D3, 4	8-719-815-80	DIODE 1S1587
Q7, 9	8-729-117-54	TRANSISTOR 2SA1175
Q2, 4	8-729-177-32	TRANSISTOR 2SD773
Q1, 15	8-729-201-05	TRANSISTOR 2SC2878-B
Q3, 5, 8	8-729-373-92	TRANSISTOR 2SB739
IC34	8-759-178-05	IC UPC78L05
IC15	8-759-208-06	IC TC4051BPHB
IC1, 33	8-759-302-65	IC HA12017
IC2, 6, 8, 9, 11, 14	8-759-745-59	IC NJM4559D

Ref.No. or Q'ty	Part No.	Description
(AE-03 BOARD,2000PS-00,02,10,12/ 2180PS-00,02,CARD RACK)		
IC5	8-759-745-60	IC NJM4560D
IC21	8-759-900-00	IC SN74LS00N,TTL
IC22	8-759-900-04	IC SN74LS04N,TTL
IC19	8-759-901-25	IC SN74LS125AN,TTL
IC18	8-759-901-26	IC SN74LS126AN,TTL
IC17	8-759-908-20	IC TL820CN
IC3,4,7,10,12	8-759-921-91	IC TL191CN
IC16	8-759-990-82	IC TL082CP
Q6	8-769-194-00	TRANSISTOR 2SK43-4

AE-03 BOARD (BVH-2000PS-04,14/2180PS-04,CARD RACK)

1pc (for 04/14 model)		
	() A-6013-055-A	COMPLETE PCB,AE-03
(This assembly includes the following parts.)		
1pc	() X-3673-641-0	PLATE ASSY,SHIELD
C185,186	1-102-106-00	CAP,CERAMIC 100PF 10% 50V
C202	1-107-075-00	CAP,MICA 39PF 5% 50V
C175	1-107-077-00	CAP,MICA 47PF 5% 50V
C150	1-107-081-00	CAP,MICA 68PF 5% 50V
C174	1-107-085-00	CAP,MICA 100PF 5% 50V
C94,171	1-107-087-00	CAP,MICA 120PF 5% 50V
C180	1-107-089-00	CAP,MICA 150PF 5% 50V
C166,188	1-107-091-00	CAP,MICA 180PF 5% 50V
C203	1-107-158-00	CAP,MICA 30PF 5% 500V
C104	1-107-202-00	CAP,MICA 10PF 5% 500V
C4,15,161	1-107-210-00	CAP,MICA 22PF 5% 500V
C172	1-108-560-00	CAP,MYLAR 0.0016 5% 50V

Ref.No. or Q'ty	Part No.	Description
(AE-03 BOARD,2000PS-04,14/2180PS-04,CARD RACK)		
C148		
(One of the following capacitors is used.)		
	1-109-532-00	CAP,MICA 75PF 5% 100V
	1-107-085-00	CAP,MICA 100PF 5% 50V
C12	1-109-546-00	CAP,MICA 300PF 5% 100V
C157,165	1-109-549-00	CAP,MICA 390PF 5% 100V
C2,101	1-109-550-00	CAP,MICA 430PF 5% 100V
C3,5,9,11,19,20,25,26, 27,28,35,36,48,49,61, 63,70,71,73,74,89,90, 95,96,102,103,110,111, 120,121,122,123,131, 132,141,142	1-123-332-00	CAP,ELECT 47 25V
C23,24,41,42,118,119, 137,138,200,201	1-123-333-00	CAP,ELECT 100 25V
C16,17,21,22,56,57,62, 67,68,77,80,81,82,98, 99,100,116,117,125, 126,168,169,181,182	1-123-356-00	CAP,ELECT 10 50V
C33,92,129,164,183	1-130-467-00	CAP,MYLAR 470PF 5% 50V
C149	1-130-468-00	CAP,MYLAR 560PF 5% 50V
C153	1-130-469-00	CAP,MYLAR 680PF 5% 50V
C44,86,114	1-130-470-00	CAP,MYLAR 820PF 5% 50V
C64	1-130-471-00	CAP,MYLAR 0.001 5% 50V
C32,128	1-130-472-00	CAP,MYLAR 0.0012 5% 50V
C8,176	1-130-473-00	CAP,MYLAR 0.0015 5% 50V
C10,146	1-130-474-00	CAP,MYLAR 0.0018 5% 50V
C38,46,88,109,113,134	1-130-475-00	CAP,MYLAR 0.0022 5% 50V
C14	1-130-476-00	CAP,MYLAR 0.0027 5% 50V
C45,69,76,87,158	1-130-477-00	CAP,MYLAR 0.0033 5% 50V

Ref.No. or Q'ty	Part No.	Description
(AE-03 BOARD,2000PS-04,14/2180PS-04,CARD RACK)		
C154,177	1-130-480-00	CAP,MYLAR 0.0056 5% 50V
C106,151	1-130-481-00	CAP,MYLAR 0.0068 5% 50V
C159	1-130-482-00	CAP,MYLAR 0.0082 5% 50V
C51,93	1-130-620-00	CAP,FILM 0.01 5% 50V
C65	1-130-621-00	CAP,FILM 0.012 5% 50V
C162	1-130-622-00	CAP,FILM 0.015 5% 50V
C37,39,133,135	1-130-624-00	CAP,FILM 0.022 5% 50V
C160,173	1-130-632-00	CAP,FILM 0.1 5% 50V
C184	1-131-295-61	CAP,TANT 100 10% 6.3V
C156,170	1-131-344-00	CAP,TANT 0.33 10% 35V
C13,34,66	1-131-345-00	CAP,TANT 0.47 10% 35V
C179	1-131-346-00	CAP,TANT 0.68 10% 35V
C29,107,124,130	1-131-347-00	CAP,TANT 1 10% 35V
C178	1-131-348-00	CAP,TANT 1.5 10% 35V
C31,127	1-131-349-00	CAP,TANT 2.2 10% 35V
C163	1-131-350-00	CAP,TANT 3.3 10% 35V
C6,18,52,75,91,112,145, 189,190	1-131-351-00	CAP,TANT 4.7 10% 35V
C72	1-131-381-00	CAP,TANT 47 10% 10V
C7,105,108,140	1-136-156-00	CAP,FILM 0.018 5% 50V
C55	1-136-160-00	CAP,FILM 0.039 5% 50V
C147	1-136-166-00	CAP,FILM 0.12 5% 50V
C1,54,78,79,83,84,115, 143	1-161-055-00	CAP,CERAMIC 0.022 10% 50V
R128	1-215-394-00	RES,METAL 75 1% 1/6W
R246	1-215-395-00	RES,METAL 82 1% 1/6W
R274	1-215-411-00	RES,METAL 390 1% 1/6W
R249	1-215-413-00	RES,METAL 470 1% 1/6W

Ref.No. or Q'ty	Part No.	Description
(AE-03 BOARD,2000PS-04,14/2180PS-04,CARD RACK)		
R273	1-215-414-00	RES,METAL 510 1% 1/6W
R138	1-215-435-00	RES,METAL 3.9K 1% 1/6W
R119	1-215-442-00	RES,METAL 7.5K 1% 1/6W
R248	1-215-445-00	RES,METAL 10K 1% 1/6W
RV12,35,38	1-224-937-00	RES,VAR,METAL 1K
RV20	1-224-939-00	RES,VAR,METAL 5K
RV3,4,6,9,13,16,17,19, 22,24,25,27,32,34	1-224-940-00	RES,VAR,METAL 10K
RV1,2,5,8,23,26,33,36	1-224-941-00	RES,VAR,METAL 20K
RV37	1-224-943-00	RES,VAR,METAL 100K
RV15,18	1-226-095-00	RES,VAR,METAL 200K
RV28,29,30,31	1-230-742-11	RES,VAR,CARBON 20K(B)
R81	1-247-767-00	RES,CARBON 2.2 5% 1/6W
R27,28,37,38,79,80,86, 100,101,173,174,185, 186,210,211,231,232, 244,267,268,277,278	1-247-799-00	RES,CARBON 47 5% 1/6W
R5,12,17,20,22,30,33,35, 48,49,55,56,57,62,63, 82,94,95,107,115,118, 171,180,181,192,196, 201,202,203,221,222, 228,229,230,236,240, 321,322,323	1-247-807-00	RES,CARBON 100 5% 1/6W
R206,279	1-247-819-00	RES,CARBON 330 5% 1/6W
R200	1-247-821-00	RES,CARBON 390 5% 1/6W
R135	1-247-823-00	RES,CARBON 470 5% 1/6W
R6,39,41,67,68,195,212, 218,241,243	1-247-827-00	RES,CARBON 680 5% 1/6W

Ref.No. or Q'ty	Part No.	Description
(AE-03 BOARD,2000PS-04,14/2180PS-04,CARD RACK)		
R18,44,66,214,239	1-247-831-00	RES,CARBON 1K 5% 1/6W
R123	1-247-834-00	RES,CARBON 1.3K 5% 1/6W
R34,255	1-247-835-00	RES,CARBON 1.5K 5% 1/6W
R2,16,24,25,59,69,131, 134,187,197,207,233, 242,275	1-247-839-00	RES,CARBON 2.2K 5% 1/6W
R122,136	1-247-840-00	RES,CARBON 2.4K 5% 1/6W
R177	1-247-841-00	RES,CARBON 2.7K 5% 1/6W
R97	1-247-843-00	RES,CARBON 3.3K 5% 1/6W
R53,226	1-247-845-00	RES,CARBON 3.9K 5% 1/6W
R73,141,160,204,205,276	1-247-847-00	RES,CARBON 4.7K 5% 1/6W
R31	1-247-850-00	RES,CARBON 6.2K 5% 1/6W
R43,51,213,224,281	1-247-851-00	RES,CARBON 6.8K 5% 1/6W
R11,60,61,102,234,235	1-247-852-00	RES,CARBON 7.5K 5% 1/6W
R47,74,77,165,168,220, 272	1-247-853-00	RES,CARBON 8.2K 5% 1/6W
R13,14,21,23,45,46,87, 144,145,147,148,149, 150,151,152,153,154, 155,156,161,162,163, 164,208,209,215,216, 258,263,264,266,270, 271,283,301,302,303, 304,305,306,307,308, 309,310,311,312,313, 314,315,316,317	1-247-855-00	RES,CARBON 10K 5% 1/6W
R132,175	1-247-857-00	RES,CARBON 12K 5% 1/6W
R261,282	1-247-859-00	RES,CARBON 15K 5% 1/6W
R83,172	1-247-860-00	RES,CARBON 16K 5% 1/6W

Ref.No. or Q'ty	Part No.	Description
(AE-03 BOARD,2000PS-04,14/2180PS-04,CARD RACK)		
R10,32,76,167,178,193	1-247-861-00	RES,CARBON 18K 5% 1/6W
R4,133,254	1-247-863-00	RES,CARBON 22K 5% 1/6W
R194	1-247-864-00	RES,CARBON 24K 5% 1/6W
R179	1-247-865-00	RES,CARBON 27K 5% 1/6W
R129	1-247-866-00	RES,CARBON 30K 5% 1/6W
R146,183,188	1-247-867-00	RES,CARBON 33K 5% 1/6W
R126,139	1-247-869-00	RES,CARBON 39K 5% 1/6W
R256	1-247-870-00	RES,CARBON 43K 5% 1/6W
R124,137	1-247-873-00	RES,CARBON 56K 5% 1/6W
R189,262	1-247-874-00	RES,CARBON 62K 5% 1/6W
R64,265	1-247-875-00	RES,CARBON 68K 5% 1/6W
R112	1-247-876-00	RES,CARBON 75K 5% 1/6W
R1,52,98,109,130,176, 225,237,250,252,257, 260,286	1-247-879-00	RES,CARBON 100K 5% 1/6W
R15	1-247-880-00	RES,CARBON 110K 5% 1/6W
R99	1-247-881-00	RES,CARBON 120K 5% 1/6W
R78,93,96,169,251	1-247-883-00	RES,CARBON 150K 5% 1/6W
R9,54,198,227,245,259, 287	1-247-887-00	RES,CARBON 220K 5% 1/6W
R199,238	1-247-891-00	RES,CARBON 330K 5% 1/6W
R65	1-247-895-00	RES,CARBON 470K 5% 1/6W
R269	1-247-897-00	RES,CARBON 560K 5% 1/6W
R19	1-247-898-00	RES,CARBON 620K 5% 1/6W
R42,219	1-247-899-00	RES,CARBON 680K 5% 1/6W
R40,50,217,223	1-247-903-00	RES,CARBON 1M 5% 1/6W
R90,92	1-249-429-11	RES,CARBON 10K 5% 1/6W
LV1,6	1-407-293-00	INDUCTOR,VAR,1.5mH
LV2,3,4,5	1-407-297-00	INDUCTOR,VAR,3.5mH

Ref. No. or Q'ty	Part No.	Description
(AE-03 BOARD, 2000PS-04, 14/2180PS-04, CARD RACK)		
SW3	1-552-430-21	SWITCH, SLIDE
SW1, 2	1-553-440-00	SWITCH, TOGGLE
TP1, 2, 3, 4, 5, 6, 7, 8, 9, 10, 11, 12, 13, 14, 15, 16, 17, 18, 19		
TPE1, 2, 3, 4, 5, 6, 7, 8, 9, 10, 11, 12, 13		
	() 3-657-703-01	TERMINAL, TP
1pc	() 3-673-865-00	LEVER, WITH PIN
1pc	() 3-673-867-00	PLATE, INDICATION, PC BOARD
1pc	() 3-674-657-00	LABEL (AE-03), PC BOARD
4pcs	7-621-981-15	SCREW, PSW2. 6×6
2pcs	() 7-626-317-21	PIN, SPRING 2. 5×8
D5	8-719-156-07	DIODE RD5. 6E-B
D1	8-719-815-55	DIODE 1S1555
D3, 4, 6, 7	8-719-815-80	DIODE 1S1587
Q7, 9	8-729-117-54	TRANSISTOR 2SA1175
Q2, 4, 11, 13	8-729-177-32	TRANSISTOR 2SD773
Q1, 15	8-729-201-05	TRANSISTOR 2SC2878-B
Q3, 5, 8, 12, 14	8-729-373-92	TRANSISTOR 2SB739
IC35	8-759-045-38	IC MC14538BCP, CMOS
IC34	8-759-178-05	IC UPC78L05
IC15	8-759-208-06	IC TC4051BPHB
IC1, 26, 33	8-759-302-65	IC HA12017
IC2, 6, 8, 9, 11, 14, 23, 24, 27, 30, 32	8-759-745-59	IC NJM4559D
IC5, 29	8-759-745-60	IC NJM4560D
IC21	8-759-900-00	IC SN74LS00N, TTL
IC22	8-759-900-04	IC SN74LS04N, TTL
IC20	8-759-900-08	IC SN74LS08N, TTL
IC19	8-759-901-25	IC SN74LS125AN, TTL

Ref. No. or Q'ty	Part No.	Description
(AE-03 BOARD, 2000PS-04, 14/2180PS-04, CARD RACK)		
IC18	8-759-901-26	IC SN74LS126AN, TTL
IC17	8-759-908-20	IC TL820CN
IC3, 4, 7, 10, 12, 13, 25, 28, 31	8-759-921-91	IC TL191CN
IC16	8-759-990-82	IC TL082CP
Q6	8-769-194-00	TRANSISTOR 2SK43-4

Ref.No. or Q'ty	Part No.	Description
EQ-02 BOARD (BVH-2000PS,2180PS/CARD RACK)		
1pc	() A-6011-067-D	COMPLETE PCB,EQ-02 WITH EQ-11
1pc	() A-6011-095-B	COMPLETE PCB,EQ-02 WITH EQ-11
	(For BVH-2000PS 10,12,14 model)	
(This assembly includes the following parts.)		
1pc	() X-3673-641-0	PLATE ASSY,SHIELD
C98,107	1-102-106-00	CAP,CERAMIC 100PF 10% 50V
C15,58,119,120,127,130	1-107-078-00	CAP,MICA 51PF 5% 50V
C4,6,9,13,156,157,158, 159	1-107-081-00	CAP,MICA 68PF 5% 50V
C73	1-107-082-00	CAP,MICA 75PF 5% 50V
C99	1-107-157-00	CAP,MICA 27PF 5% 500V
C160	1-107-158-00	CAP,MICA 30PF 5% 500V
C142	1-107-202-00	CAP,MICA 10PF 5% 500V
C32	1-107-205-00	CAP,MICA 13PF 5% 500V
C60	1-107-208-00	CAP,MICA 18PF 5% 500V
C131	1-109-535-00	CAP,MICA 100PF 5% 100V
C132	1-109-538-00	CAP,MICA 130PF 5% 100V
C38,95	1-109-539-00	CAP,MICA 150PF 5% 100V
C134,135	1-123-380-00	CAP,ELECT 1 100V
C136	1-123-567-00	CAP,ELECT 2200 10V
C52,57	1-123-839-00	CAP,ELECT 1000 16V
C1,7,10,24,31,33,40,51, 68,76,79,96,104,121, 129,138,140	1-124-445-00	CAP,ELECT 100 16V
C54,55	1-124-474-00	CAP,ELECT 47 16V
C46,82,108,113,114	1-124-481-00	CAP,ELECT 22 35V
C111	1-124-656-00	CAP,ELECT,NONPOLAR 2.2 50V
C92	1-130-475-00	CAP,MYLAR 0.0022 5% 50V
C122,123	1-130-477-00	CAP,MYLAR 0.0033 5% 50V
C102	1-130-478-00	CAP,MYLAR 0.0039 5% 50V

Ref.No. or Q'ty	Part No.	Description
(EQ-02 BOARD,BVH-2000PS,2180PS/CARD RACK)		
C133	1-130-481-00	CAP,MYLAR 0.0068 5% 50V
C100	1-130-485-00	CAP,MYLAR 0.015 5% 50V
C103	1-130-487-00	CAP,MYLAR 0.022 5% 50V
C125	1-130-495-00	CAP,MYLAR 0.1 5% 50V
CV1	1-141-256-00	CAP,TRIMMER 8PF
C3,5,8,12,19,28,30,36, 37,39,42,43,44,45,59, 62,66,69,71,78,84,85, 87,89,93,97,105,112, 115,117,126,147	1-161-051-00	CAP,CERAMIC 0.01 10% 50V
C86,152,153,154,155	1-161-055-00	CAP,CERAMIC 0.022 10% 50V
C53,56,137	1-161-057-00	CAP,CERAMIC 0.033 10% 50V
C150,151	1-161-483-00	CAP,CERAMIC 0.1 10% 50V
C2,11,14,26,27,29,34,35, 41,47,50,61,63,64,65, 67,70,72,77,80,83,88, 90,91,94,101,106,109, 110,116,118,124,128, 139,170	1-162-596-00	CAP,CERAMIC 0.022 25V
R301,302,303,304	1-215-391-00	RES,METAL 56 1% 1/6W
R9,20,33,44	1-215-397-00	RES,METAL 100 1% 1/6W
R90,167	1-215-401-00	RES,METAL 150 1% 1/6W
R297	1-215-403-00	RES,METAL 180 1% 1/6W
R133	1-215-404-00	RES,METAL 200 1% 1/6W
R8,19,32,43	1-215-406-00	RES,METAL 240 1% 1/6W
R317,318,319,320	1-215-415-00	RES,METAL 560 1% 1/6W
R112	1-215-419-00	RES,METAL 820 1% 1/6W

Ref.No. or Q'ty	Part No.	Description
(EQ-02 BOARD,BVH-2000PS,2180PS/CARD RACK)		
R253	1-215-424-00	RES,METAL 1.3K 1% 1/6W
R191	1-215-425-00	RES,METAL 1.5K 1% 1/6W
R254	1-215-428-00	RES,METAL 2K 1% 1/6W
R211,R220	1-215-441-00	RES,METAL 6.8K 1% 1/6W
R296	1-215-443-00	RES,METAL 8.2K 1% 1/6W
R321	1-215-445-00	RES,METAL 10K 1% 1/6W
RV36,37	1-224-926-00	RES,VAR,METAL 500
RV9,10,11,12	1-224-935-00	RES,VAR,METAL 200
RV31,32,33,34	1-224-936-00	RES,VAR,METAL 500
RV13,14,16,18	1-224-937-00	RES,VAR,METAL 1K
RV27	1-224-938-00	RES,VAR,METAL 2K
RV35	1-224-941-00	RES,VAR,METAL 20K
RV26	1-224-942-00	RES,VAR,METAL 50K
RV22	1-230-837-11	RES,ADJ,CERMET 100
RV23,25,28	1-230-842-11	RES,ADJ,CERMET 5K
RV24	1-230-843-11	RES,ADJ,CERMET 10K
RV30	1-230-844-11	RES,ADJ,CERMET 20K
RV1,3,5,7	1-230-738-00	RES,VAR,COMP 200(B)
RV2,4,6,8	1-230-740-00	RES,VAR,COMP 5K(B)
R7,18,31,42,101	1-247-791-00	RES,CARBON 22 5% 1/6W
R85,91,108,109,134,140, 142,157,158,168,170, 176,197,324,325	1-247-795-00	RES,CARBON 33 5% 1/6W
R5,16,30,41,121,131,163	1-247-800-00	RES,CARBON 51 5% 1/6W
R146,147,188	1-247-804-00	RES,CARBON 75 5% 1/6W

Ref.No. or Q'ty	Part No.	Description
(EQ-02 BOARD,BVH-2000PS,2180PS/CARD RACK)		
R1,3,12,14,25,27,36,39, 82,92,106,113,114,115, 122,123,124,127,128, 129,136,137,138,148, 150,155,156,166,179, 180,189,210,214,215, 230,251,256,286,293, 359	1-247-807-00	RES,CARBON 100 5% 1/6W
R285	1-247-810-00	RES,CARBON 130 5% 1/6W
R308	1-247-811-00	RES,CARBON 150 5% 1/6W
R102,110,120,149,294	1-247-814-00	RES,CARBON 200 5% 1/6W
R94,111,139,171,172,175, 212,282,283,287	1-247-818-00	RES,CARBON 300 5% 1/6W
R2,4,13,15,26,28,37,38, 97,118,132,154	1-247-819-00	RES,CARBON 330 5% 1/6W
R306	1-247-820-00	RES,CARBON 360 5% 1/6W
R55,60,151,258,264	1-247-821-00	RES,CARBON 390 5% 1/6W
R162	1-247-822-00	RES,CARBON 430 5% 1/6W
R280	1-247-823-00	RES,CARBON 470 5% 1/6W
R213,252	1-247-824-00	RES,CARBON 510 5% 1/6W
R144	1-247-825-00	RES,CARBON 560 5% 1/6W
R99,100,107,116,135,141	1-247-827-00	RES,CARBON 680 5% 1/6W
R190	1-247-828-00	RES,CARBON 750 5% 1/6W
R53,54,57,58,259,260, 262,263,281,284	1-247-829-00	RES,CARBON 820 5% 1/6W
R87,89,98,104,105,125, 126,160,161,164,169, 174,177,192,194,198, 204,208,209,217,219, 228,234,241,250,225	1-247-831-00	RES,CARRON 1K 5% 1/6W

Ref.No. or Q'ty	Part No.	Description
(EQ-02 BOARD,BVH-2000PS,2180PS/CARD RACK)		
R61,130,270,271	1-247-832-00	RES,CARBON 1.1K 5% 1/6W
R307	1-247-834-00	RES,CARBON 1.3K 5% 1/6W
R6,17,29,40,56,59,261, 265	1-247-836-00	RES,CARBON 1.6K 5% 1/6W
R227	1-247-837-00	RES,CARBON 1.8K 5% 1/6W
R193,202,203,226,231, 248,257,289	1-247-838-00	RES,CARBON 2K 5% 1/6W
R88,93,165	1-247-839-00	RES,CARBON 2.2K 5% 1/6W
R275	1-247-847-00	RES,CARBON 4.7K 5% 1/6W
R206,233,240,309,310, 311,312,313,314,315, 316	1-247-848-00	RES,CARBON 5.1K 5% 1/6W
R96,103,196	1-247-849-00	RES,CARBON 5.6K 5% 1/6W
R195,221,222,223,224, 225	1-247-850-00	RES,CARBON 6.2K 5% 1/6W
R117,119,143,145,152, 153,279	1-247-852-00	RES,CARBON 7.5K 5% 1/6W
R199,207	1-247-857-00	RES,CARBON 12K 5% 1/6W
R247	1-247-859-00	RES,CARBON 15K 5% 1/6W
R205,239	1-247-863-00	RES,CARBON 22K 5% 1/6W
R277,278	1-247-864-00	RES,CARBON 24K 5% 1/6W
R45,46,47,48,49,50,51, 52,242,245	1-247-865-00	RES,CARBON 27K 5% 1/6W
R200,201,236	1-247-866-00	RES,CARBON 30K 5% 1/6W
R288	1-247-867-00	RES,CARBON 33K 5% 1/6W
R237	1-247-876-00	RES,CARBON 75K 5% 1/6W
R246,272,273,274,291, 292,295	1-247-879-00	RES,CARBON 100K 5% 1/6W
R290	1-247-882-00	RES,CARBON 130K 5% 1/6W
R218	1-247-888-00	RES,CARBON 240K 5% 1/6W
R229	1-247-889-00	RES,CARBON 270K 5% 1/6W
R340	1-249-414-11	RES,CARBON 560 5% 1/6W
R10,11,21,22,23,24,34, 35,173,178,181,182, 183,184,185,186,187, 216,235,238,243,244, 326,327,328,329,330, 331,333	1-249-429-11	RES,CARBON 10K 5% 1/6W
L5	1-408-399-00	INDUCTOR,MICRO,1.5 5%
L12,13,14,15,16	1-408-402-00	INDUCTOR,MICRO,2.7 5%
L3,4	1-408-421-00	INDUCTOR,MICRO,100 5%
L6,7	1-408-422-00	INDUCTOR,MICRO,120 5%
L10	1-408-658-00	INDUCTOR,VAR,2.7
LV1,2,3,4	1-408-659-00	INDUCTOR,VAR,3.3
DL1	1-415-275-00	DELAY LINE,28nS
DL2	1-415-276-00	DELAY LINE,56nS
L1,2,8	1-421-370-00	COIL,CHOKE
FB1,2,3	1-535-178-00	FERRITE BEAD
S1	1-553-441-00	SWITCH,TOGGEL
2pcs	1-563-859-11	RECEPTACLE CONNECTOR 2P
JP1,2,3	1-566-385-11	PIN,CONNECTOR 2P
TH1	1-800-202-00	THERMISTOR,S-10K
4pcs	2-282-313-00	KNOB,CONTROL
TP1,2,3,4,5,8,10,11,12, 15,16,21,22	() 3-657-703-01	TERMINAL,TP
TPE1,2,3,4,5,6	() 3-673-805-11	TERMINAL,TP

Ref.No. or Q'ty		Part No.	Description
(EQ-02 BOARD,BVH-2000PS,2180PS/CARD RACK)			
1pc	()	3-673-865-00	LEVER,WITH PIN
1pc	()	3-673-867-00	PLATE,INDICATION,PC BOARD
1pc	()	3-674-613-01	LABEL(EQ-02),PC BOARD
TP6	()	3-693-032-01	TERMINAL,TP
1pc	()	3-693-056-01	LABEL NS (EQ-02),PC BOARD
4pcs		7-621-737-08	SET SCREW,2.6x3, FLAT POINT
4pcs		7-621-981-15	SCREW,PSW2.6x6
2pcs		7-626-317-21	PIN,SPRING 2.5x8
D5		8-719-100-27	DIODE RD4.7E-B2
D1		8-719-168-07	DIODE RD6.8E-B
D2,3		8-719-815-55	DIODE 1S1555
D6		8-719-815-80	DIODE 1S1587
Q17		8-729-105-72	TRANSISTOR 2SK523-L1
Q25,26,38,39		8-729-110-53	TRANSISTOR 2SA1005
Q1,4,8,11,21,22,41		8-729-117-33	TRANSISTOR 2SC1733
IC1,17		8-759-001-16	IC MC10116L,ECL
IC21		8-759-001-98	IC MC10198L
IC3		8-759-015-95	IC MC1595L
IC22,24		8-759-900-00	IC SN74LS00N,TTL
IC15		8-759-900-04	IC SN74LS04N,TTL
IC16,18		8-759-900-08	IC SN74LS08N,TTL
IC23		8-759-900-19	IC SN74128N,TTL
IC25,26		8-759-901-23	IC SN74LS123N,TTL
IC19,20		8-759-902-21	IC SN74LS221N,TTL
IC27		8-759-906-01	IC TL601CP
IC11,12		8-759-906-07	IC TL607CP
IC13		8-759-926-10	IC TL610CP
IC6		8-759-931-02	IC CA3102E
IC4		8-759-939-93	IC AD9685BD
IC14		8-759-942-65	IC SN74265N,TTL
IC8		8-759-951-07	IC SN75107AN
IC5,10		8-759-990-82	IC TL082CP
IC7,9		8-759-990-84	IC TL084CN

Ref.No. or Q'ty		Part No.	Description
(EQ-02 BOARD,BVH-2000PS,2180PS/CARD RACK)			
Q3,6,7,10,29,30,31,32, 35		8-761-622-00	TRANSISTOR 2SC1636
Q2,5,9,12,15,16,18,19, 20,23,24,27,33,34,37, 40		8-765-300-00	TRANSISTOR 2SC2009
Q28,36		8-769-192-00	TRANSISTOR 2SK43-2

EQ-11 Board

1pc	()	A-6026-051-A	MOUNTED PCB,EQ-11
C182		1-109-531-00	CAP,MICA 68PF 5% 100V
C183		1-109-538-00	CAP,MICA 130PF 5% 100V
C184		1-109-545-00	CAP,MICA 270PF 5% 100V
C173,177		1-124-236-00	CAP,ELECT 47 20% 16V
C171,172,174,175,176, 178,179,180,181,185		1-162-596-00	CAP,CERAMIC 0.022 25V
RV41		1-228-452-00	RES,ADJ,CERMET 50
R355		1-247-800-00	RES,CARBON 51 5% 1/6W
R344		1-247-811-00	RES,CARBON 150 5% 1/6W
R356		1-247-814-00	RES,CARBON 200 5% 1/6W
R349		1-247-819-00	RES,CARBON 330 5% 1/6W
R351		1-247-820-00	RES,CARBON 360 5% 1/6W
R357		1-247-826-00	RES,CARBON 620 5% 1/6W
R341,342,343,350		1-247-831-00	RES,CARBON 1K 5% 1/6W
R354		1-247-833-00	RES,CARBON 1.2K 5% 1/6W
R348		1-247-837-00	RES,CARBON 1.8K 5% 1/6W
R347		1-247-839-00	RES,CARBON 2.2K 5% 1/6W
R345		1-247-846-00	RES,CARBON 4.3K 5% 1/6W
R346		1-247-852-00	RES,CARBON 7.5K 5% 1/6W
R352,353		1-249-405-11	RES,CARBON 100 5% 1/6W
L21		1-408-401-00	INDUCTOR,MICRO 2.2
L22		1-408-410-00	INDUCTOR,MICRO 12
S2		1-570-374-11	SWITCH,SLIDE
CN2	()	1-566-086-11	PLUG,DIL 8P
CN1	()	1-566-087-11	PLUG,DIL 14P
D11		8-719-156-07	DIODE RD5.6E-B
Q51,52,53		8-729-606-33	TRANSISTOR 2SC2603
IC31		8-759-939-93	IC AD9685BD

DM-25 BOARD (BVH-2000PS,2180PS/CARD RACK)

Board No; 1-606-661-11,12,13,14

Ref.No. or Q'ty	Part No.	Description
1pc	() A-6011-068-B	COMPLETE PCB,DM-25
(COMPLETE PCB,DM-25 includes MOUNT PCB,DM-51.)		
1pc	() A-6026-048-A	MOUNT PCB,DM-51
(COMPLETE PCB,DM-25 consists of the following parts.)		
1pc	() X-3673-641-0	PLATE ASSY,SHIELD
C14,69	1-102-106-00	CAP,CERAMIC 100PF 10% 50V
C76	1-107-026-00	CAP,MICA 5.1PF +/-0.5PF 500V
C144	1-107-080-00	CAP,MICA 62PF 5% 50V
C22,67,118,127,145	1-107-158-00	CAP,MICA 30PF 5% 500V
C81,82	1-107-159-00	CAP,MICA 33PF 5% 500V
C117,119	1-107-202-00	CAP,MICA 10PF 5% 500V
C92	1-107-204-00	CAP,MICA 12PF 5% 500V
C56,146	1-107-209-00	CAP,MICA 20PF 5% 500V
C24	1-108-603-00	CAP,MYLAR 0.1 5% 50V
C91	1-109-529-00	CAP,MICA 56PF 5% 100V
C509	1-109-530-00	CAP,MICA 62PF 5% 100V
C55	1-109-531-00	CAP,MICA 68PF 5% 100V
C26,104	1-109-535-00	CAP,MICA 100PF 5% 100V
C115	1-109-539-00	CAP,MICA 150PF 5% 100V
C10,11,31,53,58,100,503, 510,513	1-109-541-00	CAP,MICA 200PF 5% 100V
C504,507,511	1-109-542-00	CAP,MICA 220PF 5% 100V
C83	1-109-546-00	CAP,MICA 300PF 5% 100V
C45	1-109-548-00	CAP,MICA 360PF 5% 100V
C28	1-109-554-00	CAP,MICA 510PF 5% 100V
C60	1-109-602-00	CAP,MICA 0.001 1% 100V
C131	1-123-306-00	CAP,ELECT 47 10V
C7,63,110	1-123-307-00	CAP,ELECT 100 10V
C1,4	1-123-332-00	CAP,ELECT 47 25V

(DM-25 BOARD,CARD RACK)

(Board No.1-606-661-11,12,13,14)

Ref.No. or Q'ty	Part No.	Description
C45	1-109-548-00	CAP,MICA 360PF 5% 100V
C28	1-109-554-00	CAP,MICA 510PF 5% 100V
C60	1-109-602-00	CAP,MICA 0.001 1% 100V
C131	1-123-306-00	CAP,ELECT 47 10V
C7,63,110	1-123-307-00	CAP,ELECT 100 10V
C96,97,108	1-123-330-00	CAP,ELECT 22 25V
C1,4	1-123-332-00	CAP,ELECT 47 25V
C66,75,80,90,121,132	1-123-333-00	CAP,ELECT 100 25V
C30,140	1-123-379-00	CAP,ELECT 0.47 100V
C33	1-123-381-00	CAP,ELECT 2.2 100V
C9	1-123-567-00	CAP,ELECT 2200 10V
C73,74	1-123-829-00	CAP,ELECT,NONPOLAR 2.2 50V
C3,6	1-123-839-00	CAP,ELECT 1000 16V
CV2	1-141-240-00	CAP,TRIMMER 20PF
C13,15,19,20,21,23,25, 27,29,32,35,36,44,48, 52,57,59,61,62,64,65, 68,70,71,72,77,78,84, 85,86,87,88,89,93,94, 95,101,103,105,106,107, 109,112,113,114,116, 120,122,124,128,130, 133,136,137,138,139, 148	1-161-051-00	CAP,CERAMIC 0.01 10% 50V
C149	1-161-055-00	CAP,CERAMIC 0.022 10% 50V
C2,5,8	1-161-057-00	CAP,CERAMIC 0.033 10% 50V
R189,190,198	1-214-100-00	RES,METAL 47 1% 1/4W
R64,121,185,188	1-214-112-00	RES,METAL 150 1% 1/4W

Ref.No. or Q'ty	Part No.	Description
(DM-25 BOARD,CARD RACK)		
(Board No.1-606-661-11,12,13,14)		
R66	1-214-113-00	RES,METAL 160 1% 1/4W
R68,69	1-214-122-00	RES,METAL 390 1% 1/4W
R65	1-214-129-00	RES,METAL 750 1% 1/4W
R104	1-214-132-00	RES,METAL 1K 1% 1/4W
R213	1-214-138-00	RES,METAL 1.8K 1% 1/4W
R132,133	1-214-139-00	RES,METAL 2K 1% 1/4W
R41	1-214-140-00	RES,METAL 2.2K 1% 1/4W
R214	1-214-143-00	RES,METAL 3K 1% 1/4W
R42	1-214-144-00	RES,METAL 3.3K 1% 1/4W
R218	1-214-151-00	RES,METAL 6.2K 1% 1/4W
R43	1-214-155-00	RES,METAL 9.1K 1% 1/4W
R13,23,61,134,135,141	1-214-156-00	RES,METAL 10K 1% 1/4W
R40,59	1-214-160-00	RES,METAL 15K 1% 1/4W
R210	1-214-162-00	RES,METAL 18K 1% 1/4W
R30	1-214-165-00	RES,METAL 24K 1% 1/4W
R7	1-214-175-00	RES,METAL 62K 1% 1/4W
RV7,9	1-224-934-00	RES,VAR,METAL 100
RV4	1-224-935-00	RES,VAR,METAL 200
RV5,8,16	1-224-936-00	RES,VAR,METAL 500
RV14	1-224-937-00	RES,VAR,METAL 1K
RV3,6	1-224-939-00	RES,VAR,METAL 5K
RV2	1-224-940-00	RES,VAR,METAL 10K
RV10,11,15	1-224-941-00	RES,VAR,METAL 20K
RV12	1-224-942-00	RES,VAR,METAL 50K
RV1,13	1-224-943-00	RES,VAR,METAL 100K
RV17	1-224-978-00	RES,VAR,METAL 50
RB1	1-231-407-00	RES BLOCK,2.2Kx8
LPF1	1-235-014-00	FILTER,LOW-PASS 5MHz
LPF2	1-235-104-00	FILTER,LOW-PASS 7.5MHz
R118	1-247-767-00	RES,CARBON 2.2 5% 1/6W
R212	1-247-779-00	RES,CARBON 6.8 5% 1/6W
R70	1-247-787-00	RES,CARBON 15 5% 1/6W
R195	1-247-795-00	RES,CARBON 33 5% 1/6W
R90,91	1-247-800-00	RES,CARBON 51 5% 1/6W

Ref.No. or Q'ty	Part No.	Description
(DM-25 BOARD,CARD RACK)		
(Board No.1-606-661-11,12,13,14)		
R72,74,186	1-247-804-00	RES,CARBON 75 5% 1/6W
R57,106,110,122,123, 126,130,138,140,143, 145,161,164,168,184, 196,199,200,217	1-247-807-00	RES,CARBON 100 5% 1/6W
R71,73,75,89,149	1-247-811-00	RES,CARBON 150 5% 1/6W
R109,169	1-247-814-00	RES,CARBON 200 5% 1/6W
R166,215	1-247-817-00	RES,CARBON 270 5% 1/6W
R85,86,171	1-247-818-00	RES,CARBON 300 5% 1/6W
R177	1-247-819-00	RES,CARBON 330 5% 1/6W
R67,76,82,114	1-247-821-00	RES,CARBON 390 5% 1/6W
R160	1-247-823-00	RES,CARBON 470 5% 1/6W
R120,125	1-247-824-00	RES,CARBON 510 5% 1/6W
R129	1-247-825-00	RES,CARBON 560 5% 1/6W
R150	1-247-826-00	RES,CARBON 620 5% 1/6W
R175,181	1-247-827-00	RES,CARBON 680 5% 1/6W
R79,80,84,87,107,111, 112,113,116,117	1-247-829-00	RES,CARBON 820 5% 1/6W
R201	1-247-830-00	RES,CARBON 910 5% 1/6W
R9,11,50,51,54,108, 124,142,146,147,148, 152,187,193,197	1-247-831-00	RES,CARBON 1K 5% 1/6W
R77,81,88	1-247-832-00	RES,CARBON 1.1K 5% 1/6W
R78,83,115	1-247-836-00	RES,CARBON 1.6K 5% 1/6W

Ref.No. or Q'ty	Part No.	Description
(DM-25 BOARD,CARD RACK)		
(Board No.1-606-661-11,12,13,14)		
R5,16,17,56,102,127,128, 131,139,176,182	1-247-838-00	RES,CARBON 2K 5% 1/6W
R49	1-247-839-00	RES,CARBON 2.2K 5% 1/6W
R24,48,101,136	1-247-842-00	RES,CARBON 3K 5% 1/6W
R154	1-247-845-00	RES,CARBON 3.9K 5% 1/6W
R15,96,159,180	1-247-848-00	RES,CARBON 5.1K 5% 1/6W
R105	1-247-849-00	RES,CARBON 5.6K 5% 1/6W
R62	1-247-850-00	RES,CARBON 6.2K 5% 1/6W
R27,173	1-247-851-00	RES,CARBON 6.8K 5% 1/6W
R162,163	1-247-852-00	RES,CARBON 7.5K 5% 1/6W
R137	1-247-854-00	RES,CARBON 9.1K 5% 1/6W
R12,18,19,20,39,44,45, 46,58,100,156,157,158, 167,170,179,183,191, 194	1-247-855-00	RES,CARBON 10K 5% 1/6W
R98,153	1-247-858-00	RES,CARBON 13K 5% 1/6W
R1,2,25	1-247-859-00	RES,CARBON 15K 5% 1/6W
R55	1-247-862-00	RES,CARBON 20K 5% 1/6W
R63	1-247-863-00	RES,CARBON 22K 5% 1/6W
R32,34,192	1-247-866-00	RES,CARBON 30K 5% 1/6W
R36	1-247-867-00	RES,CARBON 33K 5% 1/6W
R174,208	1-247-870-00	RES,CARBON 43K 5% 1/6W
R144,151	1-247-871-00	RES,CARBON 47K 5% 1/6W
R202	1-247-872-00	RES,CARBON 51K 5% 1/6W
R52	1-247-878-00	RES,CARBON 91K 5% 1/6W
R26,28,38,47,53,60,103, 178	1-247-879-00	RES,CARBON 100K 5% 1/6W
R99	1-247-882-00	RES,CARBON 130K 5% 1/6W
R210	1-247-890-00	RES,CARBON 300K 5% 1/6W
R22	1-247-892-00	RES,CARBON 360K 5% 1/6W

Ref.No. or Q'ty	Part No.	Description
(DM-25 BOARD,CARD RACK)		
(Board No.1-606-661-11,12,13,14)		
R21,97	1-247-903-00	RES,CARBON 1M 5% 1/6W
L7	1-408-405-00	INDUCTOR,MICRO,4.7 5%
L12	1-408-409-00	INDUCTOR,MICRO,10 5%
L5,6	1-408-416-00	INDUCTOR,MICRO,39 5%
L11	1-408-420-00	INDUCTOR,MICRO,82 5%
L10	1-408-421-00	INDUCTOR,MICRO,100 5%
L8,9	1-408-426-00	INDUCTOR,MICRO,270 5%
L1,2,3	1-409-339-00	COIL,SN
SW2A	1-516-925-21	SWITCH,DIP,8-CKT
X1	1-527-935-00	CRYSTAL,8.9MHz
FB1,2,3,4,5,6,7,8,9,10, 11,12,13,14,15,16,17, 18,19,20	1-535-178-00	FERRITE BEAD
SW1	1-553-441-00	SWITCH,TOGGLE
TP1,2,3,4,5,6,7,8,9,10, 11,12,13,14	() 3-673-805-01	TERMINAL,TP
TPE1,2,3,4,5,6	() 3-673-805-11	TERMINAL,TP
1pc	() 3-673-865-00	LEVER,WITH PIN
1pc	() 3-673-867-00	PLATE,INDICATION, PC BOARD
1pc	() 3-674-614-00	LABEL(DM-25),PC BOARD
6pcs	4-866-397-00	CUSHION,LED
4pcs	7-621-981-15	SCREW,PSW 2.6x6
2pcs	() 7-626-317-21	PIN,SPRING 2.5x8
D10	8-719-100-27	DIODE RD4.7E-B2
D6,9	8-719-100-40	DIODE RD6.8E-B1
D12	8-719-139-07	DIODE RD3.9E-B
D1,2,3,4,5,7,8,11,13	8-719-815-55	DIODE 1S1555
Q12,13,14	8-729-105-71	TRANSISTOR 2SK523-K2
Q3,4,9	8-729-110-53	TRANSISTOR 2SA1005
Q15	8-729-699-51	TRANSISTOR 2SA995

Ref.No. or Q'ty	Part No.	Description
(DM-25 BOARD,CARD RACK)		
(Board No.1-606-661-11,12,13,14)		
IC12,13	8-743-930-00	IC BX3930
IC1,15,16,17	8-743-931-10	IC BX3931A
IC2,6	8-759-001-16	IC MC10116L,ECL
IC4	8-759-001-98	IC MC10198L
IC7	8-759-014-96	IC MC1496P
IC3A	8-759-245-28	IC TC4528BP,CMOS
IC5	8-759-301-17	IC HD10117,ECL
IC1C,2D,3C,5B	8-759-900-00	IC SN74LS00N,TTL
IC1D	8-759-900-04	IC SN74LS04N,TTL
IC4E	8-759-900-08	IC SN74LS08N,TTL
IC1A,3B	8-759-900-10	IC SN74LS10N,TTL
IC2E	8-759-900-74	IC SN74LS74AN,TTL
IC3D,5A	8-759-901-23	IC SN74LS123N,TTL
IC2B	8-759-901-51	IC SN74LS151N,TTL
IC2C	8-759-901-63	IC SN74LS163AN,TTL
IC1B,4A,4B,4C,4D,5C,5D, 5E	8-759-902-21	IC SN74LS221N,TTL
IC9	8-759-926-10	IC TL610CP
IC10,1E	8-759-951-07	IC SN75107AN
IC14	8-759-974-06	IC SN7406N,TTL
IC3,8,11	8-759-990-82	IC TL082CP
IC2F,3F	8-759-990-84	IC TL084CN
Q11	8-761-622-00	TRANSISTOR 2SC1636
Q1,5,6,7,8,10	8-765-300-00	TRANSISTOR 2SC2009

Ref.No. or Q'ty	Part No.	Description
DM-25 BOARD (BVH-2000PS,2180PS/CARD RACK)		
Board No; 1-606-661-15 & up		
1pc	() A-6011-068-C	COMPLETE PCB,DM-25
(COMPLETE PCB,DM-25 includes MOUNT PCB,DM-51)		
1pc	() A-6026-048-A	MOUNT PCB,DM-51
(COMPLETE PCB,DM-25 consists of the following parts.)		
1pc	() X-3673-641-0	PLATE ASSY,SHIELD
C14,69	1-102-106-00	CAP,CERAMIC 100PF 10% 50V
C76	1-107-026-00	CAP,MICA 5.1PF +/-0.5PF 500V
C144	1-107-080-00	CAP,MICA 62PF 5% 50V
C145	1-107-084-00	CAP,MICA 91PF 5% 50V
C22,67,118,127,145	1-107-158-00	CAP,MICA 30PF 5% 500V
C81,82	1-107-159-00	CAP,MICA 33PF 5% 500V
C117,119	1-107-202-00	CAP,MICA 10PF 5% 500V
C92	1-107-204-00	CAP,MICA 12PF 5% 500V
C146	1-107-209-00	CAP,MICA 20PF 5% 500V
C91	1-109-529-00	CAP,MICA 56PF 5% 100V
C509	1-109-530-00	CAP,MICA 62PF 5% 100V
C55	1-109-531-00	CAP,MICA 68PF 5% 100V
C26,104	1-109-535-00	CAP,MICA 100PF 5% 100V
C10,11,31,53,58,100,115, 503,510,513	1-109-541-00	CAP,MICA 200PF 5% 100V
C504,507,511	1-109-542-00	CAP,MICA 220PF 5% 100V
C83	1-109-546-00	CAP,MICA 300PF 5% 100V
C45	1-109-548-00	CAP,MICA 360PF 5% 100V
C28	1-109-554-00	CAP,MICA 510PF 5% 100V
C60	1-109-602-00	CAP,MICA 1000PF 1% 100V
C501,502	1-109-622-00	CAP,MICA 1200PF 1% 100V
C96,97,108,152	1-123-317-00	CAP,ELECT 22 20% 16V

Ref.No. or Q'ty	Part No.	Description
(DM-25 BOARD,BVH-2000PS,2180PS/CARD RACK) (Board No.1-606-661-15 & up)		
C30,140	1-123-351-00	CAP,ELECT 0.47 20% 50V
C33,515	1-123-353-00	CAP,ELECT 2.2 20% 50V
C9	1-123-567-00	CAP,ELECT 2200 20% 10V
C3,6	1-123-839-00	CAP,ELECT 1000 20% 16V
C7,63,66,75,80,90,110, 121,132	1-124-445-00	CAP,ELECT 100 20% 16V
C1,4,131	1-124-474-00	CAP,ELECT NONPOLAR 47 20% 16V
C73,74	1-124-656-00	CAP,ELECT NONPOLAR 2.2 20% 50V
C505	1-130-471-00	CAP,MYLAR 0.001 5% 50V
C516,521	1-130-472-00	CAP,MYLAR 0.0012 5% 50V
C43	1-130-475-00	CAP,MYLAR 0.0022 5% 50V
C519,520	1-130-477-00	CAP,MYLAR 0.0033 5% 50V
C39	1-130-486-00	CAP,MYLAR 0.018 5% 50V
C54	1-130-487-00	CAP,MYLAR 0.022 5%
C24	1-130-495-00	CAP,MYLAR 0.1 5% 50V
CV2	1-141-240-00	CAP,TRIMMER 20PF
C62,68,70,85,86,87,88, 89,93,95,139,149	1-161-051-00	CAP,CERAMIC 0.01 10% 50V
C2,5,8	1-161-057-00	CAP,CERAMIC 0.033 10% 50V
C523	1-162-306-31	CAP,CERAMIC 0.01 30% 16V
C13,15,19,20,21,23,25, 27,29,32,35,36,44,48, 59,61,64,65,71,72,77, 78,84,94,101,103,105, 106,107,109,112,113, 114,116,120,122,124, 128,130,136,137,138, 148,506,508,512,514, 517,518	1-162-596-00	CAP,CERAMIC 0.022 25V
R224	1-214-526-00	RES,METAL 51 1% 1/8W
R72,74	1-214-530-00	RES,METAL 75 1% 1/8W
R71,73,75	1-214-537-00	RES,METAL 150 1% 1/8W
R212	1-215-382-00	RES,METAL 24 1% 1/6W
R189,190,198	1-215-389-00	RES,METAL 47 1% 1/6W

Ref.No. or Q'ty	Part No.	Description
(DM-25 BOARD,BVH-2000PS,2180PS/CARD RACK) (Board No.1-606-661-15 & up)		
R64,121,185,188	1-215-401-11	RES,METAL 150 1% 1/6W
R66	1-215-402-00	RES,METAL 160 1% 1/6W
R68,69	1-215-411-00	RES,METAL 390 1% 1/6W
R65	1-215-418-00	RES,METAL 750 1% 1/6W
R104	1-215-421-00	RES,METAL 1K 1% 1/6W
R213	1-215-427-00	RES,METAL 1.8K 1% 1/6W
R132,133	1-215-428-00	RES,METAL 2K 1% 1/6W
R41	1-215-429-00	RES,METAL 2.2K 1% 1/6W
R214	1-215-432-00	RES,METAL 3K 1% 1/6W
R42	1-215-433-00	RES,METAL 3.3K 1% 1/6W
R59	1-215-438-00	RES,METAL 5.1K 1% 1/6W
R218	1-215-440-00	RES,METAL 6.2K 1% 1/6W
R43	1-215-444-00	RES,METAL 9.1K 1% 1/6W
R13,23,59,61,134,135, 141	1-215-445-00	RES,METAL 10K 1% 1/6W
R509	1-215-448-00	RES,METAL 13K 1% 1/6W
R40,506	1-215-449-00	RES,METAL 15K 1% 1/6W
R210	1-215-451-00	RES,METAL 18K 1% 1/6W
R504	1-215-452-00	RES,METAL 20K 1% 1/6W
R502	1-215-454-00	RES,METAL 24K 1% 1/6W
R521	1-215-455-00	RES,METAL 27K 1% 1/6W
R507	1-215-456-00	RES,METAL 30K 1% 1/6W
R505	1-215-459-00	RES,METAL 39K 1% 1/6W
R503,508,510	1-215-460-00	RES,METAL 43K 1% 1/6W
R7,501,519	1-215-464-00	RES,METAL 62K 1% 1/6W
R511,512	1-215-469-00	RES,METAL 100K 1% 1/6W
R517	1-215-476-00	RES,METAL 200K 1% 1/6W
RV7	1-224-934-00	RES,VAR,METAL 100
RV4	1-224-935-00	RES,VAR,METAL 200
RV17	1-228-452-00	RES,VAR,CERMET 50
RV5,8,16	1-230-839-11	RES,VAR,CERMET 500
RV14	1-230-840-11	RES,VAR,CERMET 1K
RV3,6,502	1-230-842-11	RES,VAR,CERMET 5K

Ref.No. or Q'ty	Part No.	Description
(DM-25 BOARD,BVH-2000PS,2180PS/CARD RACK)		
(Board No.1-606-661-15 & up)		
RV501,503	1-230-843-11	RES,VAR,CERMET 10K
RV10,11,15	1-230-844-11	RES,VAR,CERMET 20K
RV12	1-230-845-11	RES,VAR,CERMET 50K
RV1,13	1-230-846-11	RES,VAR,CERMET 100K
RV9	1-230-837-11	RES,VAR,METAL 100
RB1	1-231-407-00	RES,BLOCK 2.2x8
LPF1	1-235-014-00	FILTER,LOW PASS 5MHz
LPF2	1-235-104-00	FILTER,LOW PASS 7.5MHz
R212	1-247-779-00	RES,CARBON 6.8 5% 1/6W
R70	1-247-787-00	RES,CARBON 15 5% 1/6W
R195	1-247-795-00	RES,CARBON 33 5% 1/6W
R90,91	1-247-800-00	RES,CARBON 51 5% 1/6W
R186	1-247-804-00	RES,CARBON 75 5% 1/6W
R57,106,110,122,123,126, 130,138,140,143,145, 161,164,168,184,196, 199,200,217	1-247-807-00	RES,CARBON 100 5% 1/6W
R89,149	1-247-811-00	RES,CARBON 150 5% 1/6W
R109,169	1-247-814-00	RES,CARBON 200 5% 1/6W
R166,215	1-247-817-00	RES,CARBON 270 5% 1/6W
R85,86,171	1-247-818-00	RES,CARBON 300 5% 1/6W
R177	1-247-819-00	RES,CARBON 330 5% 1/6W
R67,76,82,114	1-247-821-00	RES,CARBON 390 5% 1/6W
R160	1-247-823-00	RES,CARBON 470 5% 1/6W
R120,125	1-247-824-00	RES,CARBON 510 5% 1/6W
R129	1-247-825-00	RES,CARBON 560 5% 1/6W
R150	1-247-826-00	RES,CARBON 620 5% 1/6W
R175,181	1-247-827-00	RES,CARBON 680 5% 1/6W

Ref.No. or Q'ty	Part No.	Description
(DM-25 BOARD,BVH-2000PS,2180PS/CARD RACK)		
(Board No.1-606-661-15 & up)		
R79,80,84,87,107,111, 112,113,116,117	1-247-829-00	RES,CARBON 820 5% 1/6W
R201	1-247-830-00	RES,CARBON 910 5% 1/6W
R9,11,50,51,108,124,142, 146,147,148,152,187, 197	1-247-831-00	RES,CARBON 1K 5% 1/6W
R77,81,88	1-247-832-00	RES,CARBON 1.1K 5% 1/6W
R78,83,115	1-247-836-00	RES,CARBON 1.6K 5% 1/6W
R5,16,17,102,127,128, 131,139,176,182	1-247-838-00	RES,CARBON 2K 5% 1/6W
R49	1-247-839-00	RES,CARBON 2.2K 5% 1/6W
R24,48,101,136	1-247-842-00	RES,CARBON 3K 5% 1/6W
R154	1-247-845-00	RES,CARBON 3.9K 5% 1/6W
R6	1-247-847-00	RES,CARBON 4.7K 5% 1/6W
R15,96,159,180	1-247-848-00	RES,CARBON 5.1K 5% 1/6W
R105	1-247-849-00	RES,CARBON 5.6K 5% 1/6W
R27,173	1-247-851-00	RES,CARBON 6.8K 5% 1/6W
R162,163	1-247-852-00	RES,CARBON 7.5K 5% 1/6W
R137	1-247-854-00	RES,CARBON 9.1K 5% 1/6W
R98,153	1-247-858-00	RES,CARBON 13K 5% 1/6W
R1,2,25	1-247-859-00	RES,CARBON 15K 5% 1/6W
R55,63	1-247-862-00	RES,CARBON 20K 5% 1/6W

Ref.No. or Q'ty	Part No.	Description
(DM-25 BOARD,BVH-2000PS,2180PS/CARD RACK)		
(Board No.1-606-661-15 & up)		
R32,192	1-247-866-00	RES,CARBON 30K 5% 1/6W
R174	1-247-870-00	RES,CARBON 43K 5% 1/6W
R202	1-247-872-00	RES,CARBON 51K 5% 1/6W
R26,28,38,47,60,103,178	1-247-879-00	RES,CARBON 100K 5% 1/6W
R99	1-247-882-00	RES,CARBON 130K 5% 1/6W
R211	1-247-890-00	RES,CARBON 300K 5% 1/6W
R22	1-247-892-00	RES,CARBON 360K 5% 1/6W
R21,97	1-247-903-00	RES,CARBON 1M 5% 1/6W
R12,18,19,20,39,44,45, 46,58,100,156,157,158, 167,170,179,183,191, 194,221,222,223,513, 514,516,518	1-249-429-11	RES,CARBON 10K 5% 1/6W
R144,151	1-249-437-11	RES,CARBON 47K 5% 1/6W
L7	1-408-405-00	INDUCTOR,MICRO 4.7
L12	1-408-409-00	INDUCTOR,MICRO 10
L5,6	1-408-416-00	INDUCTOR,MICRO 39
L11	1-408-420-00	INDUCTOR,MICRO 82
L10	1-408-421-00	INDUCTOR,MICRO 100
L8,9	1-408-426-00	INDUCTOR,MICRO 270
L1,2,3	1-421-370-00	COIL,CHOKE
X1	1-527-935-00	CRYSTAL 8.900MHz
FB1,2,3,4,5,6,7,8,9,10, 11,12,13,14,15,16,17, 18,19,20	1-535-178-00	FERRITE BEAD
SW1	1-553-441-00	SWITCH,TOGGLE
SW2A	1-570-623-11	SWITCH,DIP,8-CKT
TP1,2,3,4,5,6,7,8,9,10, 11,12,13,14,16,17,18, 501,502,503,504,505	() 3-657-703-01	TERMINAL,TP
TPE1,2,3,4	() 3-673-805-11	TERMINAL,TP
1pc	() 3-673-865-00	LEVER,WITH PIN
1pc	() 3-673-867-00	PLATE,INDICATION,PC BOARD
1pc	() 3-674-614-00	LABEL (DM-25),PC BOARD

Ref.No. or Q'ty	Part No.	Description
(DM-25 BOARD,BVH-2000PS,2180PS/CARD RACK)		
(Board No.1-606-661-15 & up)		
4pcs	7-621-981-15	SCREW,PSW 2.6x6
2pcs	7-626-317-21	PIN,SPRING 2.5x8
D10	8-719-100-27	DIODE RD4.7E-B
D6,9	8-719-100-40	DIODE RD6.8E-B1
D12	8-719-139-07	DIODE RD3.9E-B
D1,2,3,4,5,7,8,11,13	8-719-815-55	DIODE 1S1555
Q12,13,14	8-729-105-71	TRANSISTOR 2SK523-K2
Q3,4,9	8-729-110-53	TRANSISTOR 2SA1005
Q15	8-729-699-51	TRANSISTOR 2SA995
IC12,13	8-749-930-00	IC BX3930
IC1,15,16,17	8-749-931-10	IC BX3931
IC2,6	8-759-001-16	IC MC10116L,ECL
IC4	8-759-001-98	IC MC10198L
IC7	8-759-014-96	IC MC1496P
IC1C	8-759-245-28	IC TC4528BP,CMOS
IC5	8-759-301-17	IC HD10117,ECL
IC1D,3A,3E,4A,4D,5E	8-759-900-00	IC SN74LS00N,TTL
IC3F	8-759-900-04	IC SN74LS04N,TTL
IC4G	8-759-900-08	IC SN74LS08N,TTL
IC2C	8-759-900-10	IC SN74LS10N,TTL
IC1F,4C,5F	8-759-900-74	IC SN74LS74AN,TTL
IC3C,5D	8-759-901-23	IC SN74LS123N,TTL
IC2B	8-759-901-51	IC SN74LS151N,TTL
IC3B	8-759-901-63	IC SN74LS163AN,TTL
IC1B,1E,2D,2E,2F,3D,4B, 4E,4F,5B,5C,5G	8-759-902-21	IC SN74LS221N,TTL
IC9	8-759-926-10	IC TL610CP
IC10,1G	8-759-951-07	IC SN75107AN,TTL
IC14	8-759-974-06	IC SN7406N,TTL
IC3,8,11	8-759-990-82	IC TL082CP
IC2G,3G	8-759-990-84	IC TL084CN
Q11	8-761-622-00	TRANSISTOR 2SC1636
Q1,5,6,7,8,10	8-765-300-00	TRANSISTOR 2SC2009

Ref.No. or Q'ty	Part No.	Description
MD-14 BOARD (BVH-2000PS,2180PS/CARD RACK)		
1pc	() A-6011-069-A	COMPLETE PCB,MD-14
	() A-6011-096-A	COMPLETE PCB,MD-14 (For BVH-2000PS 10,12,14 model)
(This assembly includes the following parts.)		
1pc	() X-3673-641-0	PLATE ASSY,SHIELD
C82,128	1-102-106-00	CAP,CERAMIC 100PF 10% 50V
C3,12	1-107-044-00	CAP,MICA 3.3PF +/-0.5PF 500V
C501	1-107-046-00	CAP,MICA 4.7PF +/-0.5PF 500V
C42	1-107-048-00	CAP,MICA 6.8PF +/-0.5PF 500V
C18	1-107-074-00	CAP,MICA 36PF 5% 50V
C507	1-107-077-00	CAP,MICA 47PF 5% 50V
C111	1-107-082-00	CAP,MICA 75PF 5% 50V
C99,122	1-107-158-00	CAP,MICA 30PF 5% 500V
C69	1-107-164-00	CAP,MICA 51PF 5% 500V
C70	1-107-167-00	CAP,MICA 75PF 5% 500V
C93,150	1-107-169-00	CAP,MICA 100PF 5% 500V
C35,41	1-107-202-00	CAP,MICA 10PF 5% 500V
C23	1-107-207-00	CAP,MICA 16PF 5% 500V
C94	1-108-555-00	CAP,MYLAR 0.001 5% 50V
C138	1-108-563-00	CAP,MYLAR 0.0022 5% 50V
C88	1-108-567-00	CAP,MYLAR 0.0033 5% 50V
C143	1-108-571-00	CAP,MYLAR 0.0047 5% 50V
C135	1-108-573-00	CAP,MYLAR 0.0056 5% 50V
C137	1-108-575-00	CAP,MYLAR 0.0068 5% 50V
C78,79	1-108-579-00	CAP,MYLAR 0.01 5% 50V
C145	1-108-593-00	CAP,MYLAR 0.039 5% 50V
C504	1-109-525-00	CAP,MICA 39PF 5% 100V
C124,133	1-109-528-00	CAP,MICA 51PF 5% 100V
C8	1-109-531-00	CAP,MICA 68PF 5% 100V
C506	1-109-534-00	CAP,MICA 91PF 5% 100V
C102,136	1-109-535-00	CAP,MICA 100PF 5% 100V
C62	1-109-538-00	CAP,MICA 130PF 5% 100V

Ref.No. or Q'ty	Part No.	Description
(MD-14 BOARD,CARD RACK)		
C134,139,142	1-109-541-00	CAP,MICA 200PF 5% 100V
C125,127	1-109-548-00	CAP,MICA 360PF 5% 100V
C25,74	1-109-553-00	CAP,MICA 470PF 5% 100V
C100	1-109-557-00	CAP,MICA 680PF 5% 100V
C60,108,401	1-109-558-00	CAP,MICA 750PF 5% 100V
C505	1-109-559-00	CAP,MICA 820PF 5% 100V
C19	1-109-682-41	CAP,MICA 240PF 1% 500V
C149	1-123-307-00	CAP,ELECT 100 10V
C9,45,48	1-123-322-00	CAP,ELECT 330 16V
C73,75,76,77,91,92,104, 131,132,508,509	1-123-330-00	CAP,ELECT 22 25V
C51,54	1-123-332-00	CAP,ELECT 47 25V
C10,14,17,21,27,29,30, 65,66,71,97,109,114	1-123-333-00	CAP,ELECT 100 25V
C147	1-123-567-00	CAP,ELECT 2200 10V
C50	1-123-828-00	CAP,ELECT,NONPOLAR 1 50V
C53,56	1-123-839-00	CAP,ELECT 1000 16V
C28,32,84	1-123-880-11	CAP,ELECT,NONPOLAR 47 16V
CV1,2,3	1-141-240-00	CAP,TRIMMER 20PF
CV4	1-141-260-00	CAP,TRIMMER 60PF
C1,2,4,5,6,7,11,13,15, 16,20,22,24,26,31,33, 34,36,37,38,39,40,46, 47,49,58,59,63,64,67 72,80,81,83,85,86,87, 89,90,95,96,98,101, 103,105,107,110,112, 113,115,116,117,118, 119,120,121,123,126, 129,130,140,141,144, 146	1-161-051-00	CAP,CERAMIC 0.01 10% 50V

Ref.No. or Q'ty	Part No.	Description
(MD-14 BOARD,CARD RACK)		
C502,503	1-161-055-00	CAP,CERAMIC 0.022 10% 50V
C52,55,148	1-161-057-00	CAP,CERAMIC 0.033 10% 50V
C61,68	1-161-483-00	CAP,CERAMIC 0.1 10% 50V
R27	1-214-106-00	RES,METAL 82 1% 1/4W
R201	1-214-117-00	RES,METAL 240 1% 1/4W
R29	1-214-130-00	RES,METAL 820 1% 1/4W
R402	1-214-133-00	RES,METAL 1.1K 1% 1/4W
R49,61	1-214-137-00	RES,METAL 1.6K 1% 1/4W
R28	1-214-140-00	RES,METAL 2.2K 1% 1/4W
R145	1-214-141-00	RES,METAL 2.4K 1% 1/4W
R243	1-214-164-00	RES,METAL 22K 1% 1/4W
R401	1-214-177-00	RES,METAL 75K 1% 1/4W
R19,20	1-214-835-00	RES,METAL 62 1% 1/2W
R301,302	1-215-437-00	RES,METAL 4.7K 1% 1/4W
RV9,17	1-224-934-00	RES,VAR,METAL 100
RV20	1-224-935-00	RES,VAR,METAL 200
RV11,19	1-224-937-00	RES,VAR,METAL 1K
RV12	1-224-938-00	RES,VAR,METAL 2K
RV14,15	1-224-940-00	RES,VAR,METAL 10K
RV23	1-224-942-00	RES,VAR,METAL 50K
RV1	1-224-978-00	RES,VAR,METAL 50
RV10,18	1-230-739-11	RES,VAR,CARBON 1K
RV4	1-230-838-11	RES,VAR,METAL 200
RV7	1-230-839-11	RES,VAR,METAL 500
RV5	1-230-840-11	RES,VAR,METAL 1K
RV2,6,13,21	1-230-842-11	RES,VAR,METAL 5K
RV3,22	1-230-843-11	RES,VAR,METAL 10K
FL1	1-235-104-00	FILTER,LOW-PASS 7.5MHz
R110,120,200,211	1-247-783-00	RES,CARBON 10 5% 1/6W
R403	1-247-787-00	RES,CARBON 15 5% 1/6W
R257	1-247-790-00	RES,CARBON 20 5% 1/6W

Ref.No. or Q'ty	Part No.	Description
(MD-14 BOARD,CARD RACK)		
R57,99,100	1-247-791-00	RES,CARBON 22 5% 1/6W
R104,195	1-247-795-00	RES,CARBON 33 5% 1/6W
R123,216	1-247-799-00	RES,CARBON 47 5% 1/6W
R194,253	1-247-800-00	RES,CARBON 51 5% 1/6W
R1,6,35,84,112	1-247-804-00	RES,CARBON 75 5% 1/6W
R2,3,4,5,8,10,11,18,30, 31,32,38,45,54,56,58, 63,64,65,67,68,75,85, 90,103,105,106,107,108, 109, 112,117,135,136, 154,175,196,197,198, 199,203,205,208,212, 230,232,250	1-247-807-00	RES,CARBON 100 5% 1/6W
R127,129,530	1-247-809-00	RES,CARBON 120 5% 1/6W
R34,207	1-247-811-00	RES,CARBON 150 5% 1/6W
R16,32,95,251,514	1-247-814-00	RES,CARBON 200 5% 1/6W
R66,121	1-247-817-00	RES,CARBON 270 5% 1/6W
R15,33,96,111,184,185, 224,225	1-247-818-00	RES,CARBON 300 5% 1/6W
R41,52,53,59,60	1-247-819-00	RES,CARBON 330 5% 1/6W
R7,17	1-247-820-00	RES,CARBON 360 5% 1/6W
R131,146,188,223	1-247-821-00	RES,CARBON 390 5% 1/6W
R122,213	1-247-822-00	RES,CARBON 430 5% 1/6W
R124,134	1-247-824-00	RES,CARBON 510 5% 1/6W
R39,46	1-247-825-00	RES,CARBON 560 5% 1/6W
R87,113,125,126,148,149, 150,151,204,217,218, 219,220,221,255	1-247-829-00	RES,CARBON 820 5% 1/6W

Ref.No. or Q'ty	Part No.	Description
(MD-14 BOARD,CARD RACK)		
R9,25,55,79,80,88,93,94, 114,137,141,166,169, 170,190,192,202,209, 215,254,501	1-247-831-00	RES,CARBON 1K 5% 1/6W
R130,147,229	1-247-832-00	RES,CARBON 1.1K 5% 1/6W
R89,128	1-247-833-00	RES,CARBON 1.2K 5% 1/6W
R50,81,155,179	1-247-835-00	RES,CARBON 1.5K 5% 1/6W
R44,51,62,91,132,222	1-247-836-00	RES,CARBON 1.6K 5% 1/6W
R97,98,115,143,180,206, 237	1-247-838-00	RES,CARBON 2K 5% 1/6W
R72,78,214	1-247-839-00	RES,CARBON 2.2K 5% 1/6W
R189,191	1-247-840-00	RES,CARBON 2.4K 5% 1/6W
R193	1-247-841-00	RES,CARBON 2.7K 5% 1/6W
R158,162,177,178	1-247-842-00	RES,CARBON 3K 5% 1/6W
R26,83,92	1-247-843-00	RES,CARBON 3.3K 5% 1/6W
R22	1-247-844-00	RES,CARBON 3.6K 5% 1/6W
R42,246	1-247-845-00	RES,CARBON 3.9K 5% 1/6W
R14	1-247-847-00	RES,CARBON 4.7K 5% 1/6W
R40,171,174,181,245	1-247-848-00	RES,CARBON 5.1K 5% 1/6W
R101,102	1-247-850-00	RES,CARBON 6.2K 5% 1/6W
R236	1-247-852-00	RES,CARBON 7.5K 5% 1/6W
R37	1-247-853-00	RES,CARBON 8.2K 5% 1/6W

Ref.No. or Q'ty	Part No.	Description
(MD-14 BOARD,CARD RACK)		
R36,47,48,70,73,74,76, 77,86,142,144,156,159, 161,163,165,168,173, 176,182,186,187,226, 231,240,241,242,247, 248,249,256,502	1-247-855-00	RES,CARBON 10K 5% 1/6W
R244	1-247-858-00	RES,CARBON 13K 5% 1/6W
R13,21,23,43,69,71	1-247-859-00	RES,CARBON 15K 5% 1/6W
R227,228	1-247-862-00	RES,CARBON 20K 5% 1/6W
R133,233	1-247-863-00	RES,CARBON 22K 5% 1/6W
R153,183,252	1-247-866-00	RES,CARBON 30K 5% 1/6W
R12	1-247-872-00	RES,CARBON 51K 5% 1/6W
R167	1-247-876-00	RES,CARBON 75K 5% 1/6W
R24,82,160,164,235,238, 239	1-247-879-00	RES,CARBON 100K 5% 1/6W
R138,139,140,157,172, 505	1-247-903-00	RES,CARBON 1M 5% 1/6W
R531	1-249-415-11	RES,CARBON 680 5% 1/6W
R532	1-249-420-11	RES,CARBON 1.8K 5% 1/6W
L13,14	1-407-159-XX	INDUCTOR,MICRO,15 5%
L12	1-407-162-XX	INDUCTOR,MICRO,27 5%
L10	1-407-166-XX	INDUCTOR,MICRO,56 5%
L7	1-407-169-XX	INDUCTOR,MICRO,100 5%
L8,9	1-407-186-XX	INDUCTOR,MICRO,4.7 5%
L1,2,3,4,11	1-408-421-00	INDUCTOR,MICRO,100 5%
L5,6,15	1-421-370-00	COIL,CHOKE
X1	1-527-933-00	CRYSTAL,7.682MHz
FB1,2,3,4,5,6,7,8,9,10, 11,12,13,14	1-535-178-00	FERRITE BEAD
S1	1-553-440-00	SWITCH,TOGGLE
JP1,4,5	1-563-859-11	RECEPTACLE, CONNECTOR 2P

Ref.No. or Q'ty	Part No.	Description
(MD-14 BOARD,CARD RACK)		
JP1,2,3,4,5,6	1-566-385-11	PIN,CONNECTOR 2P
TH1	1-800-200-00	THERMISTOR,S-3K
TP1,2,3,4,5,6,7,8,9,10	() 3-657-703-01	TERMINAL,TP
TPE1,2,3,4,5	() 3-673-805-11	TERMINAL,TP
1pc	() 3-673-865-00	LEVER,WITH PIN
1pc	() 3-673-867-00	PLATE,INDICATION, PC BOARD
1pc	() 3-674-615-00	LABEL(MD-14),PC BOARD
1pc	() 3-693-055-01	LABEL NS (MD-14),PC BOARD
4pcs	7-621-981-15	SCREW,PSW 2.6x6
2pcs	() 7-626-317-21	PIN,SPRING 2.5x8
D31,32,33,34,35,36	8-719-101-97	DIODE 1SS97-1
D1	8-719-111-07	DIODE RD11E-B
D4	8-719-143-07	DIODE RD4.3E-B
D11	8-719-168-07	DIODE RD6.8E-B
D2,5,6,12,14,15,17,18, 19,20,501	8-719-815-55	DIODE 1S1555
D7,8,9,10	8-719-815-59	DIODE 1S1555-S
D3,13,16	8-719-815-80	DIODE 1S1587
Q1,2,7,11,12,13,19	8-729-110-53	TRANSISTOR 2SA1005
Q3,4,22,24	8-729-117-33	TRANSISTOR 2SC1733
Q5,6	8-729-177-43	TRANSISTOR 2SD774
Q17,21	8-729-606-32	TRANSISTOR 2SC2603
Q14,16	8-729-697-92	TRANSISTOR 2SA979
IC5,12,25	8-743-931-10	IC BX3931A

Ref.No. or Q'ty	Part No.	Description
(MD-14 BOARD,CARD RACK)		
IC27	8-759-001-16	IC MC10116L,ECL
IC13	8-759-001-98	IC MC10198L
IC3	8-759-014-96	IC MC1496P
IC10	8-759-015-95	IC MC1595L
IC9	8-759-270-69	IC TA7069P
IC16	8-759-301-05	IC HD10105,ECL
IC26	8-759-301-17	IC HD10117,ECL
IC1	8-759-301-31	IC HD10131,ECL
IC30	8-759-900-00	IC SN74LS00N,TTL
IC33	8-759-900-02	IC SN74LS02N,TTL
IC21	8-759-900-04	IC SN74LS04N,TTL
IC31	8-759-900-10	IC SN74LS10N,TTL
IC36	8-759-901-23	IC SN74LS123N,TTL
IC28,29,34,35,37	8-759-902-21	IC SN74LS221N,TTL
IC14,23,32	8-759-906-07	IC TL607CP
IC2	8-759-906-85	IC AM685DL
IC19	8-759-951-07	IC SN75107AN
IC6,7	8-759-957-09	IC FT5709M
IC4,22	8-759-990-82	IC TL082CP
IC15,17,18,20,38	8-759-990-84	IC TL084CN
Q20	8-761-622-00	TRANSISTOR 2SC1636
Q8,9,10,18,23,25	8-765-300-00	TRANSISTOR 2SC2009
Q15	8-769-192-00	TRANSISTOR 2SK43-2

Ref.No. or Q'ty	Part No.	Description
LG-02(A) BOARD (BVH-2000PS,2180PS/CARD RACK)		
1pc	() A-6017-103-A	COMPLETE PCB,LG-02(A)
	() A-6017-122-A	COMPLETE PCB,LG-02(A) (For BVH-2000PS 10,12, 14 model)
(This assembly includes the following parts.)		
C36	1-102-114-00	CAP,CERAMIC 470PF 10% 50V
C4	1-107-164-00	CAP,MICA 51PF 5% 500V
C6,33,34	1-108-555-00	CAP,MYLAR 0.001 5% 50V
C38	1-108-587-00	CAP,MYLAR 0.022 5% 50V
C1,2,20,27	1-123-330-00	CAP,ELECT 22 25V
C5	1-123-380-00	CAP,ELECT 1 100V
C37	1-123-616-00	CAP,ELECT 4.7 25V
C3,7,8,9,10,11,12,13,14, 15,16,17,18,19,35	1-161-055-00	CAP,CERAMIC 0.022 10% 50V
R12,15	1-214-118-00	RES,METAL 270 1% 1/4W
R42	1-215-456-00	RES,METAL 30K 1% 1/6W
RB1,2,3,4,5,6,7,8,9	1-231-410-00	RES BLOCK,10Kx8
R2,3,5,6,13,38	1-247-783-00	RES,CARBON 10 5% 1/6W
R39	1-247-819-00	RES,CARBON 330 5% 1/6W
R27,36,37	1-247-829-00	RES,CARBON 820 5% 1/6W
R19	1-247-831-00	RES,CARBON 1K 5% 1/6W
R16	1-247-838-00	RES,CARBON 2K 5% 1/6W
R17	1-247-842-00	RES,CARBON 3K 5% 1/6W
R9,10,11,18,20,21,22,23, 24,25,26,28,29,30,31, 32,33,34,35,40	1-247-855-00	RES,CARBON 10K 5% 1/6W
L1	1-421-370-00	COIL,CHOKE
S1	1-516-923-21	SWITCH,DIP,4-CKT
S2	1-516-925-21	SWITCH,DIP,8-CKT
S3	1-553-440-00	SWITCH,TOGGLE

Ref.No. or Q'ty	Part No.	Description
(LG-02(A) BOARD,CARD RACK)		
S4	1-553-441-21	SWITCH,TOGGLE
2pcs	1-563-859-11	RECEPTACLE,CONNECTOR 2P
JP1,2,3,4,5,6,7,8,9	1-566-385-11	PIN,CONNECTOR 2P
TP1,2,3,4,5,6,7,8,9,10, 11,12	() 3-657-703-01	TERMINAL,TP
TPE1,2,3	() 3-673-805-11	TERMINAL,TP
1pc	() 3-673-865-00	LEVER,WITH PIN
1pc	() 3-673-867-00	PLATE,INDICATION, PC BOARD
1pc	() 3-674-627-11	LABEL(LG-02A),PC BOARD
1pc	() 3-693-052-01	LABEL PS-NS (LG-02A),PC BOARI
4pcs	4-866-397-00	CUSHION,LED
1pc	7-621-981-15	SCREW,PSW 2.6x6
2pcs	() 7-626-317-21	PIN,SPRING 2.5x8
D1,2,3,4,5,6,7,8	8-719-911-06	DIODE 1SS106
D11	8-719-930-33	LED,GL3PR3,RED
D9	8-719-930-53	LED,GL3HY3,YEL
IC2G	8-759-040-46	IC MC14046BCP,CMOS
IC3I	8-759-645-17	IC M54517P
IC4F	8-759-756-27	IC,PROM,MB7051-L2A1
IC4E	8-759-761-39	IC,PROM,MB7051-L1A2
IC2H,3L,4I,5A,5E	8-759-900-00	IC SN74LS00N,TTL
IC2A,2B,2L,2M,3M,4L,4M, 5D,5L,5M	8-759-900-04	IC SN74LS04N,TTL
IC1A,2K,5C	8-759-900-08	IC SN74LS08N,TTL
IC3H	8-759-900-11	IC SN74LS11N,TTL
IC4H,5G,5I	8-759-900-32	IC SN74LS32N,TTL

Ref.No. or Q'ty	Part No.	Description
(LG-02(A) BOARD,CARD RACK)		
IC3B,3C,3D,3E,3F,3G,5B, 5F	8-759-900-74	IC SN74LS74AN,TTL
IC5H	8-759-900-86	IC SN74LS86N,TTL
IC1C	8-759-901-23	IC SN74LS123N,TTL
IC1K,1L	8-759-901-38	IC SN74LS138N,TTL
IC2C,2D	8-759-901-61	IC SN74LS161AN,TTL
IC2J,3J,4J,5J	8-759-901-74	IC SN74LS174N,TTL
IC1E,4B,4C,4D	8-759-901-91	IC SN74LS191N,TTL
IC1F,1G,1I	8-759-902-40	IC SN74LS240N,TTL
IC1J	8-759-902-44	IC SN74LS244N,TTL
IC3K,4G,4K,5K	8-759-902-73	IC SN74LS273N,TTL
IC2E,3A	8-759-903-93	IC SN74LS393N,TTL
IC2F	8-759-906-24	IC SN74LS624N,TTL

SY-79 BOARD (BVH-2000PS,2180PS/CARD RACK)

1pc (for 02/04/12/14 model)		
()	A-6017-090-A	COMPLETE PCB,SY-79
1pc (for 00/10 model)		
()	A-6017-096-A	COMPLETE PCB,SY-79
(These ass'ies include the following parts.)		
1pc ()	X-3673-641-0	PLATE ASSY,SHIELD
C59	1-102-115-00	CAP,CERAMIC 560PF 10% 50V
C62,63,64,65,66,67,68, 69	1-107-026-00	CAP,MICA 5.1PF +/-0.5PF 500V
C40	1-107-085-00	CAP,MICA 100PF 5% 50V

Ref.No. or Q'ty	Part No.	Description
(SY-79 BOARD,CARD RACK)		
C57,60	1-107-209-00	CAP,MICA 20PF 5% 500V
C47,58	1-108-555-00	CAP,MYLAR 0.001 5% 50V
C31	1-123-307-00	CAP,ELECT 100 10V
C16,21,25,28,29	1-123-330-00	CAP,ELECT 22 25V
C48,49,52,56	1-123-380-00	CAP,ELECT 1 100V
C42	1-124-255-00	CAP,ELECT 1 20% 50V
C1,2,4,6,7,8,10,12,22, 34,36,38,44,46,50,55, 61	1-161-055-00	CAP,CERAMIC 0.022 10% 50V
RB1,2,3,5,6,7,8,9,28,29	1-231-410-00	RES BLOCK,10Kx8
RB26,27	1-231-533-00	RES BLOCK,10Kx4
CP1,2,3	1-235-106-00	CR PACK
R5,16	1-247-791-00	RES,CARBON 22 5% 1/6W
R4,23	1-247-814-00	RES,CARBON 200 5% 1/6W
R8,15,22	1-247-829-00	RES,CARBON 820 5% 1/6W
R9,10	1-247-831-00	RES,CARBON 1K 5% 1/6W
R3	1-247-838-00	RES,CARBON 2K 5% 1/6W
R1,2,6,7,12,13,14,17,18, 19,20,21,24,25	1-247-855-00	RES,CARBON 10K 5% 1/6W
L1	1-409-339-00	COIL,SN
S9	1-516-925-21	SWITCH,DIP,8-CKT
X1	1-527-827-00	CRYSTAL,4.9152MHz
S3	1-552-539-00	SWITCH,PUSH
S1,2	1-553-252-00	SWITCH,ROTARY
S6	1-553-440-00	SWITCH,TOGGLE
S4,5	1-553-441-00	SWITCH,TOGGLE
S7,8,10,11	1-553-925-00	SWITCH,ROTARY
S12 (for 00 model)	1-554-329-00	SWITCH,TOGGLE
3pcs	1-565-413-11	RECEPTACLE,CONNECTOR 2P

Ref.No. or Q'ty	Part No.	Description
(SY-79 BOARD,CARD RACK)		
JP1,2,3,4,5,6	1-566-385-11	PIN,CONNECTOR 2P
TP1,2,3,4,5,6,7,8,9,10	() 3-673-805-01	TERMINAL,TP
TPE1,2,3	() 3-673-805-11	TERMINAL,TP
1pc	() 3-673-865-00	LEVER,WITH PIN
1pc	() 3-673-867-00	PLATE,INDICATION, PC BOARD
1pc (for 02/04 model)	() 3-674-617-00	LABEL(SY-79),PC BOARD
1pc (for 00 model)	() 3-674-684-00	LABEL(SY-79),PC BOARD
2pcs	4-866-397-00	CUSHION,LED
4pcs	7-621-981-15	SCREW,PSW2.6x6
2pcs	() 7-626-317-21	PIN,SPRING 2.5x8
ND1	8-719-901-68	LED,7-SEGMENT, GL-6R202,RED
D1,3	8-719-911-06	DIODE 1SS106
Q1	8-729-110-53	TRANSISTOR 2SA1005
IC5A,6A	8-759-044-95	IC MC14495P,CMOS
IC5M,5N	8-759-045-84	IC MC14584BCP,CMOS
IC4M	8-759-240-53	IC TC4053BP,CMOS
IC6K,6L,6M,6N	8-759-645-16	IC M54516P
IC1H	8-759-772-27	IC,EPROM,2732-72U3-5
IC1I	8-759-772-33	IC,EPROM,2732-71A3-5
IC1G	8-759-772-28	IC,EPROM,2732-73U3-5
IC1E	8-759-772-29	IC,EPROM,2732-74U3-5
IC1D	8-759-772-30	IC,EPROM,2732-75U3-5
IC1A	8-759-772-32	IC,EPROM,2732-77U3-5
IC1K	8-759-778-55	IC,EPROM,2732-70U3-6
IC1C	8-759-778-56	IC,EPROM,2732-76U3-6
IC3P,4N	8-759-900-00	IC SN74LS00N,TTL
IC2L,3Q	8-759-900-04	IC SN74LS04N,TTL
IC3M	8-759-900-08	IC SN74LS08N,TTL
IC3L	8-759-900-14	IC SN74LS14N,TTL

Ref.No. or Q'ty	Part No.	Description
(SY-79 BOARD,CARD RACK)		
IC4D	8-759-900-20	IC SN74LS20N,TTL
IC3O,5F,6F	8-759-900-32	IC SN74LS32N,TTL
IC2D,2E	8-759-901-28	IC MSM5128-12RS,CMOS
IC4E,4F,6E	8-759-901-38	IC SN74LS138N,TTL
IC5E	8-759-901-39	IC SN74LS139N,TTL
IC2A,2B,2C,4B,5I	8-759-902-40	IC SN74LS240N,TTL
IC1L,1O,1P,5K,5L	8-759-902-44	IC SN74LS244N,TTL
IC2O,2P	8-759-902-45	IC SN74LS245N,TTL
IC4A,5J,6I,6J	8-759-902-73	IC SN74LS273N,TTL
IC3N	8-759-903-65	IC SN74LS365AN,TTL
IC2K	8-759-903-93	IC SN74LS393N,TTL
IC1M	8-759-916-80	IC LH0080A,NMOS
IC2H	8-759-916-82	IC LH0082A,NMOS
IC2I	8-759-916-84	IC LH0084A,NMOS
IC4O,4P	8-759-926-30	IC AM26LS30PC
IC4Q	8-759-926-32	IC AM26LS32PC

SY-80 BOARD (BVH-2000PS,2180PS/CARD RACK)

Ref.No. or Q'ty		Part No.	Description
1pc	()	A-6017-091-A	COMPLETE PCB,SY-80
(This assembly includes the following parts.)			
1pc	()	X-3673-641-0	PLATE ASSY,SHIELD
C47		1-102-115-00	CAP,CERAMIC 560PF 10% 50V
C27		1-107-085-00	CAP,MICA 100PF 5% 50V
C48,49,51		1-107-209-00	CAP,MICA 20PF 5% 500V
C25,43		1-108-555-00	CAP,MYLAR 0.001 5% 50V
C45,46		1-108-561-00	CAP,MYLAR 0.0018 5% 50V
C1		1-123-307-00	CAP,ELECT 100 10V
C2,28,30,36,39		1-123-330-00	CAP,ELECT 22 25V
C22,29		1-123-380-00	CAP,ELECT 1 100V
C44		1-161-043-00	CAP,CERAMIC 0.0022 10% 50V
C3,5,7,11,14,16,19,23, 24,50		1-161-055-00	CAP,CERAMIC 0.022 10% 50V
RB2		1-231-407-00	RES BLOCK,2.2Kx8
RB1,3,4,5,6,7,8,9		1-231-410-00	RES BLOCK,10Kx8
R14,18		1-247-791-00	RES,CARBON 22 5% 1/6W
R13,22,23		1-247-814-00	RES,CARBON 200 5% 1/6W
R17,20,21		1-247-829-00	RES,CARBON 820 5% 1/6W
R10,11		1-247-831-00	RES,CARBON 1K 5% 1/6W
R4,5,12		1-247-838-00	RES,CARBON 2K 5% 1/6W
R1,2,3,6,7,8,15,16,19		1-247-855-00	RES,CARBON 10K 5% 1/6W

Ref.No. or Q'ty		Part No.	Description
(SY-80 BOARD,CARD RACK)			
L1		1-409-339-00	COIL,SN
S8,9		1-516-925-21	SWITCH,DIP,8-CKT
X1		1-527-827-00	CRYSTAL,4.9152MHz
S3,4		1-552-539-00	SWITCH,PUSH
S1,2		1-553-252-00	SWITCH,ROTARY
S6		1-553-440-00	SWITCH,TOGGLE
S5		1-553-441-00	SWITCH,TOGGLE
TP1,2,3,4,5,6,7,8	()	3-673-805-01	TERMINAL,TP
TPE1,2,3	()	3-673-805-11	TERMINAL,TP
1pc	()	3-673-865-00	LEVER,WITH PIN
1pc	()	3-673-867-00	PLATE,INDICATION, PC BOARD
1pc	()	3-674-624-00	LABEL(SY-80),PC BOARD
2pcs		3-621-124-01	SPASER
4pcs		7-621-981-15	SCREW,PSW 2.6x6
2pcs	()	7-626-317-21	PIN,SPRING 2.5x8
D3,4,5,6,7		8-719-815-55	DIODE 1S1555
ND1		8-719-901-68	LED,7-SEGMENT, GL-6R202,RED
D1,2		8-719-911-06	DIODE 1SS106
Q1		8-729-110-53	TRANSISTOR 2SA1005
IC5A,5B		8-759-044-95	IC MC14495P,CMOS
IC1I		8-759-240-71	IC TC4071BP,CMOS
IC1D		8-759-772-36	IC,EPROM,2732-81U3-6
IC1C		8-759-772-37	IC,EPROM,2732-82U3-5
IC1F		8-759-776-20	IC,EPROM,2732-80U3-6
IC1G,3G,4L		8-759-900-00	IC SN74LS00N,TTL
IC2G,4H,4I,5E,5K,5L,5M		8-759-900-04	IC SN74LS04N,TTL

Ref.No. or Q'ty	Part No.	Description
(SY-80 BOARD,CARD RACK)		
IC1H,3L	8-759-900-08	IC SN74LS08N,TTL
IC3M,4M	8-759-900-14	IC SN74LS14N,TTL
IC3E	8-759-900-20	IC SN74LS20N,TTL
IC2F,4J	8-759-900-32	IC SN74LS32N,TTL
IC3H,4E	8-759-900-74	IC SN74LS74AN,TTL
IC1B,1J	8-759-901-28	IC MSM5128-12RS,CMOS
IC2D,2E,3F,4F	8-759-901-38	IC SN74LS138N,TTL
IC5F	8-759-901-39	IC SN74LS139N,TTL
IC4C	8-759-901-51	IC SN74LS151N,TTL
IC1K,1L,1M	8-759-901-57	IC SN74LS157N,TTL
IC1A,2B,3B,4B	8-759-902-40	IC SN74LS240N,TTL
IC2H,2J,2N	8-759-902-44	IC SN74LS244N,TTL
IC2K,2L,2M	8-759-902-45	IC SN74LS245N,TTL
IC5G,5H,5I,5J	8-759-902-73	IC SN74LS273N,TTL
IC4D	8-759-902-80	IC SN74LS280N,TTL
IC3J	8-759-903-65	IC SN74LS365AN,TTL
IC2I	8-759-916-80	IC LH0080A,NMOS
IC3K	8-759-916-82	IC LH0082A,NMOS

Ref.No. or Q'ty	Part No.	Description
SV-43 BOARD (BVH-2000PS,2180PS/CARD RACK)		
1pc (for BVH-2000PS)		
	() A-6015-066-A	COMPLETE PCB,SV-43
1pc (for BVH-2180PS)		
	() A-6015-088-A	COMPLETE PCB,SV-43
(These ass'ies includes the following parts.)		
1pc	() X-3673-641-0	PLATE ASSY,SHIELD
C32,34,37,39,41	1-102-106-00	CAP,CERAMIC 100PF 10% 50V
C101	1-107-202-00	CAP,MICA 10PF 5% 500V
C15,16,17,18,19,20,21, 26	1-123-822-00	CAP,ELECT 47 10V
C27	1-124-141-00	CAP,ELECT 330 10V
C30,31	1-130-491-00	CAP,MYLAR 0.047 5% 50V
C42	1-131-381-00	CAP,TANT 47 10% 10V
C40	1-161-051-00	CAP,CERAMIC 0.01 10% 50V
C1,2,3,4,5,6,7,8,9,10, 11,12,13,14,22,23,24, 25,28,29,33,35,38	1-161-055-00	CAP,CERAMIC 0.022 10% 50V
RB1	1-231-385-00	RES BLOCK,4.7Kx8
RB2,3,4,5	1-235-109-00	RES BLOCK,22Kx8
R2,3,6,7,10,11,32,46,47	1-247-783-00	RES,CARBON 10 5% 1/6W
R41,44	1-247-790-00	RES,CARBON 20 5% 1/6W
R34,35	1-247-807-00	RES,CARBON 100 5% 1/6W
R105	1-247-811-00	RES,CARBON 150 5% 1/6W
R42	1-247-814-00	RES,CARBON 200 5% 1/6W
R26	1-247-823-00	RES,CARBON 470 5% 1/6W
R39,40	1-247-829-00	RES,CARBON 820 5% 1/6W

Ref.No. or Q'ty		Part No.	Description
(SV-43 BOARD,CARD RACK)			
R43		1-247-831-00	RES,CARBON 1K 5% 1/6W
R31		1-247-839-00	RES,CARBON 2.2K 5% 1/6W
R25,27,28,29,33		1-247-847-00	RES,CARBON 4.7K 5% 1/6W
R20,21,22,23,24,38		1-247-855-00	RES,CARBON 10K 5% 1/6W
(for BVH-2180PS)			
R101,102		1-247-855-00	RES,CARBON 10K 5% 1/6W
R13,14,15,18,19,30,36, 37		1-247-863-00	RES,CARBON 22K 5% 1/6W
(for BVH-2180)			
R103,104		1-247-863-00	RES,CARBON 22K 5% 1/6W
R16,17		1-247-879-00	RES,CARBON 100K 5% 1/6W
L1		1-408-417-00	INDUCTOR,MICRO,47 5%
L2		1-409-339-00	COIL,SN
S1		1-516-923-21	SWITCH,DIP,4-CKT
X1		1-527-936-00	CRYSTAL,10MHz
S2		1-553-441-00	SWITCH,TOGGLE
CN1M	()	1-560-760-00	RECEP,40P,MALE
TP1,2,3,4,5,6,7,8,9,10, 11,12,13,14	()	3-673-805-01	TERMINAL,TP
TPE1,2,3,4	()	3-673-805-11	TERMINAL,TP
1pc	()	3-673-865-00	LEVER,WITH PIN
1pc	()	3-673-867-00	PLATE,INDICATION, PC BOARD
1pc	()	3-674-619-00	LABEL(SV-43),PC BOARD
2pcs		4-866-397-01	CUSHION,LED
4pcs		7-621-981-15	SCREW,PSW 2.6x6
2pcs	()	7-626-317-21	PIN,SPRING 2.5x8
D1,3,4,5		8-719-815-55	DIODE 1S1555
ND1		8-719-901-68	LED,7-SEGMENT, GL-6R202,RED
D2		8-719-911-06	DIODE 1SS106
Q4		8-729-110-53	TRANSISTOR 2SA1005
Q1,2		8-729-117-54	TRANSISTOR 2SA1175

Ref.No. or Q'ty	Part No.	Description
(SV-43 BOARD,CARD RACK)		
Q3	8-729-606-32	TRANSISTOR 2SC2603
IC5C	8-759-044-95	IC MC14495P,CMOS
IC2N	8-759-045-38	IC MC14538BCP,CMOS
IC1R	8-759-240-49	IC TC4049BP,CMOS
IC1P,1Q,5I,6O	8-759-241-74	IC TC40174BP,CMOS
IC1N	8-759-245-20	IC TC4520BP,CMOS
IC2P,2Q,4I,6N	8-759-345-03	IC HD14503BP,CMOS
(for BVH-2180PS)		
IC6D	8-759-345-03	IC HD14503BP,CMOS
(for BVH-2000PS)		
IC1F	8-759-758-95	IC,EPROM,MBM2732-S2U3
IC1I	8-759-758-97	IC,EPROM,MBM2732-S4U3
IC6K	8-759-761-26	IC,EPROM,MBM2732-S8U3-2
IC1E	8-759-769-76	IC,EPROM,MBM2732-S1U3-9
IC1H	8-759-764-06	IC,EPROM,MBM2732-S3U3-6
IC6I	8-759-765-47	IC,EPROM,MBM2732-S7U3-8
(for BVH-2180PS)		
IC1F	8-759-764-32	IC,EPROM,MBM2732-S2Q1
IC1I	8-759-764-34	IC,EPROM,MBM2732-S4Q1
IC6I	8-759-765-48	IC,EPROM,MBM2732-S7Q1-2
IC6K	8-759-764-36	IC,EPROM,MBM2732-S8Q1
IC1E	8-759-769-77	IC,EPROM,MBM2732-S1Q1-3
IC1H	8-759-764-33	IC,EPROM,MBM2732-S3Q1
IC5H,5O	8-759-900-00	IC SN74LS00N,TTL
IC4G,5P	8-759-900-02	IC SN74LS02N,TTL
IC4D	8-759-900-03	IC SN74LS03N,TTL
IC2R,3O,4F,6C	8-759-900-04	IC SN74LS04N,TTL
IC4H,4N	8-759-900-08	IC SN74LS08N,TTL
IC3H,5F	8-759-900-10	IC SN74LS10N,TTL
IC4E	8-759-900-30	IC SN74LS30N,TTL
IC3G,3I,4O,5E,5N	8-759-900-32	IC SN74LS32N,TTL
IC4M,5D,5G	8-759-900-74	IC SN74LS74AN,TTL
IC6F	8-759-901-07	IC SN74LS107AN,TTL
IC1M,6M	8-759-901-28	IC MSM5128-12RS,CMOS
IC1O,3E	8-759-901-38	IC SN74LS138N,TTL

Ref.No. or Q'ty	Part No.	Description
(SV-43 BOARD,CARD RACK)		
IC20,3D,3F,3N,5M		
	8-759-901-39	IC SN74LS139N,TTL
IC3J,3K,3R,4C,4J,4R,5Q		
	8-759-902-44	IC SN74LS244N,TTL
IC1D,4K,6P		
	8-759-902-45	IC SN74LS245N,TTL
IC3P,3Q,4P,4Q		
	8-759-906-70	IC SN74LS670N,TTL
IC6H	8-759-910-04	IC SN74S04N,TTL
IC2B,3L	8-759-916-80	IC LH0080A,NMOS

Ref.No. or Q'ty	Part No.	Description
RL-12 BOARD (BVH-2000PS,2180PS/CARD RACK)		
1pc (for BVH-2000PS)		
	() A-6015-067-C	COMPLETE PCB,RL-12
1pc (for BVH-2180PS)		
	() A-6015-089-A	COMPLETE PCB,RL-12
(These ass'ies includes the following parts.)		
1pc	() X-3673-641-0	PLATE ASSY,SHIELD
C113,114	1-102-106-00	CAP,CERAMIC 100PF 10% 50V
C120,121	1-102-112-00	CAP,CERAMIC 330PF 10% 50V
C31,32,33,34,35,42	1-102-114-00	CAP,CERAMIC 470PF 10% 50V
C116	1-107-202-00	CAP,MICA 10PF 5% 500V
C111	1-108-566-00	CAP,MYLAR 0.003 5% 50V
C21	1-123-611-00	CAP,ELECT 1 50V
C2,3,16,19,26,28,48,86, 88	1-123-821-00	CAP,ELECT 47 16V
C102	1-124-141-00	CAP,ELECT 330 10V
C11,47,51,53,60,61,62, 80,81,90,93,94,96,101	1-124-236-00	CAP,ELECT 47 16V
C46,68	1-124-240-00	CAP,ELECT 10 25V
C38,39	1-124-656-00	CAP,ELECT NONPOLAR 2.2 50V
C115	1-130-483-00	CAP,MYLAR 0.01 5% 50V
C112	1-130-484-00	CAP,MYLAR 0.012 5% 50V
C106,110	1-130-485-00	CAP,MYLAR 0.015 5% 50V
(for BVH-2000PS)		
C108	1-130-485-00	CAP,MYLAR 0.015 5% 50V
(for BVH-2180PS)		
C108	1-130-486-00	CAP,MYLAR 0.018 5% 50V
C105	1-130-489-00	CAP,MYLAR 0.033 5% 50V
(for BVH-2000PS)		
C107	1-130-489-00	CAP,MYLAR 0.033 5% 50V
(for BVH-2180PS)		
C107	1-130-490-00	CAP,MYLAR 0.039 5% 50V
C40	1-130-495-00	CAP,MYLAR 0.1 5% 50V
(for BVH-2000PS)		
C41	1-130-495-00	CAP,MYLAR 0.1 5% 50V
C56,57,58,59,67,69	1-131-369-00	CAP,TANT 4.7 10% 16V

Ref.No. or Q'ty	Part No.	Description
(RL-12 BOARD,CARD RACK)		
C17,20,22,23,25,30,44	1-161-047-00	CAP,CERAMIC 0.0047 10% 50V
C5,6,7,8,9,10	1-161-049-00	CAP,CERAMIC 0.0068 10% 50V
C14	1-161-051-00	CAP,CERAMIC 0.01 10% 50V
(for BVH-2180PS)		
C41	1-161-897-00	CAP,CERAMIC 0.33 50V
C1,4,15,18,27,29,36,37, 45,49,50,52,54,55,70, 82,83,84,85,87,89,91, 92,95,97,100,103,104, 131,132	1-162-596-00	CAP,CERAMIC 0.022 25V
(for BVH-2000PS)		
R212	1-215-373-31	RES,METAL 10 1% 1/6W
R78	1-215-406-00	RES,METAL 240 1% 1/6W
R32,175	1-215-418-00	RES,METAL 750 1% 1/6W
R30,31,64,106	1-215-425-00	RES,METAL 1.5K 1% 1/6W
R108	1-215-428-00	RES,METAL 2K 1% 1/6W
R36,37,110	1-215-432-00	RES,METAL 3K 1% 1/6W
R184	1-215-433-00	RES,METAL 3.3K 1% 1/6W
(for BVH-2180PS)		
R212	1-215-435-00	RES,METAL 3.9K 1% 1/6W
R185	1-215-440-00	RES,METAL 6.2K 1% 1/6W
(for BVH-2180PS)		
R213	1-215-440-00	RES,METAL 6.2K 1% 1/6W
R111,113	1-215-442-00	RES,METAL 7.5K 1% 1/6W
(for BVH-2180PS)		
R187	1-215-443-00	RES,METAL 8.2K 1% 1/6W
R41,43,62,81,85,91,92, 97,99,102,143,145,148, 150,193	1-215-445-00	RES,METAL 10K 1% 1/6W
R176	1-215-446-00	RES,METAL 11K 1% 1/6W

Ref.No. or Q'ty	Part No.	Description
(RL-12 BOARD,CARD RACK)		
R77,87,153	1-215-447-00	RES,METAL 12K 1% 1/6W
(for BVH-2000PS)		
R187	1-215-448-00	RES,METAL 13K 1% 1/6W
R80,94,98,100,103,104, 115,116,117	1-215-449-00	RES,METAL 15K 1% 1/6W
R89	1-215-451-00	RES,METAL 18K 1% 1/6W
R40,42,44,45,82,90,93, 95,96,144,146,186,188, 189	1-215-452-00	RES,METAL 20K 1% 1/6W
R149,151	1-215-454-00	RES,METAL 24K 1% 1/6W
R177	1-215-468-00	RES,,METAL 91K 1% 1/6W
R58,123,124,135,141, 178,179,180,181,182,	1-215-469-00	RES,METAL 100K 1% 1/6W
(for BVH-2000PS)		
R183	1-215-469-00	RES,METAL 100K 1% 1/6W
RV10	1-224-936-00	RES,VAR,CERMET 500
RV7	1-224-937-00	RES,VAR,CERMET 1K
RV11	1-224-938-00	RES,VAR,CERMET 2K
RV1,2,3,4,5,6	1-224-939-00	RES,VAR,CERMET 5K
RV9	1-224-940-00	RES,VAR,CERMET 10K
RV12,13,15	1-224-941-00	RES,VAR,CERMET 20K
RV8,20	1-224-942-00	RES,VAR,CERMET 50K
RV14	1-230-741-21	RES,VAR,CARBON 10K
RB2	1-231-399-00	RES,BLOCK 330x8
R83,107,109	1-247-783-00	RES,CARBON 10 5% 1/6W
(for BVH-2000PS)		
R216	1-247-783-00	RES,CARBON 10 5% 1/6W

Ref.No. or Q'ty	Part No.	Description
(RL-12 BOARD,CARD RACK)		
R79,210,211	1-247-815-00	RES,CARBON 220 5% 1/6W
R15,17,21,25,28,34,173	1-247-831-00	RES,CARBON 1K 5% 1/6W
R35	1-247-835-00	RES,CARBON 1.5K 5% 1/6W
R1,2,3,4,5,6,76	1-247-839-00	RES,CARBON 2.2K 5% 1/6W
R7,9,11,13,22,23,88	1-247-842-00	RES,CARBON 3K 5% 1/6W
R49,56	1-247-843-00	RES,CARBON 3.3K 5% 1/6W
R67,84	1-247-845-00	RES,CARBON 3.9K 5% 1/6W
R169	1-247-846-00	RES,CARBON 4.3K 5% 1/6W
R8,10,12,14,26,27,197	1-247-848-00	RES,CARBON 5.1K 5% 1/6W
R196	1-247-860-00	RES,CARBON 16K 5% 1/6W
(for BVH-2180PS)		
R66	1-247-861-00	RES,CARBON 18K 5% 1/6W
R54,55,195	1-247-862-00	RES,CARBON 20K 5% 1/6W
R154,161,172	1-247-863-00	RES,CARBON 22K 5% 1/6W
(for BVH-2180PS)		
R73	1-247-873-00	RES,CARBON 56K 5% 1/6W
R194,200	1-247-877-00	RES,CARBON 82K 5% 1/6W
R46,50,51,168	1-247-879-00	RES,CARBON 100K 5% 1/6W
R57	1-247-883-00	RES,CARBON 150K 5% 1/6W
R16,18,19,20,24,29	1-247-885-00	RES,CARBON 180K 5% 1/6W
R52,53	1-247-887-00	RES,CARBON 220K 5% 1/6W
(for BVH-2180PS)		
R183	1-247-888-00	RES,CARBON 240K 5% 1/6W
R174	1-247-891-00	RES,CARBON 330K 5% 1/6W
R48,167	1-247-893-00	RES,CARBON 390K 5% 1/6W

Ref.No. or Q'ty	Part No.	Description
(RL-12 BOARD,CARD RACK)		
R72	1-247-895-00	RES,CARBON 470K 5% 1/6W
R47,112,147,152	1-247-903-00	RES,CARBON 1M 5% 1/6W
R38,39,74,75,86,114,155, 156,157,158,159,160, 164,165,170,190,191, 192,215,217	1-249-429-11	RES,CARBON 10K 5% 1/6W
(for BVH-2000PS)		
R66,73	1-249-429-11	RES,CARBON 10K 5% 1/6W
L1,2,3	1-408-417-00	INDUCTOR,MICRO 47 5%
L4,5,6	1-421-370-00	COIL,CHOKE
S1	1-553-441-00	SWITCH,TOGGLE
TP1,2,3,4,5,6,7,8,9,10, 11,12,13,14,15,16,17, 18,19,20,21	() 3-673-805-01	TERMINAL,TP
TPE1,2,3,4	() 3-673-805-11	TERMINAL,TP
1pc	() 3-673-865-00	LEVER,WITH PIN
1pc	() 3-673-867-00	PLATE,INDICATION,PC BOARD
(for BVH-2000PS)		
1pc	() 3-674-620-01	LABEL(RL-12),PC BOARD
(for BVH-2180PS)		
1pc	() 3-690-531-01	LABEL(RL-12),PC BOARD
1pc	7-621-737-08	SCREW,2.6x3
4pcs	7-621-981-15	SCREW,PSW 2.6x6
2pcs	7-626-317-21	PIN,SPRING 2.5x8
D40	8-719-156-07	DIODE RD5.6E-B
D301,302	8-719-175-07	DIODE RD7.5E
D4,5,6,7	8-719-400-25	LED,LN25RP,RED
D0,1,2,3	8-719-400-35	LED,LN35BP,GREEN
D8,9,10,11,12,13,14,15, 16,17,18,19,20,21,22, 23,24,25,26,27,28,29, 43,44,45,46,47,48	8-719-815-55	DIODE 1S1555
Q1	8-729-374-02	TRANSISTOR 2SB740
IC4	8-759-100-34	IC UPC648D
IC1,2,3	8-759-103-93	IC UPC393C

Ref. No. or Q'ty	Part No.	Description
(RL-12 BOARD, CARD RACK)		
IC18, 25, 26	8-759-135-80	IC UPC358C
IC14, 27	8-759-145-58	IC UPC4558C
IC2I, 2J, 2L	8-759-182-53	IC UPD8253C-5, NMOS
IC6, 21, 22	8-759-208-06	IC TC4051BPHB
IC23	8-759-208-08	IC TC4052BPHB
IC29	8-759-208-10	IC TC4053BPHB
IC2C, 2D, 2F, 2Q, 2R	8-759-241-74	IC TC40174BP, CMOS
IC2E, 2M, 2N, 2O, 2P	8-759-345-03	IC HD14503BP, CMOS
IC1H	8-759-766-61	IC, PROM, MB7052-R2U3
IC1E, 1P, 3F	8-759-900-00	IC SN74LS00N, TTL
IC1N, 1O, 1T, 2G, 2T	8-759-900-04	IC SN74LS04N, TTL
IC1K	8-759-900-08	IC SN74LS08N, TTL
IC3O	8-759-900-32	IC SN74LS32N, TTL
IC1J, 1M	8-759-900-74	IC SN74LS74AN, TTL
IC1D, 2S	8-759-900-86	IC SN74LS86N, TTL
IC1Q, 3P	8-759-901-07	IC SN74LS107AN, TTL
IC3M	8-759-901-38	IC SN74LS138N, TTL
IC3N	8-759-901-39	IC SN74LS139N, TTL
IC1I, 1S	8-759-901-74	IC SN74LS174N, TTL
IC1F, 1G	8-759-901-91	IC SN74LS191N, TTL
IC3G	8-759-901-97	IC SN74LS197N, TTL
IC2A	8-759-903-74	IC SN74LS374N, TTL
IC1L, 1R	8-759-903-93	IC SN74LS393N, TTL
IC17	8-759-905-13	IC BA9101
IC11, 12	8-759-906-01	IC TL601CP
IC1B, 1C	8-759-910-43	IC CX23028
IC13	8-759-910-83	IC TL072ACP
IC31	8-759-990-04	IC TL074CN
IC5, 7, 8, 9, 15, 16, 19, 28	8-759-990-82	IC TL082CP

Ref. No. or Q'ty	Part No.	Description
RS-20 BOARD (BVH-2000PS, 2180PS/CARD RACK)		
BVH-2000PS #33401-34399		
BVH-2180PS #10001-10599		
(Board No. 1-615-381-11)		
IC4F	8-759-901-91	IC SN74LS191N
IC4J	8-759-901-91	IC SN74LS191N
IC4I	8-759-763-27	IC MB7052-R2U2
CN4G	1-566-088-11	PLUG, DIL 16P
CN4H	1-566-088-11	PLUG, DIL 16P
CD-17 BOARD (BVH-2000PS, 2180PS/CARD RACK)		
Board No; 1-606-075-11, 12, 13		
1pc	() A-6015-072-B	COMPLETE PCB, CD-17
	() A-6015-096-A	COMPLETE PCB, CD-17 (For BVH-2000PS 10, 12, 14 model)
(This assembly includes the following parts.)		
1pc	() X-3673-641-0	PLATE ASSY, SHIELD
C211	1-102-106-00	CAP, CERAMIC 100PF 10% 50V
C210	1-102-113-00	CAP, CERAMIC 390PF 10% 50V
C205, 206	1-102-125-00	CAP, CERAMIC 0.0047 10% 50V
C80	1-107-074-00	CAP, MICA 36PF 5% 50V
C20, 22, 68, 114	1-107-085-00	CAP, MICA 100PF 5% 50V
C8, 9, 10, 11, 59, 75, 78, 136, 138, 162	1-108-555-00	CAP, MYLAR 0.001 5% 50V
C74, 77, 115	1-108-563-00	CAP, MYLAR 0.0022 5% 50V

Ref. No. or Q'ty	Part No.	Description
(CD-17 BOARD, CARD RACK)		
(Board No. 1-606-075-11, 12, 13)		
C203	1-108-564-00	CAP, MYLAR 0.0024 5% 50V
C40, 42	1-108-565-00	CAP, MYLAR 0.0027 5% 50V
C39, 41	1-108-573-00	CAP, MYLAR 0.0056 5% 50V
C53, 118, 119, 137, 161, 201, 204	1-108-579-00	CAP, MYLAR 0.01 5% 50V
C131	1-108-581-00	CAP, MYLAR 0.012 5% 50V
C60	1-108-583-00	CAP, MYLAR 0.015 5% 50V
C52, 166	1-108-587-00	CAP, MYLAR 0.022 5% 50V
C5, 35, 36, 37, 38, 152, 153	1-108-595-00	CAP, MYLAR 0.047 5% 50V
C73, 76	1-108-603-00	CAP, MYLAR 0.1 5% 50V
C67	1-109-555-00	CAP, MICA 560PF 5% 100V
C19, 81	1-109-561-00	CAP, MICA 0.001 5% 100V
C123, 124, 127	1-123-818-00	CAP, ELECT 22 25V
C4, 13, 23, 26, 30, 31, 43, 44, 61, 62, 63, 72, 79	1-123-821-00	CAP, ELECT 47 16V
C32, 132, 141, 144, 147, 149, 150, 157	1-123-822-00	CAP, ELECT 47 10V
C159	1-124-141-00	CAP, ELECT 330 10V
C21	1-130-079-00	CAP, POLY 8600PF 1% 50V
C6, 7	1-131-345-00	CAP, TANT 0.47 10% 35V
C70	1-131-349-00	CAP, TANT 2.2 35V
C121, 165	1-131-371-00	CAP, TANT 10 10% 16V
C126	1-131-373-00	CAP, TANT 22 10% 16V
C120	1-131-374-00	CAP, TANT 33 10% 16V
CV1	1-141-260-00	CAP, TRIMMER 50PF
C122	1-161-039-00	CAP, CERAMIC 0.001 10% 50V
C3, 18, 24, 25, 27, 28, 33, 50, 51, 64, 65, 66, 69, 112, 113, 116, 117, 128, 130, 133, 135, 139, 140, 142, 143, 145, 146, 148, 151, 154, 155, 156, 158, 160	1-161-055-00	CAP, CERAMIC 0.022 10% 50V

Ref. No. or Q'ty	Part No.	Description
(CD-17 BOARD, CARD RACK)		
(Board No. 1-606-075-11, 12, 13)		
R78	1-214-134-00	RES, METAL 1.2K 1% 1/4W
R82	1-214-138-00	RES, METAL 1.8K 1% 1/4W
R87	1-214-145-00	RES, METAL 3.6K 1% 1/4W
R29	1-214-146-00	RES, METAL 3.9K 1% 1/4W
R89	1-214-149-00	RES, METAL 5.1K 1% 1/4W
R13	1-214-151-00	RES, METAL 6.2K 1% 1/4W
R47, 49, 107, 108	1-214-155-00	RES, METAL 9.1K 1% 1/4W
R28, 46, 48, 88, 105, 106, 117, 118	1-214-156-00	RES, METAL 10K 1% 1/4W
R7, 27, 38, 42, 122, 123	1-214-160-00	RES, METAL 15K 1% 1/4W
R10, 11	1-214-163-00	RES, METAL 20K 1% 1/4W
R43, 50	1-214-167-00	RES, METAL 30K 1% 1/4W
R33, 90	1-214-178-00	RES, METAL 82K 1% 1/4W
R198	1-214-180-00	RES, METAL 100K 1% 1/4W
RV14, 15, 16, 17	1-224-938-00	RES, VAR, METAL 2K
RV2, 3, 6, 7, 8, 9, 10, 11, 12	1-224-940-00	RES, VAR, METAL 10K
RV13	1-224-941-00	RES, VAR, METAL 20K
RV5	1-224-942-00	RES, VAR, METAL 50K
RV4	1-226-698-00	RES, VAR, CERMET 10K
RV1	1-228-763-00	RES, VAR, CERMET 5K
RB1	1-235-109-00	RES BLOCK, 22K×8
R32, 159, 194, 206, 209	1-247-783-00	RES, CARBON 10 5% 1/6W
R68, 86, 91, 174	1-247-799-00	RES, CARBON 47 5% 1/6W
R128	1-247-804-00	RES, CARBON 75 5% 1/6W
R61, 310	1-247-807-00	RES, CARBON 100 5% 1/6W
R216	1-247-823-00	RES, CARBON 470 5% 1/6W
R171	1-247-824-00	RES, CARBON 510 5% 1/6W
R36, 37, 39, 41, 95, 99, 101, 103, 149, 157, 160, 301, 302, 303	1-247-831-00	RES, CARBON 1K 5% 1/6W

Ref. No. or Q'ty	Part No.	Description
(CD-17 BOARD, CARD RACK)		
(Board No. 1-606-075-11, 12, 13)		
R51, 54, 100, 102	1-247-835-00	RES, CARBON 1.5K 5% 1/6W
R67	1-247-837-00	RES, CARBON 1.8K 5% 1/6W
R66, 119, 131, 133, 186, 196, 197	1-247-839-00	RES, CARBON 2.2K 5% 1/6W
R8	1-247-842-00	RES, CARBON 3K 5% 1/6W
R22, 24, 80	1-247-843-00	RES, CARBON 3.3K 5% 1/6W
R6, 75, 79, 132, 187, 211	1-247-847-00	RES, CARBON 4.7K 5% 1/6W
R142, 143	1-247-848-00	RES, CARBON 5.1K 5% 1/6W
R124, 156	1-247-850-00	RES, CARBON 6.2K 5% 1/6W
R141	1-247-851-00	RES, CARBON 6.8K 5% 1/6W
R1, 2, 3, 5, 16, 17, 18, 19, 25, 30, 31, 34, 44, 45, 52, 53, 55, 56, 57, 58, 59, 60, 63, 71, 83, 84, 85, 92, 93, 94, 96, 97, 109, 110, 111, 112, 113, 114, 115, 116, 120, 130, 138, 139, 147, 148, 152, 154, 157, 162, 164, 165, 166, 167, 169, 175, 215, 304, 305	1-247-855-00	RES, CARBON 10K 5% 1/6W
R121	1-247-857-00	RES, CARBON 12K 5% 1/6W
R134, 135	1-247-858-00	RES, CARBON 13K 5% 1/6W
R192, 193	1-247-861-00	RES, CARBON 18K 5% 1/6W
R65, 178	1-247-862-00	RES, CARBON 20K 5% 1/6W
R20, 21, 69, 70, 81, 170, 176, 180, 181, 182, 185, 200, 201	1-247-863-00	RES, CARBON 22K 5% 1/6W
R125	1-247-864-00	RES, CARBON 24K 5% 1/6W
R172	1-247-865-00	RES, CARBON 27K 5% 1/6W
R4, 9, 64, 168, 179	1-247-866-00	RES, CARBON 30K 5% 1/6W

Ref. No. or Q'ty	Part No.	Description
(CD-17 BOARD, CARD RACK)		
(Board No. 1-606-075-11, 12, 13)		
R136	1-247-869-00	RES, CARBON 39K 5% 1/6W
R15, 161	1-247-870-00	RES, CARBON 43K 5% 1/6W
R158	1-247-873-00	RES, CARBON 56K 5% 1/6W
R129	1-247-876-00	RES, CARBON 75K 5% 1/6W
R140	1-247-878-00	RES, CARBON 91K 5% 1/6W
R14, 35, 40, 98, 104, 151, 173	1-247-879-00	RES, CARBON 100K 5% 1/6W
R163, 214	1-247-886-00	RES, CARBON 200K 5% 1/6W
R188, 189, 190, 191	1-247-895-00	RES, CARBON 470K 5% 1/6W
R77	1-247-901-00	RES, CARBON 820K 5% 1/6W
R202, 203, 204, 207, 212, 213	1-247-903-00	RES, CARBON 1M 5% 1/6W
L3	1-408-421-00	INDUCTOR, MICRO, 100 5%
L1, 2, 4	1-409-339-00	COIL, SN
S3	1-516-925-21	SWITCH, DIP, 8-CKT
S7	1-552-539-00	SWITCH, PUSH
S1, 2	1-553-440-00	SWITCH, TOGGLE
S1 (NS)	1-554-441-00	SWITCH, TOGGLE
S4, 5, 6	1-554-027-00	SWITCH, ROTARY
S8	1-554-080-00	SWITCH, ROTARY
TP1, 2, 3, 4, 5, 6, 7, 8, 9, 10, 11, 12, 13, 14, 15, 16, 17, 18, 19, 20, 21, 23, 24, 30, 31	() 3-673-805-01	TERMINAL, TP
TPE1, 2, 3, 4, 5, 6	() 3-673-805-11	TERMINAL, TP
1pc	() 3-673-865-00	LEVER, WITH PIN
1pc	() 3-673-867-00	PLATE, INDICATION, PC BOARD
1pc	() 3-674-628-00	LABEL (CD-17), PC BOARD
1pc	() 3-693-053-01	LABEL PS-NS (CD-17), PC BOARD
6pcs	4-866-397-00	CUSHION, LED
4pcs	7-621-981-15	SCREW, PSW 2.6×6
2pcs	() 7-626-317-21	PIN, SPRING 2.5×8

Ref. No. or Q'ty	Part No.	Description
(CD-17 BOARD, CARD RACK)		
(Board No. 1-606-075-11, 12, 13)		
D1, 2, 3, 4, 5, 6, 7, 8, 9, 10, 11, 12, 13, 14, 15, 16, 18, 19, 20, 21, 22, 23, 24, 25, 26, 27, 28, 29, 30, 31, 32, 33, 34, 35, 36, 37, 38, 39, 40, 41, 42, 43, 44, 45, 46, 47	8-719-815-55	DIODE 1S1555
Q10, 18, 20	8-729-117-54	TRANSISTOR 2SA1175
Q9, 19	8-729-364-12	TRANSISTOR 2SC641K
Q7, 8, 15	8-729-672-43	TRANSISTOR 2SC2724
IC31, 32	8-751-300-00	IC CX130
IC27, 4L	8-759-045-38	IC MC14538BCP, CMOS
IC26, 29	8-759-131-11	IC UPC311C
IC1, 2, 4, 25, 28, 35, 37	8-759-145-58	IC UPC4558C
IC3F, 5F, 5G, 5I, 5K	8-759-182-53	IC UPD8253C-5, NMOS
IC1C, 4K	8-759-240-11	IC TC4011BP, CMOS
IC1D, 2D, 4M	8-759-240-13	IC TC4013BP, CMOS
IC24	8-759-240-51	IC TC4051BP, CMOS
IC4E	8-759-240-71	IC TC4071BP, CMOS
IC4O	8-759-240-81	IC TC4081BP, CMOS
IC3E, 4H, 5Q	8-759-241-74	IC TC40174BP, CMOS
IC4D, 5M	8-759-245-20	IC TC4520BP, CMOS
IC4I, 4J, 5A, 5B, 5C, 5D, 5E	8-759-345-03	IC HD14503BP, CMOS
IC8	8-759-708-05	IC NJM78L05A
IC11, 12, 13, 22, 23, 33, 34	8-759-745-60	IC NJM4560D

Ref. No. or Q'ty	Part No.	Description
(CD-17 BOARD, CARD RACK)		
(Board No. 1-606-075-11, 12, 13)		
IC18	8-759-900-00	IC SN74LS00N, TTL
IC3C, 4Q, 4S, 5R	8-759-900-04	IC SN74LS04N, TTL
IC3D	8-759-900-14	IC SN74LS14N, TTL
IC4P	8-759-900-32	IC SN74LS32N, TTL
IC2C, 3B	8-759-900-74	IC SN74LS74AN, TTL
IC19, 4N	8-759-900-86	IC SN74LS86N, TTL
IC5N, 5O, 5P	8-759-901-07	IC SN74LS107AN, TTL
IC4B, 4C, 5L	8-759-901-38	IC SN74LS138N, TTL
IC7, 17, 2B, 4G	8-759-902-21	IC SN74LS221N, TTL
IC4R	8-759-903-93	IC SN74LS393N, TTL
IC9, 21	8-759-952-07	IC SN75207BN
IC3, 5, 6, 14, 15, 16	8-759-990-82	IC TL082CP
Q1, 11, 12, 13	8-761-622-00	TRANSISTOR 2SC1636
Q3, 4, 5, 6, 16, 17, 21, 22, 23	8-769-192-00	TRANSISTOR 2SK43-2

Ref.No. or Q'ty	Part No.	Description
CD-17 BOARD (BVH-2000PS,2180PS/CARD RACK)		
Board No; 1-606-075-14 & up		
1pc	() A-6015-072-C	COMPLETE PCB,CD-17
	() A-6015-096-A	COMPLETE PCB,CD-17 (For BVH-2000PS 10,12,14 model)
(This assembly includes the following parts.)		
1pc	() X-3673-641-0	PLATE ASSY,SHIELD
C11	1-102-074-00	CAP,CERAMIC 0.001 10% 50V
C68	1-102-106-00	CAP,CERAMIC 100PF 10% 50V
C115	1-102-113-00	CAP,CERAMIC 390PF 10% 50V
C112,113	1-102-125-00	CAP,CERAMIC 0.0047 10% 50V
C45	1-107-074-00	CAP,MICA 36PF 5% 50V
C150	1-107-077-00	CAP,MICA 47PF 5% 50V
C14,15,46,49	1-107-085-00	CAP,MICA 100PF 5% 50V
C42	1-109-555-00	CAP,MICA 560PF 5% 100V
C44	1-109-561-00	CAP,MICA 0.001 5% 100V
C148	1-124-141-00	CAP,ELECT 330 10V
C78,90	1-124-234-00	CAP,ELECT 22 25V
C1,2,10,18,21,24,25,33, 34,36,41,47,56,57,95, 103,123,134,136	1-124-236-00	CAP,ELECT 47 16V
C13	1-130-079-00	CAP,POLY 8600PF 1% 50V
C8,9,61,64,85,117,118	1-130-471-00	CAP,MYLAR 0.001 5% 50V
C50,60,63	1-130-475-00	CAP,MYLAR 0.0022 5% 50V
C31,55,121	1-130-476-00	CAP,MYLAR 0.0027 5% 50V
C30,54	1-130-480-00	CAP,MYLAR 0.0056 5% 50V
C39,99,100,107	1-130-483-00	CAP,MYLAR 0.01 5% 50V

Ref.No. or Q'ty	Part No.	Description
(CD-17 BOARD,BVH-2000PS,2180PS/CARD RACK) (Borad No.1-606-075-14 & up)		
C127	1-130-484-00	CAP,MYLAR 0.012 5% 50V
C40	1-130-485-00	CAP,MYLAR 0.015 5% 50V
C38	1-130-487-00	CAP,MYLAR 0.022 5% 50V
C7,28,29,52,53,79,122, 126	1-130-491-00	CAP,MYLAR 0.047 5% 50V
C62,65	1-130-495-00	CAP,MYLAR 0.1 5% 50V
C5,6	1-131-345-00	CAP,TANT 0.47 10% 35V
C66	1-131-349-00	CAP,TANT 2.2 10% 35V
C74,75	1-131-350-00	CAP,TANT 3.3 10% 35V
C83,84,86,89	1-131-373-00	CAP,TANT 22 10% 16V
C87	1-131-374-00	CAP,TANT 33 10% 16V
CV1	1-141-260-00	TRIMER,CERAMIC
C3,4,12,16,17,19,20,22, 26,32,35,37,43,48,51, 58,59,67,69,71,72,73, 76,77,80,81,88,91,93, 96,98,101,102,104,105, 106,108,109,110,111, 114,116,119,124,125, 128,129,130,131,132, 133,135,137,138,139, 140,141,142,143,144, 145,146,147,149	1-162-596-00	CAP,CERAMIC 0.022 25V
R109,110	1-215-421-00	CAP,METAL 1K 1% 1/6W
R46	1-215-423-00	RES,METAL 1.2K 1% 1/6W
R41	1-215-427-00	RES,METAL 1.8K 1% 1/6W
R49	1-215-434-00	RES,METAL 3.6K 1% 1/6W
R15	1-215-435-00	RES,METAL 3.9K 1% 1/6W
R52	1-215-438-00	RES,METAL 5.1K 1% 1/6W
R8	1-215-440-00	RES,METAL 6.2K 1% 1/6W
R56	1-215-441-00	RES,METAL 6.8K 1% 1/6W
R27,63,67,73	1-215-444-00	RES,METAL 9.1K 1% 1/6W
R16,30,50,64,70,71,154, 155	1-215-445-00	RES,METAL 10K 1% 1/6W
R11,19,29,61,156,161	1-215-449-00	RES,METAL 15K 1% 1/6W

Ref.No. or Q'ty	Part No.	Description
(CD-17 BOARD,BVH-2000PS,2180PS/CARD RACK)		
(Borad No.1-606-075-14 & up)		
R13,14	1-215-452-00	RES,METAL 20K 1% 1/6W
R25,60	1-215-456-00	RES,METAL 30K 1% 1/6W
R55	1-215-463-00	RES,METAL 56K 1% 1/6W
R22	1-215-465-00	RES,METAL 68K 1% 1/6W
R21	1-215-469-00	RES,METAL 100K 1% 1/6W
RV14,15,16,17	1-224-938-00	RES,VAR,METAL 2K
RV402	1-224-939-00	RES,VAR,METAL 5K
RV2,3,6,7,8,9,10,11,12	1-224-940-00	RES,VAR,METAL 10K
RV13,401	1-224-941-00	RES,VAR,METAL 20K
RV5	1-224-942-00	RES,VAR,METAL 50K
RV4	1-228-120-00	RES,VAR,CERMET 20K
RV1	1-228-763-00	RES,VAR,CERMET 5K
RB1	1-235-109-00	RES BLOCK,22Kx8
R117	1-247-791-00	RES,CARBON 22 5% 1/6W
R57,176	1-247-799-00	RES,CARBON 47 5% 1/6W
R120	1-247-804-00	RES,CARBON 75 5% 1/6W
R163,190	1-247-807-00	RES,CARBON 100 5% 1/6W
R86	1-247-823-00	RES,CARBON 470 5% 1/6W
R24,28,75,79,147	1-247-831-00	RES,CARBON 1K 5% 1/6W
R65,66,72,74	1-247-835-00	RES,CARBON 1.5K 5% 1/6W
R43	1-247-837-00	RES,CARBON 1.8K 5% 1/6W
R44,59,68,144,145,174	1-247-839-00	RES,CARBON 2.2K 5% 1/6W
R12	1-247-842-00	RES,CARBON 3K 5% 1/6W
R4,42,45,69,146,153	1-247-847-00	RES,CARBON 4.7K 5% 1/6W
R129,159	1-247-850-00	RES,CARBON 6.2K 5% 1/6W
R94,98,122	1-247-851-00	RES,CARBON 6.8K 5% 1/6W

Ref.No. or Q'ty	Part No.	Description
(CD-17 BOARD,BVH-2000PS,2180PS/CARD RACK)		
(Borad No.1-606-075-14 & up)		
R1,2,3,5,17,20,23,26,33, 38,39,48,53,54,62,76, 77,100,104,105,106,116, 119,125,130,131,141, 142,143,149,151,152, 160,162,164,165,167, 168,175,177,180,186, 187	1-247-855-00	RES,CARBON 10K 5% 1/6W
R158	1-247-857-00	RES,CARBON 12K 5% 1/6W
R136,137	1-247-858-00	RES,CARBON 13K 5% 1/6W
R95,97	1-247-859-00	RES,CARBON 15K 5% 1/6W
R115	1-247-861-00	RES,CARBON 18K 5% 1/6W
R40	1-247-862-00	RES,CARBON 20K 5% 1/6W
R36,37,82,88,89,91,133, 134,135,171,172,181, 184,185	1-247-863-00	RES,CARBON 22K 5% 1/6W
R157	1-247-864-00	RES,CARBON 24K 5% 1/6W
R170	1-247-865-00	RES,CARBON 27K 5% 1/6W
R6,7,35,118,173	1-247-866-00	RES,CARBON 30K 5% 1/6W
R114	1-247-867-00	RES,CARBON 33K 5% 1/6W
R107,108,121	1-247-869-00	RES,CARBON 39K 5% 1/6W
R9	1-247-870-00	RES,CARBON 43K 5% 1/6W
R99,101,102,103	1-247-871-00	RES,CARBON 47K 5% 1/6W
R128	1-247-873-00	RES,CARBON 56K 5% 1/6W
R58	1-247-876-00	RES,CARBON 75K 5% 1/6W
R123	1-247-878-00	RES,CARBON 91K 5% 1/6W
R10,34,80,96,112,113, 126,188	1-247-879-00	RES,CARBON 100K 5% 1/6W
R83	1-247-895-00	RES,CARBON 470K 5% 1/6W

Ref.No. or Q'ty	Part No.	Description
(CD-17 BOARD,BVH-2000PS,2180PS/CARD RACK)		
(Borad No.1-606-075-14 & up)		
R47	1-247-901-00	RES,CARBON 820K 5% 1/6W
R85,189	1-247-903-00	RES,CARBON 1M 5% 1/6W
R111	1-249-433-11	RES,CARBON 22K 5% 1/6W
L1	1-408-421-00	INDUCTOR,MICRO,100 5%
L2,3,4	1-421-370-00	COIL,CHOKE
S3	1-516-925-21	SWITCH,DIP,8-CKT
S7	1-552-539-00	SWITCH,PUSH
S1,2	1-553-440-00	SWITCH,TOGGLE
S1(NS)	1-553-441-00	SWITCH,TOGGLE
S4,5,6	1-554-027-00	SWITCH,ROTARY
S8	1-554-080-00	SWITCH,ROTARY
TP4,5,8,9,10,11,14,15, 16,17,18,19,20,21,23, 24,30,31,401,402,403, 404,405		
()	3-657-703-01	TERMINAL,TP
TPE1,2,3,4,5,6		
()	3-673-805-11	TERMINAL,TP
1pc ()	3-673-865-00	LEVER,WITH PIN
1pc ()	3-673-867-00	PLATE,INDICATION, PC BOARD
1pc ()	3-674-628-00	LABEL(CD-17),PC BOARD
1pc ()	3-693-053-01	LABEL PS-NS (CD-17),PC BOARD
TP6,7,12,13		
()	3-693-032-01	TERMINAL,TP
1pc	7-621-981-15	SCREW,PSW 2.6x6
1pc	7-626-317-21	PIN,SPRING 2.5x8
D1,2,3,4,5,6,7,8,9,10, 11,12,13,14,15,16,17, 18,19,20,21,22,23,24, 25,26,27,28,29,30,31, 32,33,34	8-719-815-55	DIODE 1S1555

Ref.No. or Q'ty	Part No.	Description
(CD-17 BOARD,BVH-2000PS,2180PS/CARD RACK)		
(Borad No.1-606-075-14 & up)		
Q4,5,10	8-729-105-71	TRANSISTOR 2SK523
Q3,8	8-729-364-12	TRANSISTOR 2SC641K
Q2,7,9	8-729-600-60	TRANSISTOR 2SA1115
IC11,13,14,15	8-741-123-90	IC BX1239
IC29,30	8-751-300-00	IC CX130
IC2B,5A,5Q,5R,6B,6D,6E, 6L	8-759-345-03	IC MC14503BCP,CMOS
IC2D,5H	8-759-045-38	IC MC14538BCP,CMOS
IC3,4,18	8-759-101-83	IC UPC649C
IC25	8-759-103-19	IC UPC319C
IC7	8-759-104-31	IC UPD74HC02C
IC22	8-759-131-11	IC UPC311C
IC1,10,12,16,24,28	8-759-145-58	IC UPC4558C
IC6M,6P,6R,6S,6U	8-759-182-53	IC UPD8253C-5,NMOS
IC6,21,5L	8-759-203-83	IC TC74HC4538P,CMOS
IC5E,5G	8-759-205-76	IC TC4013BP
IC3C,5F	8-759-240-11	IC TC4011BP,CMOS
IC32	8-759-240-51	IC TC4051BP,CMOS
IC5C	8-759-240-71	IC TC4071BP,CMOS
IC4B	8-759-240-81	IC TC4081BP,CMOS
IC4E,6F,6G	8-759-241-74	IC TC40174BP,CMOS
IC4D,5B	8-759-245-20	IC TC4520BP,CMOS
IC9	8-759-708-05	IC NJM78L05A
IC31	8-759-745-60	IC NJM4560D
IC3D	8-759-900-00	IC SN74LS00N,TTL
IC3E,4F,5P,5S,5V	8-759-900-04	IC SN74LS04N,TTL

Ref.No. or Q'ty	Part No.	Description
(CD-17 BOARD,BVH-2000PS,2180PS/CARD RACK)		
(Borad No.1-606-075-14 & up)		
IC5D	8-759-900-14	IC SN74LS14N,TTL
IC6H	8-759-900-32	IC SN74LS32N,TTL
IC3F,5J,6J	8-759-900-74	IC SN74LS74AN,TTL
IC4C	8-759-900-86	IC SN74LS86N,TTL
IC5K,5M,6K	8-759-901-07	IC SN74LS107AN,TTL
IC5N,5T,6C	8-759-901-38	IC SN74LS138N,TTL
IC23	8-759-901-53	IC SN74LS153N,TTL
IC5U	8-759-903-93	IC SN74LS393N,TTL
IC8	8-759-910-43	IC CX23028
IC2,5,17,19,20	8-759-990-82	IC TL082CP
IC26,27	8-759-990-84	IC TL084CP
Q1,6	8-761-622-00	TRANSISTOR 2SC1636

Ref.No. or Q'ty	Part No.	Description
SR-15 BOARD (BVH-2000PS,2180PS/CARD RACK)		
1pc	() A-6015-073-A	COMPLETE PCB,SR-15
(This assembly includes the following parts.)		
1pc	() X-3673-641-0	PLATE ASSY,SHIELD
C111	1-102-106-00	CAP,CERAMIC 100PF 10% 50V
C20,110	1-102-112-00	CAP,CERAMIC 330PF 10% 50V
C40	1-102-115-00	CAP,CERAMIC 560PF 10% 50V
C100	1-107-048-00	CAP,MICA 6.8PF +/-0.5PF 500V
C101	1-107-077-00	CAP,MICA 47PF 5% 50V
C13	1-107-085-00	CAP,MICA 100PF 5% 50V
C21,68,69,76	1-107-093-00	CAP,MICA 220PF 5% 50V
C65	1-107-160-00	CAP,MICA 36PF 5% 500V
C15,16	1-107-164-00	CAP,MICA 51PF 5% 500V
C34	1-107-166-00	CAP,MICA 62PF 5% 500V
C36	1-107-202-00	CAP,MICA 10PF 5% 500V
C64,112	1-107-206-00	CAP,MICA 15PF 5% 500V
C67	1-107-210-00	CAP,MICA 22PF 5% 500V
C9,10,26,87	1-108-555-00	CAP,MYLAR 0.001 5% 50V
C48	1-108-559-00	CAP,MYLAR 0.0015 5% 50V
C70,80	1-108-563-00	CAP,MYLAR 0.0022 5% 50V
C84	1-108-571-00	CAP,MYLAR 0.0047 5% 50V
C99	1-108-575-00	CAP,MYLAR 0.0068 5% 50V
C66,71,91	1-108-579-00	CAP,MYLAR 0.01 5% 50V
C6,59	1-108-587-00	CAP,MYLAR 0.022 5% 50V
C98	1-108-591-00	CAP,MYLAR 0.033 5% 50V

Ref.No. or Q'ty	Part No.	Description
(SR-15 BOARD,CARD RACK)		
C33,78,79,102	1-108-595-00	CAP,MYLAR 0.047 5% 50V
C19,103	1-108-603-00	CAP,MYLAR 0.1 5% 50V
C11	1-109-553-00	CAP,MICA 470PF 5% 100V
C75	1-109-561-00	CAP,MICA 0.001 5% 100V
C41	1-123-611-00	CAP,ELECT 1 50V
C60	1-123-616-00	CAP,ELECT 4.7 25V
C63	1-123-818-00	CAP,ELECT 22 25V
C3,4,5,23,24,25,27,28, 35,37,38,42,43,44,46, 49,53,56,58	1-123-821-00	CAP,ELECT 47 16V
C14,62,73,77,82,83,86, 89	1-123-822-00	CAP,ELECT 47 10V
C93	1-124-141-00	CAP,ELECT 330 10V
C1,2,31,90	1-131-347-00	CAP,TANT 1 10% 35V
C7,8	1-131-373-00	CAP,TANT 22 10% 16V
C12,17,18,22,29,30,39, 45,47,50,51,52,54,55, 57,61,72,74,81,85,88, 92,94,95,96,97	1-161-055-00	CAP,CERAMIC 0.022 10% 50V
R51	1-214-118-00	RES,METAL 270 1% 1/4W
R53	1-214-120-00	RES,METAL 330 1% 1/4W
R15	1-214-130-00	RES,METAL 820 1% 1/4W
R54	1-214-134-00	RES,METAL 1.2K 1% 1/4W
R19	1-214-146-00	RES,METAL 3.9K 1% 1/4W
R18	1-214-156-00	RES,METAL 10K 1% 1/4W
R135	1-214-173-00	RES,METAL 51K 1% 1/4W
RV3	1-224-936-00	RES,VAR,METAL 500
RV4	1-224-938-00	RES,VAR,METAL 2K
RV6,7	1-224-941-00	RES,VAR,METAL 20K
RV1,2	1-224-943-00	RES,VAR,METAL 100K
RV5	1-230-741-21	RES,VAR,CARBON 10K

Ref.No. or Q'ty	Part No.	Description
(SR-15 BOARD,CARD RACK)		
R104,107,108,130,131, 132,146	1-247-783-00	RES,CARBON 10 5% 1/6W
R77,79,88	1-247-800-00	RES,CARBON 51 5% 1/6W
R46,87	1-247-804-00	RES,CARBON 75 5% 1/6W
R56,60,144,160	1-247-807-00	RES,CARBON 100 5% 1/6W
R21	1-247-811-00	RES,CARBON 150 5% 1/6W
R65,155	1-247-814-00	RES,CARBON 200 5% 1/6W
R158,170	1-247-815-00	RES,CARBON 220 5% 1/6W
R57	1-247-816-00	RES,CARBON 240 5% 1/6W
R78,117,124,154	1-247-823-00	RES,CARBON 470 5% 1/6W
R42	1-247-825-00	RES,CARBON 560 5% 1/6W
R24,134	1-247-827-00	RES,CARBON 680 5% 1/6W
R26,41,45,52,71,72,91, 94,101,103,110,111, 120,123,125	1-247-831-00	RES,CARBON 1K 5% 1/6W
R23,29,31	1-247-835-00	RES,CARBON 1.5K 5% 1/6W
R40,68,70	1-247-838-00	RES,CARBON 2K 5% 1/6W
R55,62,64,142	1-247-839-00	RES,CARBON 2.2K 5% 1/6W
R95	1-247-840-00	RES,CARBON 2.4K 5% 1/6W
R2,85,86,162	1-247-842-00	RES,CARBON 3K 5% 1/6W
R22,121,143	1-247-843-00	RES,CARBON 3.3K 5% 1/6W

Ref.No. or Q'ty	Part No.	Description
(SR-15 BOARD,CARD RACK)		
R27	1-247-844-00	RES,CARBON 3.6K 5% 1/6W
R67	1-247-846-00	RES,CARBON 4.3K 5% 1/6W
R34,36,58	1-247-847-00	RES,CARBON 4.7K 5% 1/6W
R20,47,74,82,112,113	1-247-848-00	RES,CARBON 5.1K 5% 1/6W
R161	1-247-850-00	RES,CARBON 6.2K 5% 1/6W
R1	1-247-852-00	RES,CARBON 7.5K 5% 1/6W
R9,13,16,17,25,48,59,61, 76,89,90,92,93,100,102, 141,151,156	1-247-855-00	RES,CARBON 10K 5% 1/6W
R10,14,37,49,171	1-247-859-00	RES,CARBON 15K 5% 1/6W
R50,118,119	1-247-861-00	RES,CARBON 18K 5% 1/6W
R73,80,83,96	1-247-862-00	RES,CARBON 20K 5% 1/6W
R4,122,126,127,128,139, 148,150,152	1-247-863-00	RES,CARBON 22K 5% 1/6W
R30	1-247-866-00	RES,CARBON 30K 5% 1/6W
R28,33,97,99	1-247-871-00	RES,CARBON 47K 5% 1/6W
R5,39	1-247-872-00	RES,CARBON 51K 5% 1/6W
R43	1-247-875-00	RES,CARBON 68K 5% 1/6W
R11,12,35,38,66,136,140, 147,149	1-247-879-00	RES,CARBON 100K 5% 1/6W
R32	1-247-883-00	RES,CARBON 150K 5% 1/6W
R3	1-247-886-00	RES,CARBON 200K 5% 1/6W
R81,138	1-247-892-00	RES,CARBON 360K 5% 1/6W
R75	1-247-893-00	RES,CARBON 390K 5% 1/6W

Ref.No. or Q'ty	Part No.	Description
(SR-15 BOARD,CARD RACK)		
R98	1-247-894-00	RES,CARBON 430K 5% 1/6W
R137	1-247-895-00	RES,CARBON 470K 5% 1/6W
R6	1-247-896-00	RES,CARBON 510K 5% 1/6W
R157,159	1-247-901-00	RES,CARBON 820K 5% 1/6W
R7,8,44,63,84	1-247-903-00	RES,CARBON 1M 5% 1/6W
LV1	1-407-569-00	INDUCTOR,VAR,10
L1	1-408-415-00	INDUCTOR,MICRO,33 5%
DL1	1-415-121-00	DELAY LINE,100nS
L2,3,4	1-421-370-00	COIL,CHOKE
ME1	1-520-449-00	METER
CF1	1-527-497-00	FILTER,CERAMIC 4.55MHz
X1	1-527-521-00	CRYSTAL,17.732475MHz
S1,2	1-553-440-00	SWITCH,TOGGLE
1pc	2-282-313-11	KNOB,CONTROL
TP2,5,8,9,12,13,14,15, 16,22,23	() 3-657-703-01	TERMINAL,TP
TPE1,2,3,4,5	() 3-673-805-11	TERMINAL,TP

Ref.No. or Q'ty		Part No.	Description
(SR-15 BOARD,CARD RACK)			
1pc	()	3-673-865-00	LEVER,WITH PIN
1pc	()	3-673-867-00	PLATE,INDICATION, PC BOARD
1pc	()	3-674-626-00	LABEL(SR-15),PC BOARD
TP1,3,4,17,25			
	()	3-693-032-01	TERMINAL,TP
1pc		7-621-737-08	SET SCREW, 2.6x3,FLAT POINT
4pcs		7-621-981-15	SCREW,PSW 2.6x6
2pcs	()	7-626-317-21	PIN,SPRING 2.5x8
D7		8-719-100-27	DIODE RD4.7E-B2
D6		8-719-175-07	DIODE RD7.5E
D2		8-719-713-92	DIODE 1S2139B
D1,3,4,8,9,10,11,12,13, 14,15,16		8-719-815-55	DIODE 1S1555
Q10		8-723-305-00	TRANSISTOR 2SK43-5
Q5		8-729-117-54	TRANSISTOR 2SA1175
Q3,4		8-729-364-12	TRANSISTOR 2SC641K
Q2,7,8,13,14,15,16,19		8-729-603-50	TRANSISTOR 2SC403SP
Q17,18		8-729-606-32	TRANSISTOR 2SC2603
IC12,13		8-743-931-10	IC BX3931A
IC3		8-749-938-10	IC BX381
IC6		8-751-300-00	IC CX130
IC3K,4I,4K		8-759-045-38	IC MC14538BCP,CMOS
IC15,16		8-759-103-92	IC UPC318C
IC4J,5D		8-759-240-11	IC TC4011BP,CMOS
IC3E,3N,5I,5L		8-759-240-13	IC TC4013BP,CMOS
IC5F,5H		8-759-240-15	IC TC4015BP,CMOS
IC5K		8-759-240-40	IC TC4040BP,CMOS
IC5M		8-759-240-71	IC TC4071BP,CMOS

Ref.No. or Q'ty	Part No.	Description
(SR-15 BOARD,CARD RACK)		
IC4N	8-759-241-74	IC TC40174BP,CMOS
IC4M,5N	8-759-345-03	IC HD14503BP,CMOS
IC3D,3H	8-759-900-00	IC SN74LS00N,TTL
IC5G	8-759-900-02	IC SN74LS02N,TTL
IC3C,3J,30,40	8-759-900-04	IC SN74LS04N,TTL
IC4D	8-759-900-08	IC SN74LS08N,TTL
IC3L,5C	8-759-900-32	IC SN74LS32N,TTL
IC4B,4E,4F,4H	8-759-900-74	IC SN74LS74AN,TTL
IC3M	8-759-900-86	IC SN74LS86N,TTL
IC4C,4L	8-759-901-07	IC SN74LS107AN,TTL
IC2C,2D,2E	8-759-901-12	IC SN74LS112AN,TTL
IC5J	8-759-901-57	IC SN74LS157N,TTL
IC4G	8-759-901-63	IC SN74LS163AN,TTL
IC3F	8-759-901-64	IC SN74LS164N,TTL
IC3I	8-759-902-21	IC SN74LS221N,TTL
IC2F	8-759-910-10	IC SN74S10N,TTL
IC2G	8-759-910-11	IC SN74S11N,TTL
IC5E	8-759-911-63	IC SN74S163N,TTL
IC9	8-759-918-23	IC NE527N
IC3B	8-759-941-23	IC SN74123N,TTL
IC14	8-759-951-07	IC SN75107AN
IC1,2,4,5,7,8	8-759-990-82	IC TL082CP
Q9	8-761-622-00	TRANSISTOR 2SC1636
Q1,6,11,12	8-769-192-00	TRANSISTOR 2SK43-2

Ref.No. or Q'ty	Part No.	Description
DT-05 BOARD (BVH-2000PS-02,04,12,14/2180PS-02,04)		
1pc (for 02/04/12/14 model)		
()	A-6015-074-B	COMPLETE PCB,DT-05
(This assembly includes the following parts.)		
1pc	() X-3673-678-0	PLATE ASSY,SHIELD(A)
C1,2	1-107-077-00	CAP,MICA 47PF 5% 50V
C4	1-107-206-00	CAP,MICA 15PF 5% 500V
C74	1-109-535-00	CAP,MICA 100PF 5% 100V
C47,52,69,75	1-109-540-00	CAP,MICA 180PF 5% 100V
C66,72	1-109-542-00	CAP,MICA 220PF 5% 100V
C70	1-109-547-00	CAP,MICA 330PF 5% 100V
C67,68,71,73	1-109-561-00	CAP,MICA 0.001 5% 100V
C3,45,83,86,90,91,92,93, 117,118	1-123-356-00	CAP,ELECT 10 50V
C6,11,17,23,25,33,34,36, 38	1-130-471-00	CAP,MYLAR 0.001 5% 50V
C32,35	1-130-473-00	CAP,MYLAR 0.0015 5% 50V
C31,37,40,42,53,80	1-130-475-00	CAP,MYLAR 0.0022 5% 50V
C8,19,20,24,27,28,41,76	1-130-479-00	CAP,MYLAR 0.0047 5% 50V
C26,62,63	1-130-483-00	CAP,MYLAR 0.01 5% 50V
C7,48,60	1-130-484-00	CAP,MYLAR 0.012 5% 50V
C18,65,119	1-130-485-00	CAP,MYLAR 0.015 5% 50V
C5,10	1-130-487-00	CAP,MYLAR 0.022 5% 50V
C13,14	1-130-491-00	CAP,MYLAR 0.047 5% 50V
C64	1-130-493-00	CAP,MYLAR 0.068 5% 50V
C21,43,44	1-131-341-00	CAP,TANT 0.1 10% 35V

Ref.No. or Q'ty	Part No.	Description
(DT-05 BOARD,CARD RACK)		
C15,16	1-131-342-00	CAP,TANT 0.15 10% 35V
C61	1-131-343-00	CAP,TANT 0.22 10% 35V
C9,12	1-131-345-00	CAP,TANT 0.47 10% 35V
C22,39	1-131-351-00	CAP,TANT 4.7 10% 35V
C29,30	1-131-380-00	CAP,TANT 33 10% 10V
C46,77,78,79,81,82,85, 88,89,94,95,96,97,98, 99,100,101,102,103,104, 105,106,107,108,109, 110,111,112,113	1-161-051-00	CAP,CERAMIC 0.01 10% 50V
R63,64,67,68	1-214-112-00	RES,METAL 150 1% 1/4W
R119	1-214-120-00	RES,METAL 330 1% 1/4W
R2,35,65,110	1-214-124-00	RES,METAL 470 1% 1/4W
R12,13,45,46,112,127	1-214-132-00	RES,METAL 1K 1% 1/4W
R39	1-214-136-00	RES,METAL 1.5K 1% 1/4W
R15,16,18,40,49,55	1-214-139-00	RES,METAL 2K 1% 1/4W
R14,48,80,81,82,84,142	1-214-143-00	RES,METAL 3K 1% 1/4W
R21,69,70,72,97	1-214-148-00	RES,METAL 4.7K 1% 1/4W
R34,51	1-214-151-00	RES,METAL 6.2K 1% 1/4W
R8	1-214-152-00	RES,METAL 6.8K 1% 1/4W
R66,113	1-214-154-00	RES,METAL 8.2K 1% 1/4W
R85	1-214-155-00	RES,METAL 9.1K 1% 1/4W
R17,24,26,27,43,53,58, 59,60,62,83,86,88,102, 106,107,108,109,123, 125,129,130,131,132, 134,137,140	1-214-156-00	RES,METAL 10K 1% 1/4W
R11,36	1-214-159-00	RES,METAL 13K 1% 1/4W

Ref.No. or Q'ty	Part No.	Description
(DT-05 BOARD,CARD RACK)		
R7,78,79,90	1-214-160-00	RES,METAL 15K 1% 1/4W
R10,18	1-214-162-00	RES,METAL 18K 1% 1/4W
R95,118,126	1-214-163-00	RES,METAL 20K 1% 1/4W
R1,4,121,122	1-214-164-00	RES,METAL 22K 1% 1/4W
R28,100,143,145	1-214-165-00	RES,METAL 24K 1% 1/4W
R19,31	1-214-166-00	RES,METAL 27K 1% 1/4W
R124,128	1-214-170-00	RES,METAL 39K 1% 1/4W
R74,77,93	1-214-172-00	RES,METAL 47K 1% 1/4W
R144	1-214-175-00	RES,METAL 62K 1% 1/4W
R41,42,56,57	1-214-176-00	RES,METAL 68K 1% 1/4W
R29	1-214-178-00	RES,METAL 82K 1% 1/4W
R22,71,73,75,76,91,92, 103	1-214-179-00	RES,METAL 91K 1% 1/4W
R20,23,25,38,44,47,54, 89,101,104,105,111,114, 115,116,120,135,141	1-214-180-00	RES,METAL 100K 1% 1/4W
R9,87,94	1-224-938-00	RES,VAR,METAL 2K
R33,99	1-224-939-00	RES,VAR,METAL 5K
R3,5,6,50,52,96,98,138	1-224-940-00	RES,VAR,METAL 10K
R61	1-224-941-00	RES,VAR,METAL 20K
R30	1-224-942-00	RES,VAR,METAL 50K
R139	1-224-943-00	RES,VAR,METAL 100K
RB2	1-231-407-00	RES BLOCK,2.2Kx8

Ref.No. or Q'ty	Part No.	Description
(DT-05 BOARD,CARD RACK)		
RB1	1-231-410-00	RES BLOCK,10Kx8
RB3	1-231-517-00	RES BLOCK,2.2Kx4
R146	1-247-873-00	RES,CARBON 56K 5% 1/6W
R37	1-247-891-00	RES,CARBON 330K 5% 1/6W
R117	1-247-895-00	RES,CARBON 470K 5% 1/6W
R147	1-249-432-11	RES,CARBON 18K 5% 1/6W
L1	1-421-370-00	COIL,CHOKE
S1	1-516-923-21	SWITCH,DIP,4-CKT
X1	1-527-227-00	CRYSTAL,14.31818MHz
S3,4	1-552-509-00	SWITCH,DIP,1-CKT
S2	1-553-440-00	SWITCH,TOGGLE
TP1,2,3,4,5,6,7,8,9,10	() 3-693-032-01	TERMINAL,TP
TPE1,2,3	() 3-673-805-11	TERMINAL,TP
1pc	() 3-673-865-00	LEVER,WITH PIN
1pc	() 3-673-867-00	PLATE,INDICATION, PC BOARD
1pc	() 3-674-625-03	LABEL(DT-05),PC BOARD
4pcs	7-621-981-15	SCREW,PSW2.6x6
2pcs	() 7-626-317-21	PIN,SPRING 2.5x8
D8,9	8-719-156-07	DIODE RD5.6E-B
D1,2,3,4,5,6,7,10,11	8-719-911-19	DIODE 1SS119
Q1	8-729-190-12	TRANSISTOR 2SC2901
IC2K	8-759-014-96	IC MC1496P
IC3H	8-759-040-46	IC MC14046BCP,CMOS
IC3G	8-759-045-26	IC MC14526BCP,CMOS
IC50	8-759-045-57	IC MC14557BCP,CMOS
IC1F,1H,1N,2J,2M,2P	8-759-145-58	IC UPC4558C
IC5H,5I	8-759-200-55	IC TC40H390P,CMOS
IC4M	8-759-240-01	IC TC4001BP,CMOS
IC3D,4D	8-759-240-08	IC TC4008BP,CMOS
IC4O,4Q	8-759-240-11	IC TC4011BP,CMOS

Ref.No. or Q'ty	Part No.	Description
(DT-05 BOARD,CARD RACK)		
IC3I,4I,4J	8-759-240-13	IC TC4013BP,CMOS
IC3P	8-759-240-15	IC TC4015BP,CMOS
IC2E	8-759-240-28	IC TC4028BP,CMOS
IC4G	8-759-240-43	IC TC4043BP,CMOS
IC3L,5L	8-759-240-69	IC TC4069UBP,CMOS
IC4L	8-759-240-71	IC TC4071BP,CMOS
IC5J	8-759-240-73	IC TC4073BP,CMOS
IC4H,4K,5G	8-759-240-81	IC TC4081BP,CMOS
IC3E	8-759-241-75	IC TC40175BP,CMOS
IC5F	8-759-245-12	IC TC4512BP,CMOS
IC5M	8-759-345-38	IC HD14538BP,CMOS
IC5D	8-759-900-00	IC SN74LS00N,TTL
IC3K,3O,4A,5P	8-759-900-02	IC SN74LS02N,TTL
IC2B	8-759-900-10	IC SN74LS10N,TTL
IC3N,5E	8-759-900-74	IC SN74LS74AN,TTL
IC2C	8-759-900-85	IC SN74LS85N,TTL
IC1Q	8-759-901-63	IC SN74LS163AN,TTL
IC5N	8-759-901-64	IC SN74LS164N,TTL
IC1C,1D,2D	8-759-901-74	IC SN74LS174N,TTL
IC2O,5C	8-759-901-75	IC SN74LS175N,TTL
IC1A,1B,3A,3B,4B	8-759-901-91	IC SN74LS191N,TTL
IC2,3F,3J,3M,3O,4F,5K	8-759-902-21	IC SN74LS221N,TTL
IC4C	8-759-903-74	IC SN74LS374N,TTL
IC5B	8-759-903-93	IC SN74LS393N,TTL
IC1	8-759-906-07	IC TL607CP
IC2A,4E	8-759-906-69	IC SN74LS669N,TTL

Ref.No. or Q'ty	Part No.	Description
(DT-05 BOARD,CARD RACK)		
IC1I,1M,2H	8-759-921-91	IC TL191CN
IC4N	8-759-974-06	IC SN7406N,TTL
IC1E	8-759-980-02	IC DACIC8BC
IC1P,2F,2N	8-759-990-04	IC TL074CN
IC1J,1L,2I	8-759-990-72	IC TL072CP

MB-14A BOARD (BVH-2000PS,2180PS/CARD RACK)

1pc	() A-6025-092-A	COMPLETE PCB,MB-14
(This assembly includes the following parts.)		
C2	1-125-235-00	CAP,ELECT 0.47F 5V
C1	1-161-051-00	CAP,CERAMIC 0.01 10% 50V
R1	1-213-132-00	⚠RES,METAL 120 5% 1W
R2	1-247-214-00	⚠RES,CARBON 82 5% 1/2W
CN331,332,333,334,335, 336,337,338,339,340, 341,342,343,344,345, 346,347,348	1-508-892-00	CONNECTOR,PCB,100P
CN327M,402M,403M	() 1-560-300-00	RECEP,3P,MALE
CN401M	() 1-560-301-00	RECEP,4P,MALE
CN303M,306M	() 1-560-304-00	RECEP,8P,MALE
CN302M,305M	() 1-560-305-00	RECEP,10P,MALE

Ref.No. or Q'ty	Part No.	Description
(MB-14A BOARD,CARD RACK)		
CN301M,304M		
	() 1-560-306-00	RECEP,12P,MALE
CN317M	() 1-560-726-00	RECEP,20P,MALE
CN315M,324M		
	() 1-560-727-00	RECEP,26P,MALE
CN314M,325M		
	() 1-560-728-00	RECEP,30P,MALE
CN323M	() 1-560-729-00	RECEP,34P,MALE
CN322M	() 1-560-730-00	RECEP,40P,MALE
CN313M	() 1-560-731-00	RECEP,50P,MALE
CN316M,326M		
	() 1-560-732-00	RECEP,60P,MALE
CN321M	() 1-560-753-00	RECEP,5P,MALE
CN307M,308M,309M,310M, 311M,312M		
	1-561-365-00	RECEP,COAXIAL,MALE
17pcs	7-686-527-01	SCREW,PSW 3x6
D3	8-719-200-02	DIODE 10E2
D1,2	8-719-815-55	DIODE 1S1555

Ref.No. or Q'ty	Part No.	Description
AP-12 BOARD (BVH-2000PS-00,02,10,12/2180PS-00,02)		
1pc (for 00/02/10/12 model)		
	() A-6013-068-A	COMPLETE PCB,AP-12
(This assembly includes the following parts.)		
C116,216,316		
	1-102-106-00	CAP,CERAMIC 100PF 10% 50V
C101,201	1-107-042-00	CAP,MICA 2.2PF +/-0.5PF 500V
C511	1-107-173-00	CAP,MICA 150PF 5% 500V
C106,206,306		
	1-107-204-00	CAP,MICA 12PF 5% 500V
C301	1-107-208-00	CAP,MICA 18PF 5% 500V
C503,686	1-108-560-00	CAP,MYLAR 0.0016 5% 50V
C117,217	1-109-528-00	CAP,MICA 51PF 5% 100V
C317,322	1-109-531-00	CAP,MICA 68PF 5% 100V
C114,214	1-109-534-00	CAP,MICA 91PF 5% 100V
C314	1-109-545-00	CAP,MICA 270PF 5% 100V
C681	1-109-547-00	CAP,MICA 330PF 5% 100V
C102,202,601,621		
	1-109-549-00	CAP,MICA 390PF 5% 100V
C703	1-109-556-00	CAP,MICA 620PF 5% 100V
C121,221	1-109-588-00	CAP,MICA 0.002 5% 500V
C321	1-109-595-00	CAP,MICA 0.0039 5% 500V
C113,213,313		
	1-109-668-00	CAP,MICA 62PF 5% 500V
C702	1-124-002-11	CAP,ELECT,NONPOLAR 1 50V
C701	1-124-006-11	CAP,ELECT,NONPOLAR 10 50V
C1,2,110,111,210,211, 310,311	1-124-445-00	CAP,ELECT 100 20% 16V
C688	1-124-472-11	CAP,ELECT 470 20% 10V
C104,204,304,610,613, 630,633,650,653,684, 685	1-124-477-11	CAP,ELECT 47 20% 25V
C119,120,219,220,319, 320,504,505,507,508, 604,605,624,625,644, 645	1-124-896-00	CAP,ELECT 33 20% 16V

Ref.No. or Q'ty	Part No.	Description
(AP-12 BOARD,2000PS-00,02,10,12/2180PS-00,02,TTP)		
C689	1-124-907-00	CAP,ELECT 10 20% 50V
C641	1-130-473-00	CAP,MYLAR 0.0015 5% 50V
C704	1-130-477-00	CAP,MYLAR 0.0033 5% 50V
C506	1-130-479-00	CAP,MYLAR 0.0047 5% 50V
C642	1-130-483-00	CAP,MYLAR 0.01 5% 50V
C682	1-130-485-00	CAP,MYLAR 0.015 5% 50V
C602,622	1-130-487-00	CAP,MYLAR 0.022 5% 50V
C107,207,307	1-130-495-00	CAP,MYLAR 0.1 5% 50V
C510	1-130-497-00	CAP,MYLAR 0.15 5% 50V
C108,115,208,215,308,315	1-131-351-00	CAP,TANT 4.7 10% 35V
C118,218,318,513,609, 629,649	1-131-353-00	CAP,TANT 10 10% 35V
C514	1-131-381-00	CAP,TANT 47 10% 10V
C519	1-131-427-00	CAP,TANT 220 20% 6.3V
C105,205,305,518,608, 628,648	1-131-429-00	CAP,TANT 470 20% 3.15V
C3,4,103,109,112,203, 209,212,303,309,312, 611,612,631,632,651, 652	1-161-055-00	CAP,CERAMIC 0.022 10% 50V
C11,12,13	1-163-168-00	CAP,CHIP CERAMIC 30PF 5% 50V
R516	1-210-828-00	RES,CARBON 4.7M 5% 1/4W
R524	1-215-412-00	RES,METAL 430 1% 1/6W
R329,332	1-215-418-00	RES,METAL 750 1% 1/6W
R302	1-215-428-00	RES,METAL 2K 1% 1/6W
R101,201,301	1-215-440-00	RES,METAL 6.2K 1% 1/6W
R110,210,310,682	1-215-442-00	RES,METAL 7.5K 1% 1/6W

Ref.No. or Q'ty	Part No.	Description
(AP-12 BOARD,2000PS-00,02,10,12/2180PS-00,02,TTP)		
R511	1-215-448-00	RES,METAL 13K 1% 1/6W
R102,202,602,622	1-215-454-00	RES,METAL 24K 1% 1/6W
R127,128,227,228,327, 328	1-215-462-00	RES,METAL 51K 1% 1/6W
R520	1-215-470-00	RES,METAL 110K 1% 1/6W
R115,116,215,216,315, 316	1-247-783-00	RES,CARBON 10 5% 1/6W
R605,625,645	1-247-793-00	RES,CARBON 27 5% 1/6W
R105,205,305,685	1-247-799-00	RES,CARBON 47 5% 1/6W
R118,218,318	1-247-803-00	RES,CARBON 68 5% 1/6W
R106,120,121,206,220, 221,306,320,321,509, 517,688,689	1-247-807-00	RES,CARBON 100 5% 1/6W
R131,231,331	1-247-815-00	RES,CARBON 220 5% 1/6W
R606,626,646,686	1-247-817-00	RES,CARBON 270 5% 1/6W
R601,621	1-247-827-00	RES,CARBON 680 5% 1/6W
R507,508,518,608,609, 628,629,648,649,681	1-247-831-00	RES,CARBON 1K 5% 1/6W
R514,641	1-247-833-00	RES,CARBON 1.2K 5% 1/6W
R129,132,133,229,232, 233,333,523	1-247-835-00	RES,CARBON 1.5K 5% 1/6W
R104,204,304,505	1-247-839-00	RES,CARBON 2.2K 5% 1/6W

Ref.No. or Q'ty	Part No.	Description
(AP-12 BOARD,2000PS-00,02,10,12/2180PS-00,02,TTP)		
R123,223,501,502	1-247-843-00	RES,CARBON 3.3K 5% 1/6W
R113,117,119,213,217, 219,313,317,319	1-247-847-00	RES,CARBON 4.7K 5% 1/6W
R108,208,308	1-247-849-00	RES,CARBON 5.6K 5% 1/6W
R109,111,209,211,309, 311,323,642	1-247-851-00	RES,CARBON 6.8K 5% 1/6W
R324,510	1-247-857-00	RES,CARBON 12K 5% 1/6W
R503	1-247-859-00	RES,CARBON 15K 5% 1/6W
R103,203,303	1-247-861-00	RES,CARBON 18K 5% 1/6W
R107,112,122,125,207, 212,222,225,307,312, 322,325,512,513,519, 525	1-247-863-00	RES,CARBON 22K 5% 1/6W
R124,224	1-247-867-00	RES,CARBON 33K 5% 1/6W
R526,701	1-247-871-00	RES,CARBON 47K 5% 1/6W
R126,130,226,230,326, 330,522,703	1-247-879-00	RES,CARBON 100K 5% 1/6W
R114,214,314	1-247-887-00	RES,CARBON 220K 5% 1/6W
R521,702	1-247-893-00	RES,CARBON 390K 5% 1/6W
R604,624	1-247-897-00	RES,CARBON 560K 5% 1/6W
R504,644,684	1-247-903-00	RES,CARBON 1M 5% 1/6W
L301	1-408-423-00	INDUCTOR,MICRO,150 5%
L101,201	1-408-427-00	INDUCTOR,MICRO,330 5%
L501,681	1-408-428-00	INDUCTOR,MICRO,390 5%
LV101,201,301	1-407-301-00	INDUCTOR,VAR,9mH

Ref.No. or Q'ty	Part No.	Description
(AP-12 BOARD,2000PS-00,02,10,12/2180PS-00,02,TTP)		
L102,202	1-407-502-00	INDUCTOR,MICRO,6.8mH 5%
RY501	1-515-477-00	RELAY,12V
RY101,201,301	1-515-518-00	RELAY,5V
FB1,2	1-535-178-00	FERRITE BEAD
CN361M	() 1-560-302-00	RECEP,5P,MALE
CN360M	() 1-560-304-00	RECEP,8P,MALE
CN363M	() 1-560-305-00	RECEP,10P,MALE
CN364M	() 1-560-306-00	RECEP,12P,MALE
CN354M,355M	() 1-560-310-00	RECEP,4P,MALE
CN353M	() 1-560-311-00	RECEP,5P,MALE
CN351M	() 1-560-312-00	RECEP,6P,MALE
CN356M	() 1-560-313-00	RECEP,8P,MALE
CN357M	() 1-560-314-00	RECEP,10P,MALE
CN350M,352M	() 1-560-315-00	RECEP,12P,MALE
TP101,102,103,201,202, 203,301,302,303,501	() 3-673-703-01	TERMINAL,TP
TPE101,102,201,202,301, 302,501	() 3-657-703-01	TERMINAL,TP
2pcs	7-686-527-01	SCREW,PSW 3x6
D101,201,301,501,502, 503,504,701	8-719-815-55	DIODE 1S1555
D505,D506,D507	8-719-930-33	LED,GL3PR3,RED
Q102,103,202,203,302, 303	8-729-102-35	TRANSISTOR 2SK162
Q101,105,106,201,205, 206,301,305,306	8-729-307-58	TRANSISTOR 2SC1775A

Ref.No. or Q'ty	Part No.	Description
(AP-12 BOARD,2000PS-00,02,10,12/2180PS-00,02,TTP)		
Q109,209,309,602,622, 642	8-729-373-92	TRANSISTOR 2SB739
Q108,208,308,501,601, 621,641	8-729-378-84	TRANSISTOR 2SD788
Q107,207,307	8-729-387-28	TRANSISTOR 2SA872-E
Q104,204,304	8-729-679-82	TRANSISTOR 2SA798
IC501,601,602,603,605	8-759-602-01	IC M5220P
IC101,201,301	8-759-745-59	IC NJM4559D
IC502	8-759-990-82	IC TL082CP
Q502	8-761-622-00	TRANSISTOR 2SC1636
Q503,701	8-769-192-00	TRANSISTOR 2SK43-2

AP-12 BOARD (BVH-2000PS-04,14/2180PS-04/TTP)

1pc (for 04,14 model)

() A-6013-069-A COMPLETE PCB,AP-12

(This assembly includes the following parts.)

C116,216,316,416	1-102-106-00	CAP,CERAMIC 100PF 10% 50V
C101,201,401	1-107-042-00	CAP,MICA 2.2PF +/-0.5PF 500V
C106,206,306,406	1-107-204-00	CAP,MICA 12PF 5% 500V

Ref.No. or Q'ty	Part No.	Description
(AP-12 BOARD,2000PS-04,14/2180PS-04,TTP)		
C301	1-107-208-00	CAP,MICA 18PF 5% 500V
C503,686	1-108-560-00	CAP,MYLAR 0.0016 5% 50V
C117,217,417	1-109-528-00	CAP,MICA 51PF 5% 100V
C317,322	1-109-531-00	CAP,MICA 68PF 5% 100V
C114,214,414	1-109-534-00	CAP,MICA 91PF 5% 100V
C314	1-109-545-00	CAP,MICA 270PF 5% 100V
C681	1-109-547-00	CAP,MICA 330PF 5% 100V
C102,202,402,601,621, 661	1-109-549-00	CAP,MICA 390PF 5% 100V
C703	1-109-556-00	CAP,MICA 620PF 5% 100V
C121,221,421	1-109-588-00	CAP,MICA 0.002 5% 500V
C321	1-109-595-00	CAP,MICA 0.0039 5% 500V
C113,213,313,413	1-109-668-00	CAP,MICA 62PF 5% 500V
C702	1-124-002-11	CAP,ELECT,NONPOLAR 1 50V
C701	1-124-006-11	CAP,ELECT,NONPOLAR 10 50V
C1,2,110,111,210,211, 310,311,410,411	1-124-445-00	CAP,ELECT 100 20% 16V
C104,204,304,404,610, 613,630,633,650,653, 670,673,684,685	1-124-477-11	CAP,ELECT 47 20% 25V
C119,120,219,220,319, 320,419,420,504,505, 507,508,604,605,624, 625,644,645,664,665	1-124-896-00	CAP,ELECT 33 20% 16V
C689	1-124-907-00	CAP,ELECT 10 20% 50V

Ref.No. or Q'ty	Part No.	Description
(AP-12 BOARD,2000PS-04,14/2180PS-04,TTP)		
C641	1-130-473-00	CAP,MYLAR 0.0015 5% 50V
C704	1-130-477-00	CAP,MYLAR 0.0033 5% 50V
C506	1-130-479-00	CAP,MYLAR 0.0047 5% 50V
C642	1-130-483-00	CAP,MYLAR 0.01 5% 50V
C682	1-130-485-00	CAP,MYLAR 0.015 5% 50V
C602,622,662	1-130-487-00	CAP,MYLAR 0.022 5% 50V
C107,207,307,407	1-130-495-00	CAP,MYLAR 0.1 5% 50V
C510	1-130-497-00	CAP,MYLAR 0.15 5% 50V
C108,115,208,215,308, 315,408,415	1-131-351-00	CAP,TANT 4.7 10% 35V
C118,218,318,418,513, 609,629,649,669	1-131-353-00	CAP,TANT 10 10% 35V
C514	1-131-381-00	CAP,TANT 47 20% 10V
C519	1-131-427-00	CAP,TANT 220 20% 6.3V
C105,205,305,405,518, 608,628,648,668	1-131-429-00	CAP,TANT 470 20% 3.15V
C3,4,103,109,112,203, 209,212,303,309,312, 403,409,412,611,612, 631,632,651,652,671, 672	1-161-055-00	CAP,CERAMIC 0.022 10% 50V
C11,12,13	1-163-168-00	CAP,CHIP CERAMIC 30PF 5% 50V
R516	1-210-828-00	RES,CARBON 4.7M 5% 1/4W
R524	1-215-412-00	RES,METAL 430 1% 1/6W
R329,332	1-215-418-00	RES,METAL 750 1% 1/6W
R302	1-215-428-00	RES,METAL 2K 1% 1/6W
R101,201,301,401	1-215-440-00	RES,METAL 6.2K 1% 1/6W

Ref.No. or Q'ty	Part No.	Description
(AP-12 BOARD,2000PS-04,14/2180PS-04,TTP)		
R110,210,310,410,682	1-215-442-00	RES,METAL 7.5K 1% 1/6W
R511	1-215-448-00	RES,METAL 13K 1% 1/6W
R102,202,402,602,622, 662	1-215-454-00	RES,METAL 24K 1% 1/6W
R127,128,227,228,327, 328,427,428	1-215-462-00	RES,METAL 51K 1% 1/6W
R520	1-215-470-00	RES,METAL 110K 1% 1/6W
R115,116,215,216,315, 316,415,416	1-247-783-00	RES,CARBON 10 5% 1/6W
R605,625,645,665	1-247-793-00	RES,CARBON 27 5% 1/6W
R105,205,305,405,685	1-247-799-00	RES,CARBON 47 5% 1/6W
R118,218,318,418	1-247-803-00	RES,CARBON 68 5% 1/6W
R106,120,121,206,220, 221,306,320,321,406, 420,421,509,517,688, 689	1-247-807-00	RES,CARBON 100 5% 1/6W
R131,231,331,431	1-247-815-00	RES,CARBON 220 5% 1/6W
R606,626,646,666,686	1-247-817-00	RES,CARBON 270 5% 1/6W
R601,621,661	1-247-827-00	RES,CARBON 680 5% 1/6W
R507,508,518,608,609, 628,629,648,649,668, 669,681	1-247-831-00	RES,CARBON 1K 5% 1/6W
R514,641	1-247-833-00	RES,CARBON 1.2K 5% 1/6W
R129,132,133,229,232, 233,333,429,432,433, 523	1-247-835-00	RES,CARBON 1.5K 5% 1/6W

Ref.No. or Q'ty	Part No.	Description
(AP-12 BOARD,2000PS-04,14/2180PS-04,TTP)		
R104,204,304,404,505	1-247-839-00	RES,CARBON 2.2K 5% 1/6W
R123,223,423,501,502	1-247-843-00	RES,CARBON 3.3K 5% 1/6W
R113,117,119,213,217, 219,313,317,319,413, 417,419	1-247-847-00	RES,CARBON 4.7K 5% 1/6W
R108,208,308,408	1-247-849-00	RES,CARBON 5.6K 5% 1/6W
R109,111,209,211,309, 311,323,409,411,642	1-247-851-00	RES,CARBON 6.8K 5% 1/6W
R324,510	1-247-857-00	RES,CARBON 12K 5% 1/6W
R511	1-247-858-00	RES,CARBON 13K 5% 1/6W
R503	1-247-859-00	RES,CARBON 15K 5% 1/6W
R103,203,303,403	1-247-861-00	RES,CARBON 18K 5% 1/6W
R107,112,122,125,207, 212,222,225,307,312, 322,325,407,412,422, 425,512,513,519,525	1-247-863-00	RES,CARBON 22K 5% 1/6W
R124,224,424	1-247-867-00	RES,CARBON 33K 5% 1/6W
R526,701	1-247-871-00	RES,CARBON 47K 5% 1/6W
R126,130,226,230,326, 330,426,430,522,703	1-247-879-00	RES,CARBON 100K 5% 1/6W
R114,214,314,414	1-247-887-00	RES,CARBON 220K 5% 1/6W
R521,702	1-247-893-00	RES,CARBON 390K 5% 1/6W
R604,624,664	1-247-897-00	RES,CARBON 560K 5% 1/6W

Ref.No. or Q'ty	Part No.	Description
(AP-12 BOARD,2000PS-04,14/2180PS-04,TTP)		
R504,644,684	1-247-903-00	RES,CARBON 1M 5% 1/6W
L301	1-408-423-00	INDUCTOR,MICRO,150 5%
L101,201,401	1-408-427-00	INDUCTOR,MICRO,330 5%
L501,681	1-408-428-00	INDUCTOR,MICRO,390 5%
LV101,201,301,401	1-407-301-00	INDUCTOR,VAR,9mH
L102,202,402	1-407-502-00	INDUCTOR,MICRO,6.8mH 5%
RY501	1-515-477-00	RELAY,12V
RY101,201,301,401	1-515-518-00	RELAY,5V
FB1,2	1-535-178-00	FERRITE BEAD
CN362M	() 1-560-301-00	RECEP,4P,MALE
CN361M,365M	() 1-560-302-00	RECEP,5P,MALE
CN360M	() 1-560-304-00	RECEP,8P,MALE
CN363M	() 1-560-305-00	RECEP,10P,MALE
CN364M	() 1-560-306-00	RECEP,12P,MALE
CN354M,355M	() 1-560-310-00	RECEP,4P,MALE
CN353M	() 1-560-311-00	RECEP,5P,MALE
CN351M	() 1-560-312-00	RECEP,6P,MALE
CN356M	() 1-560-313-00	RECEP,8P,MALE
CN357M	() 1-560-314-00	RECEP,10P,MALE
CN350M,352M	() 1-560-315-00	RECEP,12P,MALE
TP101,102,103,201,202, 203,301,302,303,401, 402,403,501	() 3-657-703-01	TERMINAL,TP

Ref.No. or Q'ty	Part No.	Description
(AP-12 BOARD,2000PS-04,14/2180PS-04,TTP)		
TPE101,102,201,202,301, 302,401,402,501		
()	3-673-805-11	TERMINAL,TP
2pcs	7-686-527-01	SCREW,PSW3x6
D101,201,301,401,501, 502,503,504,701	8-719-815-55	DIODE 1S1555
D505,506,507	8-719-930-33	LED GL3PR3,LED
Q102,103,202,203,302, 303,402,403	8-729-102-35	TRANSISTOR 2SK162
Q101,105,106,201,205, 206,301,305,306,401, 405,406	8-729-307-58	TRANSISTOR 2SC1775A
Q109,209,309,409,602, 622,642,662	8-729-373-92	TRANSISTOR 2SB739
Q108,208,308,408,501, 601,621,641,661	8-729-378-84	TRANSISTOR 2SD788
Q107,207,307,407	8-729-387-28	TRANSISTOR 2SA872-E
Q104,204,304,404	8-729-679-82	TRANSISTOR 2SA798
IC501,601,602,603,604, 605	8-759-602-01	IC M5220P
IC101,201,301,401	8-759-745-59	IC NJM4559D
IC502	8-759-990-82	IC TL082CP
Q502	8-761-622-00	TRANSISTOR 2SC1636
Q503,701	8-769-192-00	TRANSISTOR 2SK43-2

Ref.No. or Q'ty	Part No.	Description
BE-02 BOARD (BVH-2000PS,2180PS/TTP)		
1pc (for 00/02 model)		
()	A-6013-045-B	COMPLETE PCB,BE-02
1pc (for 04 model)		
()	A-6013-053-B	COMPLETE PCB,BE-02
1pc (for 10/12 model)		
()	A-6013-076-A	COMPLETE PCB,BE-02
1pc (for 14 model)		
()	A-6013-075-A	COMPLETE PCB,BE-02
(These ass'ies include the following parts.)		
Q16&17,20&21		
	X-3673-687-0	TRANSISTOR KIT
	This part is the kit of 2SD774-3 and 2SB734-3.	
	Replace the following two transistors at the same time.	
	Q16&17 Q20&21	
	2SD774-3 should be used for Q16 and 20.	
	2SB734-3 should be used for Q17 and 21.	
Q3&4,103&104,203&204, 303&304,403&404		
	X-3673-694-0	TRANSISTOR KIT
	This part is the kit of 2SC2690A-Q and 2SA1220A-Q or 2SC2690A-P and 2SA1220A-P.	
	Replace the following two transistors at the same time.	
	Q3&4 Q103&104 Q203&204 Q303&304 Q403&404	
	2SC2690A-Q or 2SC2690-A-P should be used for Q3,103,203,303 and 403.	
	2SA1220A-Q or 2SA1220A-P should be used for Q4,104,204,304 and 404.	
C60	1-102-074-00	CAP,CERAMIC 0.001 10% 50V
C50	1-107-044-00	CAP,MICA 3.3PF +/-0.5PF 500V
C46	1-107-077-51	CAP,MICA 47PF 5% 500V
C3(for 04/14 model), 4(for 04/14 model)	1-107-173-00	CAP,MICA 150PF 5% 500V
C3(for 00/02/10/12 model), 1,2	1-107-181-00	CAP,MICA 330PF 5% 500V

Ref.No. or Q'ty	Part No.	Description
(BE-02 BOARD,TTP)		
C19,20,21,22,109,110, 111,112,209,210,211, 212,309,310,311,312, 409,410,411,412	1-107-202-00	CAP,MICA 10PF 5% 500V
C101,201,301,401	1-108-563-00	CAP,MYLAR 0.0022 5% 50V
C31	1-108-567-00	CAP,MYLAR 0.0033 5% 50V
C12	1-108-573-00	CAP,MYLAR 0.0056 5% 50V
C14	1-108-575-00	CAP,MYLAR 0.0068 5% 50V
C23,24,113,114,213,214, 313,314,413,414	1-108-579-00	CAP,MYLAR 0.01 5% 50V
C102,202,302,402	1-108-583-00	CAP,MYLAR 0.015 5% 50V
C16,106,206,306,406	1-108-587-00	CAP,MYLAR 0.022 5% 50V
C17,107,207,307,407	1-109-542-00	CAP,MICA 220PF 5% 100V
C5	1-109-576-00	CAP,MICA 620PF 5% 500V
C25	1-109-577-00	CAP,MICA 680PF 5% 500V
C6	1-109-589-00	CAP,MICA 0.0022 5% 500V
C18,47,108,208,308,408	1-109-678-00	CAP,MICA 160PF 1% 500V
C32,33	1-109-689-00	CAP,MICA 470PF 5% 500V
C35,37	1-123-323-00	CAP,ELECT 470 16V
C26,28,39,52,54,115,117, 215,217,315,317,415, 417	1-123-332-00	CAP,ELECT 47 25V
C11,13,48,49,103,104, 203,204,303,304,403, 404	1-123-356-00	CAP,ELECT 10 50V
C15,34,105,205,305,405	1-123-380-00	CAP,ELECT 1 100V

Ref.No. or Q'ty	Part No.	Description
(BE-02 BOARD,TTP)		
C30	1-131-346-00	CAP,TANT 0.68 10% 35V
C45	1-131-347-00	CAP,TANT 1 10% 35V
C10	1-131-350-00	CAP,TANT 3.3 10% 35V
C7,8,9	1-131-353-00	CAP,TANT 10 10% 35V
CV4 (for 04/14 model), 1,2,3,5	1-141-155-00	CAP,TRIMMER 600PF
C27,29,36,38,40,41,42, 43,44,51,53,116,118, 216,218,316,318,416, 418	1-161-055-00	CAP,CERAMIC 0.022 10% 50V
R420	1-214-096-00	RES,METAL 33 1% 1/6W
R64,69	1-215-373-00	RES,METAL 10 1% 1/6W
R55,56	1-215-397-00	RES,METAL 100 1% 1/6W
R13,15	1-215-407-00	RES,METAL 270 1% 1/6W
R1,2,34,80,103,203,303, 403	1-215-413-00	RES,METAL 470 1% 1/6W
R4,7,10,14,20,22,25,42, 45,46,106,109,206,209, 306,309,406,409	1-215-421-00	RES,METAL 1K 1% 1/6W
R21,105,205,305,405	1-215-423-00	RES,METAL 1.2K 1% 1/6W
R35,36	1-215-428-00	RES,METAL 2K 1% 1/6W
R5,8,11,23,24,107,108, 207,208,307,308,407, 408	1-215-429-00	RES,METAL 2.2K 1% 1/6W
R49 (for 04/14 model), 50 (for 04/14 model), 44	1-215-433-00	RES,METAL 3.3K 1% 1/6W
R3,6,9,12,32,33,43,60, 61,65,66,101,104,201, 204,301,304,401,404	1-215-437-00	RES,METAL 4.7K 1% 1/6W
R30	1-215-441-00	RES,METAL 6.8K 1% 1/6W

Ref.No. or Q'ty	Part No.	Description
(BE-02 BOARD,TTP)		
R48 (for 04/14 model), 29,31,37,38,52,113,213, 313,413	1-215-445-00	RES,METAL 10K 1% 1/6W
R112,212,312,412	1-215-447-00	RES,METAL 12K 1% 1/6W
R47 (for 04/14 model), 17,28,57,58,59	1-215-453-00	RES,METAL 22K 1% 1/6W
R16	1-215-455-00	RES,METAL 27K 1% 1/6W
R53,75	1-215-461-00	RES,METAL 47K 1% 1/6W
R54,76	1-215-463-00	RES,METAL 56K 1% 1/6W
R18	1-215-477-00	RES,METAL 220K 1% 1/6W
R102,202,302,402	1-215-483-00	RES,METAL 390K 1% 1/6W
RV6	1-228-455-00	RES,VAR,CERMET 500
RV8	1-228-461-00	RES,VAR,CERMET 50K
RV11 (for 04/14 model), 10	1-230-834-11	RES,VAR,METAL 10
RV1	1-230-837-11	RES,VAR,METAL 100
RV2,3,4,5	1-230-839-11	RES,VAR,METAL 500
RV9	1-230-844-11	RES,VAR,METAL 20K
R189 (for 04/14 model)		
(One of the following resistor is used.)		
	1-247-071-00	RES,CARBON 1 5% 1/4W
	1-247-075-00	RES,CARBON 2.2 5% 1/4W
	1-247-077-00	RES,CARBON 3.3 5% 1/4W
	1-247-079-00	RES,CARBON 4.7 5% 1/4W
	1-247-081-00	RES,CARBON 6.8 5% 1/4W
	1-247-083-00	RES,CARBON 10 5% 1/4W
R41,51	1-247-071-00	RES,CARBON 1 5% 1/4W
R189 (for 00/10/02/12 model)	1-247-075-00	RES,CARBON 2.2 5% 1/4W

Ref.No. or Q'ty	Part No.	Description
(BE-02 BOARD,TTP)		
R26,27,62,63,67,68,110, 111,210,211,310,311, 410,411	1-247-077-00	RES,CARBON 3.3 5% 1/4W
R39,40	1-247-105-00	RES,CARBON 82 5% 1/4W
LV1	1-407-261-00	INDUCTOR,VAR 100
LV2 (for 04/14 model)	1-407-262-00	INDUCTOR,VAR 150
LV3	1-407-284-00	INDUCTOR,VAR 1mH
LV4,5,6,7,8	1-407-297-00	INDUCTOR,VAR 3.5mH
L2	1-407-499-00	INDUCTOR,MICRO,3.9mH 5%
L1 (for 04/14 model)	1-408-424-00	INDUCTOR,MICRO,180 5%
T1	1-433-196-00	TRANSFORMER,BIAS
RY1 (for 04/14 model)	1-515-196-00	RELAY,12V 250-OHM
X1	1-527-478-00	CRYSTAL,14.31818MHz
CN384M,387M	() 1-560-301-00	RECEP,4P,MALE
CN386M	() 1-560-302-00	RECEP,5P,MALE
CN381M,383M	() 1-560-303-00	RECEP,6P,MALE
CN388M	() 1-560-304-00	RECEP,8P,MALE
CN382M	() 1-560-305-00	RECEP,10P,MALE
CN385M	() 1-560-725-00	RECEP,16P,MALE

Ref.No. or Q'ty	Part No.	Description
(BE-02 BOARD,TTP)		
TH101,201,301,401	1-800-198-XX	THERMISTOR,S-1K
TP10 (for 04/14 model) 1,2,3,4,6,7,8,9,11,12, 13,14,15,16	() 3-657-703-01	TERMINAL,TP
TPE1,2,3,4	() 3-673-805-11	TERMINAL,TP
D10 (for 04/14 model) 6,7,8,101,102,103,201, 202,203,301,302,303, 401,402,403	8-719-815-55	DIODE 1S1555
D1,2,3,4,5,9,104,105, 204,205,304,305,404, 405	8-719-911-06	DIODE 1SS106
Q8,9,10	8-729-169-02	TRANSISTOR 2SC2690A
Q12 (for 04/14 model) 2,6,7,14,18,102,202, 302,402	8-729-602-68	TRANSISTOR 2SA1026-8
Q13 (for 04/14 model) 1,5,11,15,19,101,201, 301,401	8-729-606-32	TRANSISTOR 2SC2603
IC7	8-759-045-84	IC MC14584BCP,CMOS
IC4,5,6	8-759-900-32	IC SN74LS32N,TTL
IC8	8-759-900-59	IC HI1-201,CMOS
IC1	8-759-903-93	IC SN74LS393N,TTL
IC2	8-759-942-65	IC SN74265N,TTL
IC3	8-759-974-06	IC SN7406N,TTL
IC9,10,11,101,201,301, 401	8-759-990-82	IC TL082CP

Ref.No. or Q'ty	Part No.	Description
BE-03 BOARD (BVH-2000PS-00,02,10,12/2180PS-00,02)		
1pc (for 00/02/10/12 model)	() A-6013-046-A	COMPLETE PCB,BE-03
(This assembly includes the following parts.)		
C101,201,301	1-108-559-00	CAP,MYLAR 0.0015 5% 50V
C102,202,302	1-108-575-00	CAP,MYLAR 0.0068 5% 50V
C11,12,13,14,15,16	1-108-587-00	CAP,MYLAR 0.022 5% 50V
C20,21,22	1-108-603-00	CAP,MYLAR 0.1 5% 50V
C32,33	1-109-575-00	CAP,MICA 560PF 5% 500V
C34	1-109-577-00	CAP,MICA 680PF 5% 500V
C10,19	1-123-321-00	CAP,ELECT 220 16V
C5	1-123-356-00	CAP,ELECT 10 50V
C28,29,30	1-123-379-00	CAP,ELECT 0.47 100V
C103,203,303	1-123-380-00	CAP,ELECT 1 100V
C6,7,8	1-131-349-00	CAP,TANT 2.2 10% 35V
C24,25,26	1-131-350-00	CAP,TANT 3.3 10% 35V
R102,202,302	1-215-413-00	RES,METAL 470 1% 1/6W
R71,72	1-215-421-00	RES,METAL 1K 1% 1/6W
R107,207,307	1-215-429-00	RES,METAL 2200 1% 1/6W
R104,204,304	1-215-433-00	RES,METAL 3300 1% 1/6W
R106,206,306	1-215-445-00	RES,METAL 10K 1% 1/6W

Ref. No. or Q'ty	Part No.	Description
(BE-03 BOARD, 2000PS-00, 02, 10, 12/2180PS-00, 02, TTP)		
R103, 203, 303	1-215-453-00	RES, METAL 22K 1% 1/6W
R65, 66	1-247-083-00	RES, CARBON 10 5% 1/4W
R67	1-247-103-00	RES, CARBON 68 5% 1/4W
R53, 54, 55, 57, 58, 59	1-247-807-00	RES, CARBON 100 5% 1/6W
R46, 48, 50	1-247-823-00	RES, CARBON 470 5% 1/6W
R61, 62, 63	1-247-830-00	RES, CARBON 910 5% 1/6W
R37, 39, 41	1-247-831-00	RES, CARBON 1K 5% 1/6W
R17, 18, 19, 20, 21, 22	1-247-835-00	RES, CARBON 1.5K 5% 1/6W
	1-247-839-00	RES, CARBON 2.2K 5% 1/6W
R29, 31	1-247-852-00	RES, CARBON 7.5K 5% 1/6W
R25, 26, 27, 33	1-247-855-00	RES, CARBON 10K 5% 1/6W
R45, 47, 49	1-247-856-00	RES, CARBON 11K 5% 1/6W
R13, 14, 15	1-247-861-00	RES, CARBON 18K 5% 1/6W
R101, 201, 301	1-247-893-00	RES, CARBON 390K 5% 1/6W
LV1, 2	1-407-285-00	INDUCTOR, VAR, 1.5mH
LV3	1-407-286-00	INDUCTOR, VAR, 2.2mH
T1, 2, 3	1-433-196-00	TRANSFORMER, BIAS
CN376M ()	1-560-300-00	RECEP, 3P, MALE
CN373M, 374M ()	1-560-302-00	RECEP, 5P, MALE

Ref. No. or Q'ty	Part No.	Description
(BE-03 BOARD, 2000PS-00, 02, 10, 12/2180PS-00, 02, TTP)		
CN371M, 372M ()	1-560-303-00	RECEP, 6P, MALE
CN375M ()	1-560-304-00	RECEP, 8P, MALE
TH1, 2, 3	1-800-200-00	THERMISTOR, S-3K
TP11, 12, 21, 22, 31, 32 ()	3-640-328-00	TERMINAL, TP
TPE1 ()	3-673-805-11	TERMINAL, TP
D101, 201, 301	8-719-815-55	DIODE 1S1555
Q5, 6, 7, 102, 202, 302	8-729-117-54	TRANSISTOR 2SA1175
Q9, 10, 11, 12, 13, 14	8-729-177-43	TRANSISTOR 2SD774
Q17, 18, 19	8-729-600-27	TRANSISTOR 2SC1364-7
Q101, 201, 301	8-729-606-32	TRANSISTOR 2SC2603
IC1, 2, 3	8-759-990-82	IC TL082CP

BE-03 BOARD (BVH-2000PS-04, 14/2180PS-04/TTP)

1pc (for 04, 14 model)

()	A-6013-054-A	COMPLETE PCB, BE-03

(This assembly includes the following parts.)

C101, 201, 301, 401	1-108-559-00	CAP, MYLAR 0.0015 5% 50V
C102, 202, 302, 402	1-108-575-00	CAP, MYLAR 0.0068 5% 50V
C11, 12, 13, 14, 15, 16, 17, 18	1-108-587-00	CAP, MYLAR 0.022 5% 50V

Ref.No. or Q'ty	Part No.	Description
(BE-03 BOARD,2000PS-04,14/2180PS-04,TTP)		
C32,33,35	1-109-575-00	CAP,MICA 560PF 5% 500V
C34	1-109-577-00	CAP,MICA 680PF 5% 500V
C10,19	1-123-321-00	CAP,ELECT 220 16V
C5	1-123-356-00	CAP,ELECT 10 25V
C28,29,30,31	1-123-379-00	CAP,ELECT 0.47 50V
C103,203,303,403	1-123-380-00	CAP,ELECT 1 50V
C20,21,22,23	1-130-495-00	CAP,MYLAR 0.1 5% 50V
C6,7,8,9	1-131-349-00	CAP,TANT 2.2 10% 35V
C24,25,26,27	1-131-350-00	CAP,TANT 3.3 10% 35V
R102,202,302,402	1-215-413-00	RES,METAL 470 1% 1/6W
R71,72	1-215-421-00	RES,METAL 1K 1% 1/6W
R107,207,307,407	1-215-429-00	RES,METAL 2200 1% 1/6W
R104,204,304,404	1-215-433-00	RES,METAL 3300 1% 1/6W
R106,206,306,406	1-215-445-00	RES,METAL 10K 1% 1/6W
R103,203,303,403	1-215-453-00	RES,METAL 22K 1% 1/6W
C65,66,68	1-247-083-00	RES,CARBON 10 5% 1/4W
R67	1-247-103-00	RES,CARBON 68 5% 1/4W
R53,54,55,56,57,58,59, 60	1-247-807-00	RES,CARBON 100 5% 1/6W

Ref.No. or Q'ty	Part No.	Description
(BE-03 BOARD,2000PS-04,14/2180PS-04,TTP)		
R46,48,50,52	1-247-823-00	RES,CARBON 470 5% 1/6W
R61,62,63,64	1-247-830-00	RES,CARBON 910 5% 1/6W
R37,39,41,43	1-247-831-00	RES,CARBON 1K 5% 1/6W
R17,18,19,20,21,22,23, 24	1-247-835-00	RES,CARBON 1.5K 5% 1/6W
R30,32,34,36,38,40,42, 44	1-247-839-00	RES,CARBON 2.2K 5% 1/6W
R29,31,35	1-247-852-00	RES,CARBON 7.5K 5% 1/6W
R25,26,27,28,33	1-247-855-00	RES,CARBON 10K 5% 1/6W
R45,47,49,51	1-247-856-00	RES,CARBON 11K 5% 1/6W
R13,14,15,16	1-247-861-00	RES,CARBON 18K 5% 1/6W
R101,201,301,401	1-247-893-00	RES,CARBON 390K 5% 1/6W
LV1,2,4	1-407-285-00	INDUCTOR,VAR,1.5mH
LV3	1-407-286-00	INDUCTOR,VAR,2.2mH
T1,2,3,4	1-433-196-00	TRANSFORMER,BIAS
CN376M ()	1-560-300-00	RECEP,3P,MALE
CN373M,374M ()	1-560-302-00	RECEP,5P,MALE
CN371M,372M ()	1-560-303-00	RECEP,6P,MALE

Ref.No. or Q'ty	Part No.	Description
(BE-03 BOARD,2000PS-04,14/2180PS-04,TTP)		
CN375M	() 1-560-304-00	RECEP,8P,MALE
TH1,2,3,4	1-800-200-00	THERMISTOR,S-3K
TP11,12,21,22,31,32,41, 42	3-640-328-00	TERMINAL,TP
TPE1	3-673-805-11	TERMINAL,TP
D101,201,301,401	8-719-815-55	DIODE 1S1555
Q5,6,7,8,102,202,302, 402	8-729-117-54	TRANSISTOR 2SA1175
Q9,10,11,12,13,14,15,16	8-729-177-43	TRANSISTOR 2SD774
Q17,18,19,20	8-729-600-27	TRANSISTOR 2SC634-7
Q101,201,301,401	8-729-606-32	TRANSISTOR 2SC2603
IC1,2,3	8-759-990-82	IC TL082CP

BE-04 BOARD (BVH-2000PS,2180PS/TTP)

1pc	() 1-606-676-00	PC BOARD,BE-04, WITHOUT COMPONENT
RV4 (for 04/14 model), 1,2,3	1-224-945-00	RES,VAR,METAL 200
CN377M	() 1-560-302-00	RECEP,5P,MALE
1pc (for 00/02/10/12 model)	3-644-002-00	CUSHION,HANDLE
2pcs	7-621-981-15	SCREW,PSW 2.6x6

Ref.No. or Q'ty	Part No.	Description
DR-13 BOARD (BVH-2000PS-02,04,12,14/2180PS-02,04)		
1pc (for 02/04/12/14 model)	() A-6049-008-A	COMPLETE PCB,DR-13
(This assembly includes the following parts.)		
C2,3,4	1-131-522-00	CAP,TANT 10 20% 25V
C1	1-131-526-00	CAP,TANT 33 20% 10V
R3	1-247-884-00	RES,CARBON 160K 5% 1/6W
R4	1-247-783-00	RES,CARBON 10 5% 1/6W
R2	1-247-831-00	RES,CARBON 1K 5% 1/6W
R1	1-247-838-00	RES,CARBON 2K 5% 1/6W
L1,2,3	1-408-096-00	INDUCTOR,MICRO,470 5%
34pcs	1-560-240-00	CONTACT
2pcs	7-621-259-42	SCREW +P 2.6x6
2pcs	7-682-147-13	SCREW +P 3x6
2pcs	7-684-023-01	NUT,M3
4pcs	7-688-003-13	WASHER,M3,MIDDLE
D2,3	8-719-109-07	DIODE RD39E-B
D1,4	8-719-900-95	DIODE V09G
D5,6,7,8	8-719-911-19	DIODE 1SS119
IC2,3	8-741-115-62	IC BX1156B
IC1	8-759-377-43	IC HA17741GS
Q1	8-769-194-00	TRANSISTOR 2SK43-4

DR-20 BOARD (BVH-2000PS-00,10/2180PS-00)

1pc (for 00/10 model)	() A-6010-070-A	MOUNTED PCB,DR-20
(This assembly includes the following parts.)		
17pcs	1-560-240-00	CONTACT

Ref.No. or Q'ty	Part No.	Description

SL-07 BOARD (BVH-2000PS-02,04,12,14/2180PS-02,04)

1pc (for 02/04/12/14 model)		
()	A-6026-023-B	MOUNTED PCB,SL-07
(This assembly includes the following parts.)		
7pcs	1-560-240-00	CONTACT

SL-08 BOARD (BVH-2000PS-02,04,12,14/2180PS-02,04)

1pc (for 02/04/12/14 model)		
	A-6709-428-B	MOUNTED PCB,SL-08

SL-09 BOARD (BVH-2000PS-02,04,12,14/2180PS-02,04)

1pc (for 02/04/12/14 model)		
	A-6709-429-C	MOUNTED PCB,SL-09
(This assembly includes the following parts.)		
1pc	1-508-937-00	RECEP,8P,MALE

Ref.No. or Q'ty	Part No.	Description

RP-09 BOARD (BVH-2000PS,2180PS/TTP)

1pc	() A-6011-063-A	COMPLETE PCB,RP-09
1pc	() A-6011-097-A	COMPLETE PCB,RP-09
	(For BVH-2000PS 10,12,14 model)	
(This assembly includes the following parts.)		
C6,7,37,38	1-107-158-00	CAP,MICA 30PF 5% 500V
C8,39	1-107-162-00	CAP,MICA 43PF 5% 500V
C5,16,36	1-108-567-00	CAP,MYLAR 0.0033 5% 50V
C49	1-108-595-00	CAP,MYLAR 0.047 5% 50V
C10,41		
(One of the following capacitors is used)		
	1-108-525-00	CAP,MICA 39PF 5% 100V
	1-109-528-00	CAP,MICA 51PF 5% 100V
C1,4	1-123-321-00	CAP,ELECT 220 16V
C35,66	1-123-330-00	CAP,ELECT 22 25V
C11,14,17,31,32,42,44, 47,62,63	1-123-333-00	CAP,ELECT 100 25V
C26,27,57,58	1-123-380-00	CAP,ELECT 1 100V
C9,13,15,18,19,20,21,23, 24,25,28,29,30,34,40, 43,46,48,50,51,52,54, 55,56,59,60,61,65,70	1-161-051-00	CAP,CERAMIC 0.01 10% 50V
C2,3,12,33,45,64	1-161-057-00	CAP,CERAMIC 0.033 10% 50V
C71	1-161-483-00	CAP,CERAMIC 0.1 10% 50V
R20,68	1-214-101-00	RES,METAL 51 1% 1/4W
R74,84	1-214-112-00	RES,METAL 150 1% 1/4W
RV1,3	1-224-934-00	RES,VAR,METAL 100
RV2,4	1-224-978-00	RES,VAR,METAL 50
R49,97	1-247-196-00	⚠ RES,CARBON 15 5% 1/2W
R30,31,78,79	1-247-211-00	⚠ RES,CARBON 62 5% 1/2W

Ref.No. or Q'ty	Part No.	Description
(RP-09 BOARD,TTP)		
R19,67	1-247-783-00	RES,CARBON 10 5% 1/6W
R5,6,53,54	1-247-787-00	RES,CARBON 15 5% 1/6W
R11,14,35,38,42,46,47, 61,64,82,85,90,93,95, 115,116	1-247-795-00	RES,CARBON 33 5% 1/6W
R18,50,51,57,98,99	1-247-800-00	RES,CARBON 51 5% 1/6W
R27,28,76,77	1-247-802-00	RES,CARBON 62 5% 1/6W
R22,32,34,37,69,80	1-247-807-00	RES,CARBON 100 5% 1/6W
R29,71	1-247-814-00	RES,CARBON 200 5% 1/6W
R12,13,60,62	1-247-816-00	RES,CARBON 240 5% 1/6W
R41,43,44,45,48,86,89, 91,92,94,96,101	1-247-818-00	RES,CARBON 300 5% 1/6W
R39,87	1-247-820-00	RES,CARBON 360 5% 1/6W
R8,21,26,33,36,55,81,83, 102,110,112	1-247-831-00	RES,CARBON 1K 5% 1/6W
R9,56	1-247-834-00	RES,CARBON 1.3K 5% 1/6W
R23,24,70,73,75	1-247-838-00	RES,CARBON 2K 5% 1/6W
R7,15,25,59,63,	1-247-842-00	RES,CARBON 3K 5% 1/6W
R17,52,65,72,100	1-247-848-00	RES,CARBON 5.1K 5% 1/6W
R10,58	1-247-854-00	RES,CARBON 9.1K 5% 1/6W
R1,2,3,4,16,66	1-247-855-00	RES,CARBON 10K 5% 1/6W

Ref.No. or Q'ty	Part No.	Description
(RP-09 BOARD,TTP)		
L1,2,3,4,6,7,8,9	1-407-169-XX	INDUCTOR,MICRO,100 5%
L5,10	1-407-177-XX	INDUCTOR,MICRO,470 5%
LV1,2	1-408-660-00	INDUCTOR,VAR,1.8
T1,2,3,4	1-427-519-00	TRANSFORMER,OUTPUT
RY1,2	1-515-309-21	RELAY,12V 1K-OHM
FB1,2,3,4,5,6,7,8,9,10	1-535-178-00	FERRITE BEAD
CN263M,265M,267M,269M	() 1-560-300-00	RECEP,3P,MALE
CN262M	() 1-560-301-00	RECEP,4P,MALE
CN261M	() 1-560-302-00	RECEP,5P,MALE
CN264M,266M,268M,270M	1-561-365-00	RECEP,COAXIAL,MALE
TP2,4,5,6,8	() 3-673-772-41	TERMINAL,TP
8pcs	7-686-446-01	SCREW,PS 3x5
D1,2	8-719-815-55	DIODE 1S1555
Q1,2,4,8,9,10,16,20,21, 22	8-729-110-53	TRANSISTOR 2SA1005
Q5,6,11,12,17,18,23,24	8-729-125-20	TRANSISTOR 2SC1252
Q3,15	8-729-177-43	TRANSISTOR 2SD774
IC2,4	8-741-115-62	IC BX1156B
IC1,3	8-743-930-00	IC BX3930
Q7,13,14,19,25,26	8-765-300-00	TRANSISTOR 2SC2009

Ref. No. or Q'ty	Part No.	Description
DD-03 BOARD (BVH-2000PS-02, 04, 12, 14/2180PS-02, 04)		
1pc (for 02/04/12/14 model)		
	() A-6023-035-B	COMPLETE PCB, DD-03
(This assembly includes the following parts.)		
C4, 13	1-102-106-00	CAP, CERAMIC 100PF 10% 50V
C9	1-109-676-00	CAP, MICA 130PF 5% 500V
C6, 8, 10, 11	1-123-007-00	CAP, ELECT 4.7 350V
C5, 7	1-123-309-00	CAP, ELECT 330 10V
C1, 2, 12, 14	1-123-330-00	CAP, ELECT 22 25V
C16	1-130-483-00	CAP, MYLAR 0.01 5% 50V
C3, 15	1-161-055-00	CAP, CERAMIC 0.022 10% 50V
R5, 6	1-206-696-00 !	RES, METAL 22K 5% 2W
R10, 11	1-213-125-00 !	RES, METAL 33 5% 1W
RV1, 2	1-228-292-00	RES, VAR, CERMET 2K
CP1, 2	1-232-711-11	CIRCUIT BLOCK
CP3	1-232-712-11	CIRCUIT BLOCK
CP4	1-232-713-11	CIRCUIT BLOCK
CP5	1-232-714-11	CIRCUIT BLOCK
CP6	1-232-715-11	CIRCUIT BLOCK
CP7	1-232-716-11	CIRCUIT BLOCK
CP8	1-232-717-11	CIRCUIT BLOCK
CP9	1-232-718-11	CIRCUIT BLOCK
R4, 12	1-247-773-00	RES, CARBON 3.9 5% 1/6W
R7, 9	1-247-839-00	RES, CARBON 2.2K 5% 1/6W
R3, 15	1-247-851-00	RES, CARBON 6.8K 5% 1/6W
R1, 13	1-247-855-00	RES, CARBON 10K 5% 1/6W
R2, 14	1-247-859-00	RES, CARBON 15K 5% 1/6W
R16	1-247-871-00	RES, CARBON 47K 5% 1/6W
R8	1-247-879-00	RES, CARBON 100K 5% 1/6W
CN282M ()	1-560-302-00	RECAP, 5P, MALE
CN281M, 283M		
()	1-560-304-00	RECEP, 8P, MALE
TP1, 2, 3		
()	3-673-772-41	TERMINAL, TP

Ref. No. or Q'ty	Part No.	Description
(DD-03 BOARD, TTP)		
8pcs	7-686-528-01	SCREW, PSW 3x8
D1, 2, 5, 6	8-719-110-00	DIODE RD100E
D3, 4, 7, 8	8-719-900-95	DIODE V09G
D9	8-719-911-19	DIODE 1SS119
Q2	8-729-115-64	TRANSISTOR 2SA1156
Q3, 7	8-729-117-54	TRANSISTOR 2SA1175
Q14	8-729-175-22	TRANSISTOR 2SC2752
Q10, 15	8-729-178-54	TRANSISTOR 2SC2785
Q1, 6, 11, 13	8-729-204-94	TRANSISTOR 2SC3559
Q18, 19	8-719-900-89	TRANSISTOR DTC144ES
IC3	8-759-245-39	IC TC4539BP, CMOS
IC1, 2	8-759-377-23	IC HA17723G
Q4, 8, 9, 12	8-729-141-78	TRANSISTOR 2SC3632-K
Q5, 16, 17	8-729-118-43	TRANSISTOR 2SA1413-L

DA-07 BOARD (BVH-2000PS, 2180PS/TTP)		
1pc	() A-6015-065-A	COMPLETE PCB, DA-07
(This assembly includes the following parts.)		
C34	1-101-810-00	CAP, CERAMIC 100PF 5% 500V
C33, 36, 37, 38	1-102-106-00	CAP, CERAMIC 100PF 10% 50V
C1, 20	1-123-307-00	CAP, ELECT 100 10V
C13, 17	1-123-333-00	CAP, ELECT 100 25V
C29	1-123-356-00	CAP, ELECT 10 50V
C4	1-123-379-00	CAP, ELECT 0.47 100V
C12	1-123-388-00	CAP, ELECT 100 100V

Ref.No. or Q'ty	Part No.	Description
(DA-07 BOARD,TTP)		
C5,35	1-130-483-00	CAP,MYLAR 0.01 5% 50V
C25	1-130-491-00	CAP,MYLAR 0.047 5% 50V
C7	1-130-495-00	CAP,MYLAR 0.1 5% 50V
C11	1-136-169-00	CAP,MYLAR 0.22 5% 50V
C2,6,8,9,10,14,15,16,18, 19,21,22,23,24,26,27, 28,30,31,32	1-161-055-00	CAP,CERAMIC 0.022 10% 50V
R29	1-215-375-31	RES,METAL 12 1% 1/6W
R80	1-215-422-00	RES,METAL 1.1K 1% 1/6W
R24	1-215-436-00	RES,METAL 4.3K 1% 1/6W
R54,55,56,57	1-215-445-00	RES,METAL 10K 1% 1/6W
R82	1-215-455-00	RES,METAL 27K 1% 1/6W
R10	1-215-456-00	RES,METAL 30K 1% 1/6W
R7	1-215-458-00	RES,METAL 36K 1% 1/6W
R8	1-215-459-00	RES,METAL 39K 1% 1/6W
R50	1-217-152-11	⚠ RES,METAL 0.33 10% 2W
RB1	1-231-533-00	RES BLOCK,10Kx4
R102	1-247-100-00	RES,CARBON 51 5% 1/4W
R13,15,19	1-247-123-00	RES,CARBON 470 5% 1/4W
R2	1-247-139-00	⚠ RES,CARBON 2.2K 5% 1/4W
R3,4,14,18,21	1-247-142-00	⚠ RES,CARBON 3K 5% 1/4W
R28	1-247-773-00	RES,CARBON 3.9 5% 1/6W
R73,77	1-247-811-00	RES,CARBON 150 5% 1/6W
R69,70,95,96,98,99	1-247-816-00	RES,CARBON 240 5% 1/6W
R12,17,22	1-247-823-00	RES,CARBON 470 5% 1/6W

Ref.No. or Q'ty	Part No.	Description
(DA-07 BOARD,TTP)		
R44,46,49	1-247-824-00	RES,CARBON 510 5% 1/6W
R39	1-247-825-00	RES,CARBON 560 5% 1/6W
R63,64,65	1-247-827-00	RES,CARBON 680 5% 1/6W
R33,34,43,45,47	1-247-829-00	RES,CARBON 820 5% 1/6W
R6,11,16,20,79	1-247-831-00	RES,CARBON 1K 5% 1/6W
R88	1-247-837-00	RES,CARBON 1.8K 5% 1/6W
R1,9	1-247-838-00	RES,CARBON 2K 5% 1/6W
R48,51,87	1-247-839-00	RES,CARBON 2.2K 5% 1/6W
R41	1-247-841-00	RES,CARBON 2.7K 5% 1/6W
R66,89	1-247-843-00	RES,CARBON 3.3K 5% 1/6W
R25,53	1-247-846-00	RES,CARBON 4.3K 5% 1/6W
R35,83	1-247-848-00	RES,CARBON 5.1K 5% 1/6W
R38	1-247-850-00	RES,CARBON 6.2K 5% 1/6W
R26,27,37,42,59,61,67, 68,74,81,84	1-247-855-00	RES,CARBON 10K 5% 1/6W
R85,86	1-247-857-00	RES,CARBON 12K 5% 1/6W
R32	1-247-859-00	RES,CARBON 15K 5% 1/6W
R72,75	1-247-861-00	RES,CARBON 18K 5% 1/6W
R52	1-247-862-00	RES,CARBON 20K 5% 1/6W
R100	1-247-864-00	RES,CARBON 24K 5% 1/6W
R101	1-247-865-00	RES,CARBON 27K 5% 1/6W
R40,62,92,93	1-247-869-00	RES,CARBON 39K 5% 1/6W
R23	1-247-872-00	RES,CARBON 51K 5% 1/6W
R31	1-247-874-00	RES,CARBON 62K 5% 1/6W
R90	1-247-879-00	RES,CARBON 100K 5% 1/6W
R58	1-247-881-00	RES,CARBON 120K 5% 1/6W
R78	1-247-886-00	RES,CARBON 200K 5% 1/6W
R30	1-247-887-00	RES,CARBON 220K 5% 1/6W

Ref.No. or Q'ty	Part No.	Description
(DA-07 BOARD,TTP)		
R71,76,97		
	1-247-895-00	RES,CARBON 470K 5% 1/6W
R91	1-247-896-00	RES,CARBON 510K 5% 1/6W
L1,2,3	1-407-885-00	INDUCTOR,MICRO,0.1mH 5%
L4	1-408-405-00	INDUCTOR,MICRO,4.7 5%
CN115M ()	1-535-173-00	TERMINAL,INSERT
CN117M ()	1-560-178-00	RECEP,6P,MALE
CN112M ()	1-560-302-00	RECEP,5P,MALE
CN116M ()	1-560-723-00	RECEP,3P,MALE
CN114M ()	1-560-724-00	RECEP,10P,MALE
CN111M ()	1-560-726-00	RECEP,20P,MALE
TP4,5,6,7		
()	3-673-805-01	TERMINAL,TP
TPE2,3 ()	3-673-805-11	TERMINAL,TP
4pcs	7-686-449-01	SCREW,PS 3x10
2pcs	7-686-528-01	SCREW,PSW 3x8
D17	8-719-182-07	DIODE RD8.2E
D1	8-719-200-02	DIODE 10E2
D8,9,10,12,13,14,15,16, 18,20	8-719-815-55	DIODE 1S1555
D2,3,4,5,6,7		
	8-719-911-55	DIODE U05G
D19	8-719-981-01	DIODE ERA81-004
Q16,18,20		
	8-729-195-23	TRANSISTOR 2SA952
Q6,8,10,11,12		
	8-729-201-32	TRANSISTOR 2SA1013
Q5,7,9,17,19,21		
	8-729-238-32	TRANSISTOR 2SC2383
Q1	8-729-318-63	TRANSISTOR 2SA1186
Q2,3,4,13,14,15		
	8-729-383-73	TRANSISTOR 2SC2837
Q22	8-729-663-47	TRANSISTOR 2SC1364

Ref.No. or Q'ty	Part No.	Description
(DA-07 BOARD,TTP)		
IC8,9,10	8-759-103-93	IC UPC393C
IC7	8-759-135-80	IC UPC358C
IC1,2,3,4		
	8-759-145-58	IC UPC4558C
IC6	8-759-220-74	IC TC40H074P,CMOS
IC5	8-759-755-17	IC,PROM,MB7051-A1U1

CA-09 BOARD (BVH-2000PS,2180PS/TTP)

1pc ()	A-6015-064-A	COMPLETE PCB,CA-09
(This assembly includes the following parts.)		
Q2,3,10,11,18 & 19		
	X-3673-686-0	TRANSISTOR KIT,2SC1890A
	This part is the kit of six transistors. Replace Q2,3,10,11,18 & 19 at the same time.	
C47,50,53		
	1-102-074-00	CAP,CERAMIC 0.001 10% 50V
C14	1-102-106-00	CAP,CERAMIC 100PF 10% 50V
C17,38	1-102-109-00	CAP,CERAMIC 180PF 10% 50V
C48,51,54		
	1-102-110-00	CAP,CERAMIC 220PF 10% 50V
C5,42	1-108-595-00	CAP,MYLAR 0.047 5% 50V
C18,40,45		
	1-108-603-00	CAP,MYLAR 0.1 5% 50V

Ref.No. or Q'ty	Part No.	Description
(CA-09 BOARD,TTP)		
C39	1-108-611-00	CAP,MYLAR 0.22 5% 50V
C8,10,30,55	1-123-307-00	CAP,ELECT 100 10V
C22,28	1-123-333-00	CAP,ELECT 100 25V
C1	1-123-356-00	CAP,ELECT 10 50V
C37	1-123-360-00	CAP,ELECT 100 50V
C3	1-123-379-00	CAP,ELECT 0.47 100V
C2,4,6,7,9,11,12,13,15, 16,19,20,21,23,24,25, 26,27,29,31,32,33,34, 35,36,41,43,44,46,49, 52,56	1-161-055-00	CAP,CERAMIC 0.022 10% 50V
R22,23,24	1-214-278-00	RES,METAL 5.6K 0.25% 1/8W
R140,141	1-215-390-00	RES,METAL 51 1% 1/6W
R10	1-215-422-00	RES,METAL 1.1K 1% 1/6W
R17	1-215-432-00	RES,METAL 3K 1% 1/6W
R42,64	1-215-436-00	RES,METAL 4.3K 1% 1/6W
R39,62	1-215-440-00	RES,METAL 6.2K 1% 1/6W
R34,35,36,73,75,76,77	1-215-445-00	RES,METAL 10K 1% 1/6W
R33	1-215-452-00	RES,METAL 20K 1% 1/6W
R18,31	1-215-454-00	RES,METAL 24K 1% 1/6W
R9	1-215-455-00	RES,METAL 27K 1% 1/6W
R27	1-215-462-00	RES,METAL 51K 1% 1/6W
R70,71,72	1-215-243-00	RES,METAL 22K 0.1% 1/6W
R74	1-217-153-00	⚠ RES,METAL 0.47 10% 2W
R41,63	1-247-776-00	RES,CARBON 5.1 5% 1/6W
R91,109,127	1-247-783-00	RES,CARBON 10 5% 1/6W

Ref.No. or Q'ty	Part No.	Description
(CA-09 BOARD,TTP)		
R97,98,115,116,133,134	1-247-779-00	RES,CARBON 6.8 5% 1/6W
R90,108,126	1-247-804-00	RES,CARBON 75 5% 1/6W
R43,45	1-247-811-00	RES,CARBON 150 5% 1/6W
R93,111,129	1-247-814-00	RES,CARBON 200 5% 1/6W
R96,114,132	1-247-815-00	RES,CARBON 220 5% 1/6W
R50,51,55,56,59,79	1-247-816-00	RES,CARBON 240 5% 1/6W
R38,61	1-247-824-00	RES,CARBON 510 5% 1/6W
R15	1-247-825-00	RES,CARBON 560 5% 1/6W
R89,107,125	1-247-828-00	RES,CARBON 750 5% 1/6W
R67,69	1-247-829-00	RES,CARBON 820 5% 1/6W
R8,48,49,84,85,88,102, 103,106,120,121,124,	1-247-831-00	RES,CARBON 1K 5% 1/6W
R16	1-247-833-00	RES,CARBON 1.2K 5% 1/6W
R92,110,128	1-247-838-00	RES,CARBON 2K 5% 1/6W
R13,138	1-247-839-00	RES,CARBON 2.2K 5% 1/6W
R6	1-247-840-00	RES,CARBON 2.4K 5% 1/6W
R94,112,130	1-247-842-00	RES,CARBON 3K 5% 1/6W
R4,20,29	1-247-848-00	RES,CARBON 5.1K 5% 1/6W
R26	1-247-850-00	RES,CARBON 6.2K 5% 1/6W
R137	1-247-851-00	RES,CARBON 6.8K 5% 1/6W
R2,3,11,21,32,44,53,58, 65,78,80,81,82,86,99, 100,104,117,118,122, 135,139	1-247-855-00	RES,CARBON 10K 5% 1/6W

Ref.No. or Q'ty	Part No.	Description
(CA-09 BOARD,TTP)		
R5	1-247-856-00	RES,CARBON 11K 5% 1/6W
R1,7	1-247-857-00	RES,CARBON 12K 5% 1/6W
R136	1-247-859-00	RES,CARBON 15K 5% 1/6W
R46	1-247-861-00	RES,CARBON 18K 5% 1/6W
R28	1-247-862-00	RES,CARBON 20K 5% 1/6W
R25,83,87,101,105,119, 123	1-247-863-00	RES,CARBON 22K 5% 1/6W
R14	1-247-864-00	RES,CARBON 24K 5% 1/6W
R66	1-247-865-00	RES,CARBON 27K 5% 1/6W
R19	1-247-866-00	RES,CARBON 30K 5% 1/6W
R68,95,113,131	1-247-869-00	RES,CARBON 39K 5% 1/6W
R47	1-247-879-00	RES,CARBON 100K 5% 1/6W
R12	1-247-886-00	RES,CARBON 200K 5% 1/6W
R30	1-247-889-00	RES,CARBON 270K 5% 1/6W
R52,57,60	1-247-895-00	RES,CARBON 470K 5% 1/6W
R37,40,54	1-247-903-00	RES,CARBON 1M 5% 1/6W
L1,2,3	1-407-885-00	INDUCTOR,MICRO,0.1mH 5%
CN105M ()	1-535-173-00	TERMINAL,INSERT
CN103M ()	1-560-178-00	RECEP,6P,MALE
CN104M ()	1-560-723-00	RECEP,3P,MALE
CN102M ()	1-560-724-00	RECEP,10P,MALE
CN101M ()	1-560-726-00	RECEP,20P,MALE
TP1,2,3,4,5,6,7 ()	3-673-805-01	TERMINAL,TP
TPE1,2 ()	3-673-805-11	TERMINAL,TP
6pcs	7-686-449-01	SCREW,PS 3x10
2pcs	7-686-528-01	SCREW,PSW 3x8
D4	8-719-182-07	DIODE RD8.2E
D21,22,23,24,25,26	8-719-200-02	DIODE 10E2

Ref.No. or Q'ty	Part No.	Description
(CA-09 BOARD,TTP)		
D2,3,5,6,7,8,9,10,11,12, 13,14,15,16,17,18,19, 20	8-719-815-55	DIODE 1S1555
D1	8-719-981-01	DIODE ERA81-004
Q7,15,23	8-729-106-92	TRANSISTOR 2SC2690A
Q5,13,21	8-729-177-43	TRANSISTOR 2SD774
Q6,14,22	8-729-122-02	TRANSISTOR 2SA1220A
Q9,17,25	8-729-318-63	TRANSISTOR 2SA1186
Q1	8-729-374-02	TRANSISTOR 2SB740
Q8,16,24	8-729-383-73	TRANSISTOR 2SC2837
Q4,12,20	8-729-663-47	TRANSISTOR 2SC1364
IC1,11,12	8-759-103-93	IC UPC393C
IC10	8-759-135-80	IC UPC358C
IC2,3,4,6,15,16	8-759-145-58	IC UPC4558C
IC14	8-759-220-74	IC TC40H074P,CMOS
IC13	8-759-240-49	IC TC4049BP,CMOS
IC5,9	8-759-240-52	IC TC4052BP,CMOS
IC8	8-759-240-81	IC TC4081BP,CMOS
IC7	8-759-745-60	IC NJM4560D

Ref.No. or Q'ty	Part No.	Description
RA-05 BOARD (BVH-2000PS,2180PS/TTP)		
1pc (for BVH-2000PS)		
	() A-6023-031-B	COMPLETE PCB,RA-05
1pc (for BVH-2180PS)		
	() A-6023-034-A	COMPLETE PCB,RA-05
(These ass'ies includes the following parts.)		
C50,52	1-102-074-00	CAP,CERAMIC 0.001 10% 50V
C30,75,86,87,88,89,90, 91	1-102-106-00	CAP,CERAMIC 100PF 10% 50V
C4,5,6,8,51,55,56,57	1-108-555-00	CAP,MYLAR 0.001 5% 50V
C16,64	1-108-571-00	CAP,MYLAR 0.0047 5% 50V
C22,58	1-108-583-00	CAP,MYLAR 0.015 5% 50V
C18,60	1-108-595-00	CAP,MYLAR 0.047 5% 50V
C20,61	1-108-603-00	CAP,MYLAR 0.1 5% 50V
C40	1-123-307-00	CAP,ELECT 100 10V
C92,93	1-123-308-00	CAP,ELECT 220 10V
C35,84	1-123-332-00	CAP,ELECT 47 25V
C7,42,46,54	1-123-333-00	CAP,ELECT 100 50V
C12,34,68,77,78	1-123-356-00	CAP,ELECT 10 50V
C13,69	1-123-369-00	CAP,ELECT 4.7 63V
C11,67	1-123-380-00	CAP,ELECT 1 100V
C1,2	1-123-388-00	CAP,ELECT 100 100V
C94	1-131-373-00	CAP,TANT 22 10% 16V
C3,9,14,15,17,19,21,23, 25,27,28,29,31,33,36, 37,38,39,41,43,44,45, 47,48,49,62,63,65,66, 70,71,72,73,76,80,81, 82,83	1-161-055-00	CAP,CERAMIC 0.022 10% 50V

Ref.No. or Q'ty	Part No.	Description
(RA-05 BOARD,TTP)		
R34,35,69,70,190,191, 224,225	1-215-377-00	RES,METAL 15 1% 1/6W
R53,54,56,231,232,233	1-215-385-00	RES,METAL 33 1% 1/6W
R139,145,299,304	1-215-405-00	RES,METAL 220 1% 1/6W
R143,149,298,308	1-215-414-00	RES,METAL 510 1% 1/6W
R290	1-215-422-00	RES,METAL 1.1K 1% 1/6W
R36,37,39,40,41,42,196, 197,198,199,201,202	1-215-428-00	RES,METAL 2K 1% 1/6W
R52,236	1-215-433-00	RES,METAL 3.3K 1% 1/6W
R126,254	1-215-435-00	RES,METAL 3.9K 1% 1/6W
R18,19,20,183,184,185	1-215-437-00	RES,METAL 4.7K 1% 1/6W
R140,141,144,146,300, 301,303,305	1-215-440-00	RES,METAL 6.2K 1% 1/6W
R13,14,15,180,181,182	1-215-443-00	RES,METAL 8.2K 1% 1/6W
R58,74,105,109,114,120, 125,152,155,230,245, 258,260,263,266,267, 296,297	1-215-445-00	RES,METAL 10K 1% 1/6W
R77,115,228,256	1-215-447-00	RES,METAL 12K 1% 1/6W
R76,229	1-215-449-00	RES,METAL 15K 1% 1/6W
R117,259	1-215-451-00	RES,METAL 18K 1% 1/6W
R16,17,22,163,164,166	1-215-453-00	RES,METAL 22K 1% 1/6W
R293	1-215-455-00	RES,METAL 27K 1% 1/6W
R116,255	1-215-459-00	RES,METAL 39K 1% 1/6W

Ref.No. or Q'ty	Part No.	Description
(RA-05 BOARD,TTP) (for BVH-2000PS)		
R79,215	1-215-464-00	RES,METAL 62K 1% 1/6W
R21,113,142,147,165,302, 306,311	1-215-469-00	RES,METAL 100K 1% 1/6W
R23,167	1-217-152-11 ⚠	RES,METAL 0.33 10% 2W
RV1,6	1-230-842-11	RES,VAR,METAL 5K
RV2,5	1-230-845-11	RES,VAR,METAL 50K
R24,25,26,168,178,179	1-247-121-00	RES,CARBON 390 5% 1/4W
R320,334	1-247-131-00	RES,CARBON 1K 5% 1/4W
R1,2,3,10,11,12,157,158, 159,172,173,174	1-247-139-00 ⚠	RES,CARBON 2.2K 5% 1/4W
R55	1-247-425-11	RES,CARBON 47K 5% 1/6W
R4,5,6,160,161,162	1-247-771-00	RES,CARBON 3.3 5% 1/6W
R148,150,307,309	1-247-800-00	RES,CARBON 51 5% 1/6W
R135,138	1-247-805-00	RES,CARBON 82 5% 1/6W
R66,93,95,96,98,100,275, 276,277,280,281,282	1-247-816-00	RES,CARBON 240 5% 1/6W
R27,28,29,30,31,32,175, 176,177,188,189,192	1-247-819-00	RES,CARBON 330 5% 1/6W
R61,242	1-247-824-00	RES,CARBON 510 5% 1/6W
R71,133,223,252,283,289	1-247-831-00	RES,CARBON 1K 5% 1/6W
R50,186	1-247-834-00	RES,CARBON 1.3K 5% 1/6W
R119,262	1-247-837-00	RES,CARBON 1.8K 5% 1/6W
R51,112,235,270	1-247-838-00	RES,CARBON 2K 5% 1/6W

Ref.No. or Q'ty	Part No.	Description
(RA-05 BOARD,TTP)		
R7,8,9,68,121,169,170, 171,226,234,264,325, 330	1-247-839-00	RES,CARBON 2.2K 5% 1/6W
R33,187	1-247-843-00	RES,CARBON 3.3K 5% 1/6W
R123,285	1-247-844-00	RES,CARBON 3.6K 5% 1/6W
R72,219,327	1-247-845-00	RES,CARBON 3.9K 5% 1/6W
R55	1-247-847-00	RES,CARBON 4.7K 5% 1/6W
R90,108,154,214,294,313, 314	1-247-848-00	RES,CARBON 5.1K 5% 1/6W
R118,261	1-247-849-00	RES,CARBON 5.6K 5% 1/6W
R80,128,216,247	1-247-850-00	RES,CARBON 6.2K 5% 1/6W
R64,246	1-247-851-00	RES,CARBON 6.8K 5% 1/6W
R130,248,329,337,338	1-247-853-00	RES,CARBON 8.2K 5% 1/6W
R38,43,44,46,47,48,49, 92,101,102,103,104,106, 110,122,136,151,153, 156,194,200,203,204, 221,222,253,265,268, 272,273,291,292,295, 316,317	1-247-855-00	RES,CARBON 10K 5% 1/6W
R75,89,211,220,284,287	1-247-857-00	RES,CARBON 12K 5% 1/6W
R86,206	1-247-858-00	RES,CARBON 13K 5% 1/6W
R57,238,321,335	1-247-859-00	RES,CARBON 15K 5% 1/6W
R134,137	1-247-861-00	RES,CARBON 18K 5% 1/6W
R315,318	1-247-862-00	RES,CARBON 20K 5% 1/6W
R82,85,124,207,217,257	1-247-863-00	RES,CARBON 22K 5% 1/6W
R78,213	1-247-864-00	RES,CARBON 24K 5% 1/6W
R127,212	1-247-870-00	RES,CARBON 43K 5% 1/6W

Ref.No. or Q'ty	Part No.	Description
(RA-05 BOARD,TTP)		
R45,83,111,195,269,319, 324,326,331,339	1-247-872-00	RES,CARBON 51K 5% 1/6W
R65,243	1-247-874-00	RES,CARBON 62K 5% 1/6W
R107,271	1-247-875-00	RES,CARBON 68K 5% 1/6W
R60,239	1-247-876-00	RES,CARBON 75K 5% 1/6W
R131,250	1-247-878-00	RES,CARBON 91K 5% 1/6W
R63,193,240,310,322,323, 332,333	1-247-879-00	RES,CARBON 100K 5% 1/6W
R59,237	1-247-882-00	RES,CARBON 130K 5% 1/6W
R62,241	1-247-883-00	RES,CARBON 150K 5% 1/6W
R210,312	1-247-885-00	RES,CARBON 180K 5% 1/6W
R67,87,88,91,205,208, 209,244,286,288	1-247-886-00	RES,CARBON 200K 5% 1/6W
R73,227	1-247-893-00	RES,CARBON 390K 5% 1/6W
R94,97,99,132,251,274, 278,279,328,336	1-247-895-00	RES,CARBON 470K 5% 1/6W
(for BVH-2180PS)		
R79,215	1-247-859-00	RES,CARBON 470K 5% 1/6W
R129,249	1-247-902-00	RES,CARBON 910K 5% 1/6W
R81,218	1-247-903-00	RES,CARBON 1M 5% 1/6W
L2,3	1-407-885-00	INDUCTOR,MICRO,0.1mH 5%
L1	1-409-339-00	COIL,SN
CN201M	() 1-535-173-00	TERMINAL,INSERT
CN207M,208M,209M	() 1-560-178-00	RECEP,6P,MALE
CN202M,204M	() 1-560-303-00	RECEP,6P,MALE
CN205M,206M	() 1-560-724-00	RECEP,10P,MALE
CN203M	() 1-560-729-00	RECEP,34P,MALE
S1	1-570-258-12	SWITCH,THERMAL REED 90°C

Ref.No. or Q'ty	Part No.	Description
(RA-05 BOARD,TTP)		
1pc	() 1-609-900-11	PC BOARD,SW-14 WITHOUT COMPONENT
3pcs	3-534-816-00	SUPPORT
TP1,2,3,4,5,7,8,9,10,13, 14,15,16,17,19,20,21, 22,25,26	() 3-673-772-21	TERMINAL,TP
TP23,24	() 3-673-805-01	TERMINAL,TP
TPE1,2	() 3-673-805-11	TERMINAL,TP
2pcs	4-866-397-00	CUSHION,LED
4pcs	7-621-981-25	SCREW,PSW 2.6x8
6pcs	7-623-208-22	SPRING WASHER,M2
6pcs	7-682-657-01	SCREW,+PS 3x40
6pcs	7-684-023-04	NUT,M3
4pcs	7-686-447-01	SCREW,PS 3x6
1pc	7-686-448-01	SCREW,PS 3x8
4pcs	7-686-527-01	SCREW,PSW 3x6
D25,26,54,55	8-719-151-07	DIODE RD5.1E-B
D13,14,15,41,42,43	8-719-175-07	DIODE RD7.5E
D7,8,9,38,39,40	8-719-200-02	DIODE 10E2
D10,11,12,16,17,18,21, 22,23,24,27,34,35,36, 37,44,45,46,49,50,51, 52,53,56,58,59,60,61, 62,63	8-719-815-55	DIODE 1S1555
D20,47	8-719-911-06	DIODE 1SS106
D1,2,3,4,5,6,28,29,30, 31,32,33	8-719-911-55	DIODE U05G
D57	8-719-981-01	DIODE ERA81-004
Q47,54	8-729-115-64	TRANSISTOR 2SA1156
Q22,45	8-729-117-54	TRANSISTOR 2SA1175
Q19,44	8-729-177-43	TRANSISTOR 2SD774

Ref.No. or Q'ty	Part No.	Description
(RA-05 BOARD,TTP)		
Q13,14,15,36,37,38	8-729-195-23	TRANSISTOR 2SA952
Q4,5,6,27,28,29	8-729-201-32	TRANSISTOR 2SA1013
Q7,8,9,30,31,32	8-729-238-32	TRANSISTOR 2SC2383
Q48,53	8-729-255-12	TRANSISTOR 2SC2551
Q10,11,12,33,34,35	8-729-377-32	TRANSISTOR 2SC2773-O
Q1,2,3,24,25,26	8-729-383-73	TRANSISTOR 2SC2837
Q16,17,18,20,21,23,39, 40,41,42,43,46,49,50, 51,52,55,56	8-729-606-32	TRANSISTOR 2SC2603
IC5	8-759-045-38	IC MC14538BCP,CMOS
IC9,10,13,23,26,27,28	8-759-103-93	IC UPC393C
IC14	8-759-135-80	IC UPC358C
IC6,7,11,12,15,16,21,22, 24,25,29,30	8-759-145-58	IC UPC4558C
IC4	8-759-240-13	IC TC4013BP,CMOS
IC2,18,19	8-759-240-30	IC TC4030BP,CMOS
IC1,17	8-759-755-17	IC,PROM,MB7051-A1U1
IC3	8-759-900-32	IC SN74LS32N,TTL
IC8,20	8-759-990-82	IC TL082CP

Ref.No. or Q'ty	Part No.	Description
TT-01 BOARD (BVH-2000PS,2180PS/TTP)		
1pc (for BVH-2000PS)	() A-6025-084-A	COMPLETE PCB,TT-01
1pc (for BVH-2180PS)	() A-6025-091-A	COMPLETE PCB,TT-01
(These ass'ies includes the following parts.)		
C20	1-102-106-00	CAP,CERAMIC 100PF 10% 50V
C18	1-108-587-00	CAP,MYLAR 0.022 5% 50V
C17	1-108-595-00	CAP,MYLAR 0.047 5% 50V
C4	1-123-307-00	CAP,ELECT 100 10V
C21,22	1-123-330-00	CAP,ELECT 22 25V
C16	1-123-332-00	CAP,ELECT 47 25V
C5,8,11,12	1-123-333-00	CAP,ELECT 100 25V
C9	1-123-356-00	CAP,ELECT 10 50V
C1,2,3,6,7,10,13,14,15, 19,23	1-161-055-00	CAP,CERAMIC 0.022 10% 50V
R15	1-212-370-00 ⚠	RES,METAL 6.8 5% 1W
R40,41	1-214-116-00	RES,METAL 220 1% 1/4W
R26,37	1-214-125-00	RES,METAL 510 1% 1/4W
R12,13,35	1-214-132-00	RES,METAL 1K 1% 1/4W
R31	1-214-141-00	RES,METAL 2.4K 1% 1/4W
R27,28,38,39	1-214-151-00	RES,METAL 6.2K 1% 1/4W
(for BVH-2180PS)		
R34,36	1-214-159-00	RES,METAL 13K 1% 1/4W
(for BVH-2000PS)		
R34,36	1-214-170-00	RES,METAL 39K 1% 1/4W

Ref.No. or Q'ty	Part No.	Description
(TT-01 BOARD,TTP)		
R30,32	1-214-170-00	RES,METAL 39K 1% 1/4W
R23,25	1-214-180-00	RES,METAL 100K 1% 1/4W
R29,33	1-214-350-00	RES,METAL 5.6K 0.1% 1/8W
RV2	1-228-305-00	RES,VAR,CERMET 1K
RV1	1-228-307-00	RES,VAR,CERMET 5K
RB1	1-231-410-00	RES BLOCK,10Kx8
R18,19,20,21,22,24	1-247-800-00	RES,CARBON 51 5% 1/6W
R7	1-247-817-00	RES,CARBON 270 5% 1/6W
R46	1-247-818-00	RES,CARBON 300 5% 1/6W
R59	1-247-825-00	RES,CARBON 560 5% 1/6W
R53	1-247-827-00	RES,CARBON 680 5% 1/6W
R55	1-247-828-00	RES,CARBON 750 5% 1/6W
R11,49,56	1-247-831-00	RES,CARBON 1K 5% 1/6W
R60,61	1-247-833-00	RES,CARBON 1.2K 5% 1/6W
R16,17	1-247-834-00	RES,CARBON 1.3K 5% 1/6W
R2,6,10	1-247-839-00	RES,CARBON 2.2K 5% 1/6W
R5,54	1-247-842-00	RES,CARBON 3K 5% 1/6W
R14	1-247-847-00	RES,CARBON 4.7K 5% 1/6W
R4,9	1-247-853-00	RES,CARBON 8.2K 5% 1/6W
R1,3,8,48,50,57,58	1-247-855-00	RES,CARBON 10K 5% 1/6W
R44,47	1-247-859-00	RES,CARBON 15K 5% 1/6W
R51,52	1-247-863-00	RES,CARBON 22K 5% 1/6W
R42	1-247-883-00	RES,CARBON 150K 5% 1/6W
R45	1-247-896-00	RES,CARBON 510K 5% 1/6W
R43	1-247-901-00	RES,CARBON 820K 5% 1/6W
L2	1-408-421-00	INDUCTOR,MICRO,100 5%
L1,3	1-409-339-00	COIL,SN
CN007M	() 1-560-299-00	RECEP,2P,MALE
CN001M,008M,009M	() 1-560-300-00	RECEP,3P,MALE
CN005M,006M	() 1-560-301-00	RECEP,4P,MALE
CN003M,004M	() 1-560-302-00	RECEP,5P,MALE

Ref.No. or Q'ty	Part No.	Description
(TT-01 BOARD,TTP)		
CN002M	() 1-560-305-00	RECEP,10P,MALE
CN010M	() 1-560-729-00	RECEP,34P,MALE
TP1	() 3-673-805-01	TERMINAL,TP
TPE2	() 3-673-805-11	TERMINAL,TP
4pcs	4-866-397-00	CUSHION,LED
D4,5	8-719-100-28	DIODE RD4.7E-B3
D6,7	8-719-151-07	DIODE RD5.1E-B
D2,3,9,10,11,12,13,14, 15,16	8-719-200-02	DIODE 10E2
D1,8	8-719-815-55	DIODE 1S1555
Q1	8-729-117-54	TRANSISTOR 2SA1175
Q10,17,18	8-729-177-43	TRANSISTOR 2SD774
Q6	8-729-373-92	TRANSISTOR 2SB739
Q5	8-729-378-84	TRANSISTOR 2SD788
Q15,16	8-729-398-63	TRANSISTOR 2SC1986-Y
Q2,3,4,7,8,9,11,12,13, 14	8-729-606-32	TRANSISTOR 2SC2603
IC6	8-759-045-84	IC MC14584BCP,CMOS
IC1,4	8-759-145-58	IC UPC4558C
IC5	8-759-240-30	IC TC4030BP,CMOS
IC2,3	8-759-700-10	IC NJM4558DMD
IC7	8-759-900-05	IC SN74LS05N,TTL

Ref. No. or Q'ty		Part No.	Description
RS-17 BOARD (BVH-2180PS/TTP)			
1pc	()	A-6025-093-A	COMPLETE PCB, RS-17
(This assembly includes the following parts.)			
C6		1-108-579-00	CAP, MYLAR 0.01 5% 50V
C1		1-124-142-00	CAP, ELECT 470 10V
C2, 3, 4, 5, 7, 8, 9, 10, 11		1-161-055-00	CAP, CERAMIC 0.022 10% 50V
R10, 11		1-247-800-00	RES, CARBON 51 5% 1/6W
R8, 12		1-247-819-00	RES, CARBON 330 5% 1/6W
R6, 7		1-247-821-00	RES, CARBON 390 5% 1/6W
R1, 9		1-247-831-00	RES, CARBON 1.0K 5% 1/6W
R2, 3, 4		1-247-855-00	RES, CARBON 10K 5% 1/6W
R5		1-247-887-00	RES, CARBON 220K 5% 1/6W
L1		1-409-339-00	COIL, SN
CN042M	()	1-560-302-00	RECEP, 5P, MALE
CN041M	()	1-560-306-00	RECEP, 12P, MALE
D1, 2		8-719-930-33	LED, GL-3PR3, RED
IC4		8-759-001-00	IC MC74HC132N, CMOS
IC2, 3		8-759-202-83	IC TC74HC107P, CMOS
IC5		8-759-207-73	IC TC4030BPHB
IC6		8-759-240-22	IC TC4022BP, CMOS
IC1, 7		8-759-954-54	IC SN75454BP, TTL

Ref. No. or Q'ty		Part No.	Description
TM-16 BOARD (BVH-2000PS, 2180PS/TTP)			
1pc	()	1-609-959-12	PC BOARD, TM-16, WITHOUT COMPONENT
C1		1-161-055-00	CAP, CERAMIC 0.022 10% 50V
R1		1-215-423-00	RES, METAL 1.2K 1% 1/6W
R4		1-215-427-00	RES, METAL 1.8K 1% 1/6W
R3		1-215-464-00	RES, METAL 62K 1% 1/6W
R2		1-215-467-00	RES, METAL 82K 1% 1/6W
R5		1-215-487-00	RES, METAL 560K 1% 1/6W
4pcs		1-517-072-00	HOLDER, LAMP
TM2, 3		1-548-119-00	HOURS METER
S1		1-553-441-21	SWITCH, TOGGLE
CN022M	()	1-560-310-00	RECEP, 4P, MALE
TP1, 2	()	3-673-805-01	TERMINAL, TP
TPE	()	3-673-805-11	TERMINAL, TP
2pcs		7-621-981-15	SCREW, PSW 2.6x6

RS-18 BOARD (BVH-2180PS/TTP)			
1pc	()	1-613-389-11	PC BOARD, RS-18 WITHOUT COMPONENT
CN041F	()	1-561-056-00	PLUG, HOUSING, 12P
	()	1-560-298-00	CONTACT, FEMALE
1pc	()	3-701-822-00	HOLDER, WIRE
4pcs		7-686-447-01	SCREW, PS3x6
1pc		7-686-527-01	SCREW, PSW3x6
D1, 2		8-719-919-39	DIODE GP-2L01F

Ref.No. or Q'ty		Part No.	Description
HM-05 BOARD (BVH-2000PS,2180PS/TTP)			
1pc	()	1-606-699-00	PC BOARD,HM-05, WITHOUT COMPONENT
R2		1-214-165-00	RES,METAL 24K 1% 1/4W
R1		1-214-170-00	RES,METAL 39K 1% 1/4W
R3		1-214-788-00	RES,METAL 300K 1% 1/4W
2pcs		1-517-072-00	HOLDER,LAMP
TM1		1-548-119-00	HOURS METER
CN021M	()	1-560-310-00	RECEP,4P,MALE
TP1	()	3-673-805-01	TERMINAL,TP
TPE	()	3-673-805-11	TERMINAL,TP
2pcs		7-621-981-15	SCREW,PSW 2.6x6

Ref.No. or Q'ty		Part No.	Description
MOTOR BOARD (BVH-2000PS,2180PS/TTP)			
1pc	()	1-602-615-11	PC BOARD,MOTOR, WITHOUT COMPONENT
C301,302		1-108-577-00	CAP,MYLAR 0.0082 5% 50V
R305,306,312,313		1-214-108-00	RES,METAL 100 1% 1/4W
R301		1-214-116-00	RES,METAL 220 1% 1/4W
R316		1-214-124-00	RES,METAL 470 1% 1/4W
R302,303,304,309,310, 311		1-214-132-00	RES,METAL 1K 1% 1/4W
R307,314		1-214-174-00	RES,METAL 56K 1% 1/4W
R308,315		1-214-180-00	RES,METAL 100K 1% 1/4W
RT301		1-224-490-00	RES,VAR,METAL 4.7K
RT302		1-224-660-00	RES,VAR,METAL 1K
TP-01,02,G	()	1-536-354-00	TERMINAL,TP

Ref.No. or Q'ty		Part No.	Description
(MOTOR BOARD,TTP)			
CN024M	()	1-560-301-00	RECEP,4P,MALE
H301,302		8-719-800-17	DIODE THS102A
D301		8-719-110-03	DIODE RD7.5ESB2
Q301,303		8-729-141-42	TRANSISTOR 2SD414-R
Q302,304		8-729-154-82	TRANSISTOR 2SB548-R
IC301		8-759-700-58	IC NJM4558DFA

TD-05 BOARD (BVH-2000PS,2180PS/TTP)			
1pc	()	1-606-702-00	PC BOARD,TD-05, WITHOUT COMPONENT
CN006F	()	1-509-985-00	PLUG,HOUSING,4P
	()	1-560-298-00	CONTACT,FEMALE
1pc		7-621-972-25	SCREW,PS 2.6x6
1pc		7-621-972-35	SCREW,PS 2.6x8
PH1		8-719-411-02	PHOTOINTERRUPTER, ON1102S.SO

TH-03 BOARD (BVH-2000PS,2180PS/TTP)			
1pc	()	1-606-701-00	PC BOARD,TH-03, WITHOUT COMPONENT
S1,2		1-553-117-41	SWITCH,REED
CN023M	()	1-560-311-00	RECEP,5P,MALE

Ref.No. or Q'ty	Part No.	Description
TR-07 BOARD (BVH-2000PS,2180PS/TTP)		
1pc	() 1-606-698-00	PC BOARD,TR-07, WITHOUT COMPONENT
CN005F	() 1-509-985-00	PLUG,HOUSING,4P
	() 1-560-298-00	CONTACT,FEMALE
2pcs	7-687-603-14	SCREW,BTP 2.6x6
DME1	8-745-211-00	DME DM211
	() 3-673-694-00	HOLDER,DME
HD-06 BOARD (BVH-2000PS,2180PS/TTP)		
1pc	() 1-606-679-00	PC BOARD,HD-06, WITHOUT COMPONENT
CEH-2 BOARD (BVH-2000PS,2180PS/TTP)		
1pc	() 1-588-946-00	PC BOARD,CEH-2, WITHOUT COMPONENT

Ref.No. or Q'ty	Part No.	Description
HD-07 BOARD (BVH-2000PS-00,02,10,12/2180PS-00,02/TTP)		
2pcs (for 02/12 model)		
1pc (for 00/10 model)		
	() 1-606-680-00	PC BOARD,HD-07, WITHOUT COMPONENT
HD-08 BOARD (BVH-2000PS-04/14,2180PS-04/TTP)		
2pcs (for 04/14 model)		
	() 1-606-681-00	PC BOARD,HD-08 WITHOUT COMPONENT
VR-05 BOARD (BVH-2000PS-00,02,10,12/2180PS-00,02)		
1pc (for 00/02/10/12 model)		
	() A-6013-042-A	COMPLETE PCB,VR-05
(This assembly includes the following parts.)		
C1,3	1-123-333-00	CAP,ELECT 100 25V
C6,7,9,10,12,13	1-131-341-00	CAP,TANT 0.1 10% 35V
C11,14	1-131-359-00	CAP,TANT 10 10% 25V
C5,8	1-131-373-00	CAP,TANT 22 10% 16V
C2,4	1-161-055-00	CAP,CERAMIC 0.022 10% 50V

Ref.No. or Q'ty	Part No.	Description
(VR-05 BOARD,LEVEL CONT PNL)		
R1,2	1-206-473-00	⚠ RES,METAL 27 5% 2W
RV3,5,7,9,11,13	1-224-919-00	RES,VAR,METAL 5K
RV15	1-224-920-00	RES,VAR,METAL 10K
RV4,6,8,10,12,14	1-228-548-00	RES WITH SW,VAR,CARBON 10K(A)
RV16,17	1-228-549-00	RES WITH SW,VAR,CARBON 10K(B)
RV1	1-228-550-00	RES,VAR,CARBON 10K(A)x2
RV2	1-228-551-00	RES WITH SW,VAR,CARBON 2K(A)x2
R12,13,16,19,20,23,27, 28,30,31	1-247-807-00	RES,CARBON 100 5% 1/6W
R8,10	1-247-813-00	RES,CARBON 180 5% 1/6W
R7,9	1-247-828-00	RES,CARBON 750 5% 1/6W
R3,4,5,6	1-247-836-00	RES,CARBON 1.6K 5% 1/6W
R33,35,36,38,39,41	1-247-843-00	RES,CARBON 3.3K 5% 1/6W
R17,24,32	1-247-850-00	RES,CARBON 6.2K 5% 1/6W
R14,15,21,22	1-247-855-00	RES,CARBON 10K 5% 1/6W
R11,18,25	1-247-862-00	RES,CARBON 20K 5% 1/6W
R34,37,40	1-247-869-00	RES,CARBON 39K 5% 1/6W
R26,29	1-247-879-00	RES,CARBON 100K 5% 1/6W
J1	1-507-552-21	JACK,PHONE
CN802M,803M	() 1-560-301-00	RECEP,4P,MALE
CN805M,808M	() 1-560-302-00	RECEP,5P,MALE
CN800M,801M,812M	() 1-560-303-00	RECEP,6P,MALE
CN811M	() 1-560-304-00	RECEP,8P,MALE
CN804M,806M,810M	() 1-560-305-00	RECEP,10P,MALE
CN807M,809M	() 1-560-306-00	RECEP,12P,MALE
IC1,2,3	8-759-745-59	IC NJM4559D

VR-07 BOARD (BVH-2000PS-04/14,2180PS-04)

1pc (for 04/14 model)	() A-6013-056-A	COMPLETE PCB,VR-07
(This assembly includes the following parts.)		
C1,3	1-123-333-00	CAP,ELECT 100 25V
C5,6,8,9,12,13,16,17	1-131-341-00	CAP,TANT 0.1 10% 35V
C7,10,11,14,15,18	1-131-359-00	CAP,TANT 10 10% 25V
C2,4	1-161-055-00	CAP,CERAMIC 0.022 10% 50V
R1,2	1-206-473-00	RES,METAL 27 5% 2W
RV2,4,6,8,10,12,14,16	1-224-919-00	RES,VAR,METAL 5K

Ref.No. or Q'ty	Part No.	Description
(VR-07 BOARD,LEVEL CONT PNL)		
RV18	1-224-920-00	RES,VAR,METAL 10K
RV3,5,7,9,11,13,15,17	1-228-548-00	RES WITH SW,VAR,CARBON 10K(A)
RV19,20	1-228-549-00	RES WITH SW,VAR,CARBON 10K(B)
RV1	1-228-550-00	RES,VAR,CARBON 10K(A)×2
R6,7,9,11,16,17,19,21, 27,28,30,32,38,39,41, 43	1-247-807-00	RES,CARBON 100 5% 1/6W
R5,10,15,20,25,31,36,42	1-247-843-00	RES,CARBON 3.3K 5% 1/6W
R12,22,33,44	1-247-850-00	RES,CARBON 6.2K 5% 1/6W
R3,13,23,34	1-247-862-00	RES,CARBON 20K 5% 1/6W
R4,14,24,35	1-247-869-00	RES,CARBON 39K 5% 1/6W
R8,18,26,29,37,40	1-247-879-00	RES,CARBON 100K 5% 1/6W
J1	1-507-552-21	JACK,PHONE
CN802M,803M	() 1-560-301-00	RECEP,4P,MALE
CN805M,808M	() 1-560-302-00	RECEP,5P,MALE
CN800M,801M,812M	() 1-560-303-00	RECEP,6P,MALE
CN811M	() 1-560-304-00	RECEP,8P,MALE
CN804M,806M,810M	() 1-560-305-00	RECEP,10P,MALE
CN807M,809M	() 1-560-306-00	RECEP,12P,MALE
IC1,2,3,4	8-759-745-59	IC NJM4559D

ML-02 BOARD (BVH-2000PS-00,02,10,12/2180PS-00,02)

1pc (for 00/02/10/12 model)	() 1-606-711-00	PC BOARD,ML-02, WITHOUT COMPONENT
R1,2,3,4	1-247-121-00	RES,CARBON 390 5% 1/4W
R5	1-247-233-00	RES,CARBON 510 5% 1/2W
CN811F	() 1-509-988-00	PLUG,HOUSING,8P
	() 1-560-298-00	CONTACT,FEMALE
SW1	1-516-994-00	SWITCH,SLIDE
6pcs	4-866-397-00	CUSHION,LED
D33,34,35	8-719-952-51	LED,AA5525S,ORG
D1,2,3,4,5,6,7,8,9,10, 11,12,13,14,15,16,17, 18,19,20,21,22,23,24, 25,26,27,28,29,30,31, 32	8-719-955-25	LED,PY5525S,YEL

Ref.No. or Q'ty	Part No.	Description

ML-03 BOARD (BVH-2000PS-04/14,2180PS-04)

1pc (for 04/14 model)		
()	1-606-712-00	PC BOARD,ML-03 WITHOUT COMPONENT
R1,2,3,4,5		
	1-247-121-00	RES,CARBON 390 5% 1/4W
R6	1-247-233-00	RES,CARBON 510 5% 1/2W
CN811F ()	1-509-988-00	PLUG,HOUSING,8P
()	1-560-298-00	CONTACT,FEMALE
SW1	1-516-994-00	SWITCH,SLIDE
6pcs	4-866-397-00	CUSHION,LED
D41,42,43		
	8-719-952-51	LED,AA5525S,ORG
D1,2,3,4,5,6,7,8,9,10, 11,12,13,14,15,16,17, 18,19,20,21,22,23,24, 25,26,27,28,29,30,31, 32,33,34,35,36,37,38, 39,40	8-719-955-25	LED,PY5525S,YEL

MS-07 BOARD (BVH-2000PS-00,02,10,12/2180PS-00,02)

1pc (for 00/02/10/12 model)		
()	1-606-709-00	PC BOARD,MS-07 WITHOUT COMPONENT
R1,2,3,4,5,6,7,8,9,10, 11,12	1-247-811-00	RES,CARBON 150 5% 1/6W
SW1,2,3,4,5,6,7,8,9,10, 11,12	1-554-048-00	SWITCH,PUSH
CN821M ()	1-560-729-00	RECEP,34P,MALE

Ref.No. or Q'ty	Part No.	Description

MS-08 BOARD (BVH-2000PS-04/14,2180PS-04)

1pc (for 04/14 model)		
()	1-606-710-00	PC BOARD,MS-08 WITHOUT COMPONENT
R1,2,3,4,5		
	1-247-811-00	RES,CARBON 150 5% 1/6W
SW1,2,3,4,5		
	1-554-048-00	SWITCH,PUSH
CN821M ()	1-560-729-00	RECEP,34P,MALE

AC-39 BOARD (BVH-2000PS,2180PS/POWER SUPPLY)

1pc	() A-4925-001-A	⚠ COMPLETE PCB,AC-39
(This assembly includes the following parts.)		
C323	1-123-885-00	CAP,ELECT 47 10V
C315,316	1-123-890-00	CAP,ELECT 2.2 400V
C322,324,330,331		
	1-123-903-00	CAP,ELECT 47 16V
C321,325	1-124-115-00	CAP,ELECT 10 16V
C332	1-124-116-00	CAP,ELECT 22 16V
C320	1-124-164-00	CAP,ELECT 4.7 50V
C317	1-130-777-00	CAP,POLY 0.1 10% 100V
C318,319	1-130-781-00	CAP,POLY 0.22 10% 100V
C301,302,304		
	1-130-917-00	⚠ CAP,POLY 0.1 20% 250V

Ref. No. or Q'ty	Part No.	Description
(AC-39 BOARD, POWER SUPPLY)		
C305, 306, 307, 308, 309, 310, 311, 312, 313, 314, 326, 327, 328, 329	1-130-926-00 ⚠	CAP, POLY 0.0033 20% 250V
R301	1-202-726-00 ⚠	RES, COMP 3.9M 10% 1/2W
R316, 317	1-205-677-00 ⚠	RES, WIREWOUND 1K 5% 5W
R315, 341	1-205-678-00 ⚠	RES, WIREWOUND 16K 5% 5W
R302, 303, 360	1-205-679-00 ⚠	RES, WIREWOUND 3.3 5% 20W
R306	1-215-857-11 ⚠	RES, METAL 10 5% 1W
R333	1-215-903-11 ⚠	RES, METAL 68K 5% 2W
R304, 305	1-214-918-00	RES, METAL 160K 1% 1/2W
RV303	1-228-867-00	RES, VAR, METAL 2K
RV301, 302	1-228-868-00	RES, VAR, METAL 10K
R323, 350	1-246-525-00	RES, CARBON 150K 5% 1/4W
R336	1-246-543-00	RES, CARBON 820K 5% 1/4W
R332, 358	1-247-083-00	RES, CARBON 10 5% 1/4W
R319, 324, 325, 337	1-247-107-00	RES, CARBON 100 5% 1/4W
R314, 318, 326, 331, 338, 339, 347, 359	1-247-131-00	RES, CARBON 1K 5% 1/4W
R309	1-247-141-00	RES, CARBON 2.7K 5% 1/4W
R310, 330	1-247-143-00	RES, CARBON 3.3K 5% 1/4W
R312, 335	1-247-147-00	RES, CARBON 4.7K 5% 1/4W
R322, 329	1-247-149-00	RES, CARBON 5.6K 5% 1/4W
R308	1-247-152-00	RES, CARBON 7.5K 5% 1/4W
R311, 313, 328, 348, 353	1-247-155-00	RES, CARBON 10K 5% 1/4W
R352	1-247-159-00	RES, CARBON 15K 5% 1/4W
R356	1-247-161-00	RES, CARBON 18K 5% 1/4W
R349, 354	1-247-167-00	RES, CARBON 33K 5% 1/4W
R357	1-247-171-00	RES, CARBON 47K 5% 1/4W

Ref. No. or Q'ty	Part No.	Description
(AC-39 BOARD, POWER SUPPLY)		
R351, 355	1-247-175-00	RES, CARBON 68K 5% 1/4W
R327	1-247-232-00	RES, CARBON 470 5% 1/2W
R321, 334, 342, 346	1-247-281-00	RES, CARBON 51K 5% 1/2W
R344, 345	1-247-269-00	RES, CARBON 16K 5% 1/2W
R320, 343	1-247-270-00	RES, CARBON 18K 5% 1/2W
R307, 340	1-214-920-00 ⚠	RES, CARBON 200K 5% 1/2W
L301, 302	1-421-532-00	COIL, CHOKE
L303	1-421-534-00 ⚠	TRANSFORMER, CHOKE
L306	1-441-855-00	COIL, CHOKE
L304, 305	1-459-215-00	COIL, CHOKE
CN309F, 310F	() 1-509-984-00	PLUG, HOUSING, 3P
	() 1-560-298-00	CONTACT, FEMALE
RY301	1-515-450-00 ⚠	RELAY, 12V 180-OHM
F301	1-532-496-00 ⚠	FUSE, 109C
CN303M	() 1-560-176-00 ⚠	RECEP, 2P, MALE
CN312M	() 1-560-177-00 ⚠	RECEP, 4P, MALE
CN309M, 310M	() 1-560-300-00	RECEP, 3P, MALE
CN305M, 311M	() 1-560-310-00	RECEP, 4P, MALE
C306M	() 1-560-753-00	RECEP, 5P, MALE
CN308M	() 1-560-888-00	RECEP, 3P, MALE
CN307M	() 1-560-889-00	RECEP, 5P, MALE
CN304F	() 1-561-977-00 ⚠	RECEP, 2P, FEMALE
CN301F	() 1-561-978-00 ⚠	RECEP, 3P, FEMALE
CN302F	() 1-561-979-00 ⚠	RECEP, 4P, FEMALE
D332	8-719-100-34	DIODE RD5.6E-B1

Ref.No. or Q'ty	Part No.	Description
(AC-39 BOARD,POWER SUPPLY)		
D303,304,314,318,323	8-719-100-40	DIODE RD6.8E-B1
D334	8-719-100-56	DIODE RD10E-B1
D306,307	8-719-100-70	DIODE RD15E-B1
D310	8-719-100-98	DIODE RD30E-B2
D311	8-719-104-17	DIODE 2P5M
D308	8-719-107-87	DIODE 03P2M
D312,313,321,322	8-719-110-00	DIODE RD100E
D309,320	8-719-200-02	DIODE 10E2
PH301	8-719-411-12	PHOTOINTERRUPTER ON1102
D301	8-719-500-07	⚠ DIODE S25VB60
D302,305,315,316,317, 319,324,325,326,327, 333	8-719-815-55	DIODE 1S1555
D328,329,330,331	8-719-911-55	DIODE U05G
Q304	8-729-177-43	TRANSISTOR 2SD774
Q303	8-729-217-33	TRANSISTOR 2SC1173
Q302,308	8-729-612-77	TRANSISTOR 2SA1027R
Q301,305,306,307,309	8-729-663-47	TRANSISTOR 2SC1364
IC301	8-759-132-40	IC UPC324C

Ref.No. or Q'ty	Part No.	Description
FV-02 BOARD (BVH-2000PS,2180PS/POWER SUPPLY)		
1pc	() A-4925-004-B	⚠ COMPLETE PCB,FV-02
(This assembly includes the following parts.)		
1pc	() A-4925-011-B	COMPLETE PCB,FV-03
1pc	() A-4925-012-A	COMPLETE PCB,CT-36-2
1pc	() A-4925-013-A	COMPLETE PCB,CT-36-3
Q601&602, 603&604	X-3673-684-0	TRANSISTOR 2SC2555,2pcs This part is the kit of two transistors. Replace Q601&602 at the same time. Replace Q603&604 at the same time.
C617,633	1-108-587-00	CAP,MYLAR 0.022 5% 50V
C635,636	1-123-324-00	CAP,ELECT 1000 16V
C603,604,619,620	1-123-601-00	CAP,ELECT 4.7 250V
C613,629,640,684,691	1-123-961-00	CAP,ELECT 330 16V
C608,609,610,624,625 626,699	1-124-129-00	CAP,ELECT 2200 25V
C602,618	1-125-290-00	CAP,ELECT 47 400V
C611,612,614,615,616, 627,628,630,631,632, 637,638,639,641,681, 682,683,685,690,692	1-130-777-00	CAP,POLY 0.1 10% 100V
C601	1-130-808-00	CAP,POLY 0.22 10% 400V
C605,621	1-161-740-00	⚠ CAP,CERAMIC 470PF 10% 400V
C606,622,642,643,644	1-161-741-00	⚠ CAP,CERAMIC 0.001 10% 400V

Ref.No. or Q'ty	Part No.	Description
(FV-02 BOARD,POWER SUPPLY)		
C607,623,634	1-161-742-00	⚠ CAP,CERAMIC 0.0022 20% 400V
C686,687,688,689	1-161-915-00	CAP,CERAMIC 0.001 10% 500V
R604,613	1-205-622-00	RES,WIREWOUND 33 5% 5W
R606,615,618	1-205-623-00	RES,WIREWOUND 47 5% 5W
R605,614	1-205-631-00	RES,WIREWOUND 15 5% 5W
R603,612	1-205-641-00	RES,WIREWOUND 330 5% 5W
R607,616	1-205-657-00	RES,WIREWOUND 150 5% 5W
R621	1-244-941-00	RES,CARBON 680K 5% 1/2W
R608,617	1-247-079-00	RES,CARBON 4.7 5% 1/4W
R601,602,610,611	1-247-087-00	RES,CARBON 15 5% 1/4W
R619	1-247-123-00	RES,CARBON 470 5% 1/4W
R609,620	1-247-244-00	RES,CARBON 1500 5% 1/2W
L681	1-421-225-00	FILTER,LINE
L610	1-421-259-00	FILTER,LINE
L609	1-421-370-00	COIL,CHOKE
L608	1-421-431-00	COIL,CHOKE
T603,606	1-421-460-00	⚠ TRANSFORMER,CURRENT
L601	1-421-470-21	FILTER,LINE
L603,606	1-421-506-00	COIL,CHOKE
L602,605	1-421-531-00	COIL,CHOKE
L604,607	1-421-535-00	FILTER,LINE
L682	1-421-538-00	FILTER,LINE
T602,605	1-447-106-00	⚠ TRANSFORMER,DRIVE
T601	1-447-329-00	⚠ TRANSFORMER,CONVERTER
T604	1-447-330-00	⚠ TRANSFORMER,CONVERTER

Ref.No. or Q'ty	Part No.	Description
(FV-02 BOARD,POWER SUPPLY)		
FB601,602,603,604,605, 606,607,608,609,610, 611,612,613,614	1-543-060-00	BEAD,FERRITE
S602	1-554-047-00	SWITCH,THERMAL REED 90°C
S601	1-554-047-21	SWITCH,THERMAL REED 70°C
CN601M ()	1-560-176-00	RECEP,2P,MALE
CN603M ()	1-560-300-00	RECEP,3P,MALE
CN602M ()	1-560-305-00	RECEP,10P,MALE
CN930M,931M ()	1-560-309-00	RECEP,3P,MALE
CN926M ()	1-560-314-00	RECEP,10P,MALE
CN927M ()	1-560-887-00	RECEP,17P,MALE
D608	8-719-100-67	DIODE RD13E-B1
D607	8-719-300-29	DIODE CTG-31S
D603,606	8-719-820-15	LED,TLG115A,GRN
D601,602,604,605	8-719-902-43	DIODE ESAD33-02CS
Q605	8-729-331-53	TRANSISTOR 2SC2315

Ref.No. or Q'ty	Part No.	Description
VV-01 BOARD (BVH-2000PS,2180PS/POWER SUPPLY)		
1pc	() A-4925-003-B	⚠ COMPLETE PCB,VV-01
(This assembly includes the following parts.)		
4pcs	() A-4925-006-A	COMPLETE PCB,CT-37
3pcs	() A-4925-015-A	COMPLETE PCB,CT-36-7
Q201&202, 205&206, 209&210	X-3673-684-0	TRANSISTOR 2SC2555,2pcs This part is the kit of two transistors. Replace Q201&Q202 at the same time. Replace Q205&Q206 at the same time. Replace Q209&Q210 at the same time.
C212,227,241	1-106-190-00	CAP,MYLAR 0.0056 5% 100V
C265,266,267	1-108-377-00	CAP,MYLAR 0.01 10% 100V
C208,214,222,229,237, 244,252	1-108-587-00	CAP,MYLAR 0.022 5% 50V
C204,205,219,220,234, 235	1-123-601-00	CAP,ELECT 4.7 250V
C217,232,247,255	1-123-961-00	CAP,ELECT 330 16V
C216,231,246,254	1-124-131-00	CAP,ELECT 47 100V
C211,213,215,226,228, 230,242,243,245,250, 251,253	1-124-132-00	CAP,ELECT 330 100V
C202,203	1-125-290-00	CAP,ELECT 47 400V
C207,209,218,223,224, 233,238,239,248,256, 260,261,262,263,264	1-130-777-00	CAP,POLY,0.1 10% 100V
(VV-01 BOARD,POWER SUPPLY)		
C201	1-130-808-00	CAP,POLY,0.22 10% 400V
C210,225,240	1-161-740-00	⚠ CAP,CERAMIC 470PF 10% 400V
C206,221,236,249,257, 258,259	1-161-741-00	⚠ CAP,CERAMIC 0.001 10% 400V
R205,215,223,232,238, 247,256	1-205-623-00	RES,WIREWOUND 47 5% 5W
R207,208,224,225,241, 242,252,253	1-205-624-00	RES,WIREWOUND 100 5% 5W
R201,218,235	1-205-625-00	RES,WIREWOUND 220 5% 5W
R206,221,239	1-205-657-00	RES,WIREWOUND 150 5% 5W
R212,229,246,255	1-217-596-00	RES,METAL 0.05 10% 2W
R262	1-244-941-00	RES,CARBON 680K 5% 1/2W
R213,230,249,257	1-247-071-00	RES,CARBON 1 5% 1/4W
R204,222,240	1-247-080-00	RES,CARBON 5.6 5% 1/4W
R202,203,219,220,236, 237	1-247-087-00	RES,CARBON 15 5% 1/4W
R214,231,250,258	1-247-107-00	RES,CARBON 100 5% 1/4W
R216,233,248,263	1-247-125-00	RES,CARBON 560 5% 1/4W
R211,228,244	1-247-161-00	RES,CARBON 18K 5% 1/4W

Ref. No. or Q'ty	Part No.	Description
(VV-01 BOARD, POWER SUPPLY)		
R209, 226, 245	1-247-167-00	RES, CARBON 33K 5% 1/4W
R217, 234, 251	1-247-168-00	RES, CARBON 36K 5% 1/4W
R210, 227, 243	1-247-176-00	RES, CARBON 75K 5% 1/4W
R254	1-247-274-00	RES, CARBON 27K 5% 1/2W
L205, 210, 215, 220	1-421-329-00	COIL, CHOKE
L206, 211, 216, 221	1-421-458-00	FILTER, LINE
T202, 206, 210	1-421-460-00	⚠ TRANSFORMER, CURRENT
L201	1-421-470-21	FILTER, LINE
L202, 207, 212, 217	1-421-539-00	COIL, CHOKE
L204, 209, 214, 219	1-421-540-00	COIL, CHOKE
T204, 208, 212, 213	1-437-114-00	TRANSFORMER, DRIVE
T203, 207, 211	1-447-106-00	⚠ TRANSFORMER, DRIVE
T201, 205	1-447-334-00	⚠ TRANSFORMER, CONVERTER
T209	1-447-335-00	⚠ TRANSFORMER, CONVERTER
FB201, 202, 203, 204, 205, 206, 207, 209, 210, 211, 212, 213, 215, 216, 217, 218, 219, 221, 222, 223, 224, 225, 227, 228, 229, 230	1-543-060-00	BEAD, FERRITE
CN201M ()	1-560-176-00	RECEP, 2P, MALE

Ref. No. or Q'ty	Part No.	Description
(VV-01 BOARD, POWER SUPPLY)		
CN202M, 203M ()	1-560-303-00	RECEP, 6P, MALE
CN925M ()	1-560-313-00	RECEP, 8P, MALE
CN924M ()	1-560-886-00	RECEP, 11P, MALE
D204, 208, 212, 216	8-719-300-29	DIODE CTG-31S
D201, 205, 209, 213	8-719-300-52	DIODE CTU-38R
D202, 206, 210, 214	8-719-300-53	DIODE CTU-38S
D203, 207, 211, 215	8-719-981-01	DIODE ERA81-004
Q204, 208, 212, 214	8-729-177-43	TRANSISTOR 2SD774
Q203, 207, 211, 213	8-729-906-51	TRANSISTOR 2SC2944-02

FV-01 BOARD (BVH-2000PS, 2180PS/POWER SUPPLY)

1pc ()	A-4925-002-B	⚠ COMPLETE PCB, FV-01

(This assembly includes the following parts.)

1pc ()	A-4925-005-A	COMPLETE PCB, CT-36-1
1pc ()	A-4925-007-A	COMPLETE PCB, CT-38
1pc ()	A-4925-008-A	COMPLETE PCB, PA-19
1pc ()	A-4925-009-A	COMPLETE PCB, ST-21
1pc ()	A-4925-014-A	COMPLETE PCB, CT-36-4

Ref.No. or Q'ty	Part No.	Description
(FV-01 BOARD,POWER SUPPLY)		
Q101&102, 103&104	X-3673-684-0	TRANSISTOR 2SC2555,2pcs This part is the kit of two transistors. Replace Q101&102 at the same time. Replace Q103&104 at the same time.
Q105&106	X-3673-685-0	TRANSISTOR 2SC2654,2pcs This part is the kit of two transistors. Replace Q105&106 at the same time.
C180	1-106-172-00	CAP,MYLAR 0.001 5% 100V
C112,135	1-108-587-00	CAP,MYLAR 0.022 5% 50V
C175,177,179	1-123-356-00	CAP,ELECT 10 50V
C103,104,123,124	1-123-601-00	CAP,ELECT 4.7 250V
C127,128,148,151,152, 153,154,155,156,157, 158,159,160,161,162, 163,164,165,166,167, 168,169,170,174,176, 178	1-123-876-00	CAP,ELECT 330 25V
C121,146,150	1-123-961-00	CAP,ELECT 330 16V
C113,114,115,116,117	1-123-962-00	CAP,ELECT 2200 16V
C137,171,172	1-124-126-00	CAP,ELECT 47 25V
C140,141,143,144	1-124-129-00	CAP,ELECT 2200 25V
C102,122	1-125-290-00	CAP,ELECT 47 400V
C181	1-130-711-00 ⚠	CAP,POLY 0.22 20% 250V
C106,107,108,111,118, 119,120,132,133,134, 139,145,147,149	1-130-777-00	CAP,POLY 0.1 10% 100V

Ref.No. or Q'ty	Part No.	Description
(FV-01 BOARD,POWER SUPPLY)		
C101,125	1-130-808-00	CAP,POLY 0.22 10% 400V
C173	1-130-918-00	CAP,POLYPROPYLENE 200PF 5% 50V
C105,126,138,142	1-161-740-00 ⚠	CAP,CERAMIC 470PF 10% 400V
C109,129,130,131	1-161-741-00 ⚠	CAP,CERAMIC 0.001 10% 400V
C110	1-161-742-00 ⚠	CAP,CERAMIC 0.0022 20% 400V
C136	1-161-925-00	CAP,CERAMIC 100PF 10% 500V
R110,116,117	1-205-622-00	RES,WIREWOUND 33 5% 5W
R119	1-205-623-00	RES,WIREWOUND 47 5% 5W
R105,118	1-205-625-00	RES,WIREWOUND 220 5% 5W
R109	1-205-631-00	RES,WIREWOUND 15 5% 5W
R101,102,111,112	1-205-657-00	RES,WIREWOUND 150 5% 5W
R141,142	1-205-658-00	RES,WIREWOUND 0.22 5% 5W
R135,138	1-206-656-00	RES,METAL 470 5% 2W
R123	1-217-596-00	RES,METAL 0.05 10% 2W
R106,120	1-247-079-00	RES,CARBON 4.7 5% 1/4W
R103,104,113,114	1-247-087-00	RES,CARBON 15 5% 1/4W
R126,127	1-247-099-00	RES,CARBON 47 5% 1/4W
R134	1-247-107-00	RES,CARBON 100 5% 1/4W
R137,140	1-247-108-00	RES,CARBON 110 5% 1/4W
R122,133,144,145	1-247-131-00	RES,CARBON 1K 5% 1/4W
R131,136,139	1-247-143-00	RES,CARBON 3300 5% 1/4W

Ref.No. or Q'ty	Part No.	Description
(FV-01 BOARD,POWER SUPPLY)		
R132	1-247-147-00	RES,CARBON 4700 5% 1/4W
R107,108,143	1-247-200-00	RES,CARBON 22 5% 1/2W
R129	1-247-232-00	RES,CARBON 470 5% 1/2W
R115,130	1-247-242-00	RES,CARBON 1200 5% 1/2W
R128	1-247-246-00	RES,CARBON 1800 5% 1/2W
R121	1-247-264-00	RES,CARBON 10K 5% 1/2W
L112,132	1-421-225-00	FILTER,LINE
L107,109	1-421-370-00	COIL,CHOKE
L111,113,115,117,118, 120,122,124,126,128, 130	1-421-421-00	COIL,CHOKE
L106,108	1-421-431-00	COIL,CHOKE
L133	1-421-458-00	FILTER,LINE
T103,107	1-421-460-00	⚠ TRANSFORMER,CURRENT
L101	1-421-470-21	FILTER,LINE
L103,104	1-421-506-00	COIL,CHOKE
L102	1-421-533-00	COIL,CHOKE
L105	1-421-535-00	FILTER,LINE
L119	1-421-536-00	FILTER,LINE
L114,116,121,123,125, 127,129,131	1-421-537-21	FILTER,LINE
T109	1-437-116-00	TRANSFORMER,PULSE
T106	1-447-053-00	⚠ TRANSFORMER,CONVERTER
T102,105	1-447-106-00	⚠ TRANSFORMER,DRIVE
T101	1-447-328-00	⚠ TRANSFORMER,CONVERTER
T104	1-447-331-00	⚠ TRANSFORMER,CONVERTER
T108	1-447-332-00	TRANSFORMER,CONVERTER
L110	1-459-123-00	COIL,CHOKE

Ref.No. or Q'ty	Part No.	Description
(FV-01 BOARD,POWER SUPPLY)		
RY101,102	1-515-482-00	RELAY,REED,12V 340-OHM
FB101,102,103,104,105, 106,107,108,109,110, 111,112,113,114	1-543-060-00	BEAD,FERRITE
S102	1-554-047-00	SWITCH,THERMAL REED 90°C
S101	1-554-047-21	SWITCH,THERMAL REED 70°C
CN101M	() 1-560-176-00	RECEP,2P,MALE
CN103M,105M	() 1-560-300-00	RECEP,3P,MALE
CN102M,104M	() 1-560-301-00	RECEP,4P,MALE
CN106M	() 1-560-305-00	RECEP,10P,MALE
CN107M	() 1-560-306-00	RECEP,12P,MALE
CN928M	() 1-560-311-00	RECEP,5P,MALE
CN923M	() 1-560-312-00	RECEP,6P,MALE
CN921M	() 1-560-315-00	RECEP,12P,MALE
CN922F	() 1-561-086-00	PLUG,HOUSING,9P
	() 1-561-067-00	CONTACT,FEMALE
D149,150,154	8-719-100-70	DIODE RD15E-B1
D153	8-719-100-87	DIODE RD22E-B3
D105,107,108,109,110, 111,112,113,114,115, 116,117,118,119,120, 121,122,123,124,125, 126,127,128,129,130, 131,132,133,134,135, 136,137,138,139,140, 141,142,143,144,145	8-719-104-07	DIODE F114F
D106	8-719-200-02	DIODE 10E2
D101,102	8-719-300-29	DIODE CTG-31S
D152	8-719-815-85	DIODE 1S1585

Ref.No. or Q'ty	Part No.	Description
(FV-01 BOARD,POWER SUPPLY)		
D146,147,148,151	8-719-820-15	LED,TLG115A,GRN
D103,104	8-719-902-43	DIODE ESAD33-02CS
Q109,111	8-729-178-54	TRANSISTOR 2SC2785
Q107	8-729-194-57	TRANSISTOR 2SC945-P
Q112,113	8-729-217-33	TRANSISTOR 2SC1173
Q108,110	8-729-331-53	TRANSISTOR 2SC2315
IC102	8-759-178-05	IC UPC78L05
IC101	8-759-245-28	IC TC4528BP,CMOS

PS-14 BOARD (BVH-2000PS,2180PS/POWER SUPPLY)

1pc	() A-6023-030-A	COMPLETE PCB,PS-14
(This assembly includes the following parts.)		
C6,16,20,25,33,38,47,50, 56,60,63,68,73	1-102-110-00	CAP,CERAMIC 220PF 10% 50V
C8,17,21,26,32,37,46,51, 55,59,64,67,72	1-102-121-00	CAP,CERAMIC 0.0022 10% 50V
C18,22,34,48,57,61,88, 89,90,91,92	1-123-308-00	CAP,ELECT 220 10V
C31	1-123-321-00	CAP,ELECT 220 16V
C24	1-123-332-00	CAP,ELECT 47 25V
C15,19,36,44,49,54,58, 62,66,71,75,98,100	1-123-333-00	CAP,ELECT 100 25V

Ref.No. or Q'ty	Part No.	Description
(PS-14 BOARD,POWER SUPPLY)		
C102	1-123-356-00	CAP,ELECT 10 50V
C82	1-123-372-00	CAP,ELECT 33 63V
C10,28,40,52,70,83,118	1-123-380-00	CAP,ELECT 1 100V
C76,81	1-123-851-00	CAP,ELECT 330 25V
C3,4	1-123-862-00	CAP,ELECT 220 25V
C13,42	1-123-880-11	CAP,ELECT,NONPOLAR 47 16V
C84,86,93,95,97	1-123-963-00	CAP,ELECT 100 25V
C9,14,27,41,43,45,53,65, 103,104,105,106,107, 108,109,110,111,112, 113,114,115,116,117	1-161-055-00	CAP,CERAMIC 0.022 10% 50V
C1,2,5,77,78,79,80,85, 87,94,96,99,101	1-161-926-00	CAP,CERAMIC 0.22 10% 50V
R70,111	1-212-364-00 ⚠	RES,METAL 2.2 5% 1W
R58	1-212-366-00 ⚠	RES,METAL 3.3 5% 1W
R75,78	1-213-135-00 ⚠	RES,METAL 220 5% 1W
R141,144,145	1-213-140-00 ⚠	RES,METAL 560 5% 1W
R231	1-214-111-00	RES,METAL 130 1% 1/4W
R232	1-214-129-00	RES,METAL 750 1% 1/4W
R269	1-214-132-00	RES,METAL 1K 1% 1/4W
R89,101	1-214-136-00	RES,METAL 1.5K 1% 1/4W
R207,218	1-214-140-00	RES,METAL 2.2K 1% 1/4W
R155,178,191	1-214-144-00	RES,METAL 3.3K 1% 1/4W
R67,108,124	1-214-147-00	RES,METAL 4.3K 1% 1/4W

Ref.No. or Q'ty	Part No.	Description
(PS-14 BOARD,POWER SUPPLY)		
R135,163,200,212	1-214-149-00	RES,METAL 5.1K 1% 1/4W
R96	1-214-150-00	RES,METAL 5.6K 1% 1/4W
R85,87,151,153,174,176, 185,187,221,223	1-214-151-00	RES,METAL 6.2K 1% 1/4W
R98	1-214-152-00	RES,METAL 6.8K 1% 1/4W
R133,161,198,210	1-214-153-00	RES,METAL 7.5K 1% 1/4W
R69,110,122	1-214-158-00	RES,METAL 12K 1% 1/4W
R68,109,123	1-214-163-00	RES,METAL 20K 1% 1/4W
R226,230	1-214-164-00	RES,METAL 22K 1% 1/4W
R86,97,134,152,162,175, 186,199,211,222	1-214-167-00	RES,METAL 30K 1% 1/4W
R126	1-214-170-00	RES,METAL 39K 1% 1/4W
R259	1-217-212-00 ⚠	RES,WIREWOUND 10 10% 2W
R10,13,37,43,46,49	1-217-237-00 ⚠	RES,WIREWOUND 0.1 10% 3W
R1,4,7,16,19,22,25	1-217-241-00 ⚠	RES,WIREWOUND 0.22 10% 3W
R28,31,34,40,52,55	1-217-243-00 ⚠	RES,WIREWOUND 0.33 10% 3W
R260,261	1-217-259-00 ⚠	RES,WIREWOUND 6.8 10% 3W
R258	1-217-294-00 ⚠	RES,WIREWOUND 4.7 10% 5W
RV1,2,3,4,5,6,7,8,9,10, 11,12,13	1-230-843-11	RES,VAR,METAL 10K

Ref.No. or Q'ty	Part No.	Description
(PS-14 BOARD,POWER SUPPLY)		
R79,104,129,242,243,245, 249,251	1-247-078-00	RES,CARBON 3.9 5% 1/4W
R240	1-247-082-00	RES,CARBON 8.2 5% 1/4W
R267	1-247-120-00	RES,CARBON 360 5% 1/4W
R265,270	1-247-131-00	RES,CARBON 1K 5% 1/4W
R266	1-247-137-00	RES,CARBON 1.8K 5% 1/4W
R279	1-247-158-00	RES,CARBON 13K 5% 1/4W
R61	1-247-180-00 ⚠	RES,CARBON 1 5% 1/2W
R234,235,236,238,239, 241,244,246,247,248, 250,252,253,255,256	1-247-783-00	RES,CARBON 10 5% 1/6W
R205,216	1-247-807-00	RES,CARBON 100 5% 1/6W
R2,5,8,11,14,29,32,35, 38,41,44,48,51,53,56	1-247-815-00	RES,CARBON 220 5% 1/6W
R277	1-247-816-00	RES,CARBON 240K 5% 1/6W
R15	1-247-819-00	RES,CARBON 330 5% 1/6W
R39,45	1-247-820-00	RES,CARBON 360 5% 1/6W
R12	1-247-821-00	RES,CARBON 390 5% 1/6W
R17,20,23,26	1-247-822-00	RES,CARBON 430 5% 1/6W
R276	1-247-824-00	RES,CARBON 510 5% 1/6W
R47,50	1-247-827-00	RES,CARBON 680 5% 1/6W
R59,62,268	1-247-831-00	RES,CARBON 1K 5% 1/6W
R74,81,93,115,117	1-247-839-00	RES,CARBON 2.2K 5% 1/6W
R42	1-247-840-00	RES,CARBON 2.4K 5% 1/6W
R88,100	1-247-842-00	RES,CARBON 3K 5% 1/6W
R64,66,80,83,92,95,105, 106,120,130,132,146, 149,159,169,172,184, 194,195,215,219,254, 262,263	1-247-843-00	RES,CARBON 3.3K 5% 1/6W

Ref.No. or Q'ty	Part No.	Description
(PS-14 BOARD,POWER SUPPLY)		
R33,36,54,57,148,170, 182,272,273,274,275	1-247-847-00	RES,CARBON 4.7K 5% 1/6W
R60,63	1-247-848-00	RES,CARBON 5.1K 5% 1/6W
R30	1-247-849-00	RES,CARBON 5.6K 5% 1/6W
R154,177,190	1-247-850-00	RES,CARBON 6.2K 5% 1/6W
R73,114,116,139,140,166, 168,203,204,264,271	1-247-855-00	RES,CARBON 10K 5% 1/6W
R227	1-247-856-00	RES,CARBON 11K 5% 1/6W
R3,6,9	1-247-860-00	RES,CARBON 16K 5% 1/6W
R18,21,24,27	1-247-863-00	RES,CARBON 22K 5% 1/6W
R72,113	1-247-869-00	RES,CARBON 39K 5% 1/6W
R71,112,125,137,164,201	1-247-870-00	RES,CARBON 43K 5% 1/6W
R65,82,94,107,118,131, 147,158,171,183,206, 217,233	1-247-871-00	RES,CARBON 47K 5% 1/6W
R138,165,202	1-247-872-00	RES,CARBON 51K 5% 1/6W
R209,220	1-247-877-00	RES,CARBON 82K 5% 1/6W
L1	1-407-713-00	INDUCTOR,MICRO,470 10%
RY1	1-515-452-00	RELAY,REED,5V 380-OHM
CN913M ()	1-560-176-00	RECEP,2P,MALE
CN911M,912M ()	1-560-178-00	RECEP,6P,MALE
CN905M,918M ()	1-560-300-00	RECEP,3P,MALE
CN917M ()	1-560-302-00	RECEP,5P,MALE
CN916M ()	1-560-303-00	RECEP,6P,MALE

Ref.No. or Q'ty	Part No.	Description
(PS-14 BOARD,POWER SUPPLY)		
CN903M,915M ()	1-560-306-00	RECEP,12P,MALE
CN902M ()	1-560-729-00	RECEP,34P,MALE
CN901M ()	1-560-731-00	RECEP,50P,MALE
CN914M ()	1-560-752-00	RECEP,9P,MALE
CN904M ()	1-560-753-00	RECEP,5P,MALE
1pc	1-570-258-12	SWITCH,THERMAL REED 90°C
19pcs	2-832-007-00	BUSHING(K),INSULATING
2pcs ()	3-303-890-01	SPRING,COMPRESSION
2pcs ()	3-651-849-00	SPACER,PANEL
TP23,24,25,26 ()	3-673-772-41	TERMINAL,TP
TP1,2,3,4,5,6,7,8,9,10, 11,12,13,14,15,16,17, 18,19,20,21,22 ()	3-673-805-01	TERMINAL,TP
TPE1,2,3,4,5,6 ()	3-673-805-11	TERMINAL,TP
2pcs	3-680-316-00	NUT,M4,NYLON
19pcs	7-628-254-45	SCREW,PS 2.6x12
1pc	7-686-447-01	SCREW,PS 3x6
8pcs	7-686-527-01	SCREW,PSW 3x6
2pcs	7-686-640-09	SCREW,B 4x20
6pcs ()	7-687-603-24	SCREW,BTP 2.6x6
2pcs	7-688-004-12	WASHER,M4,MIDDLE
D18	8-719-151-07	DIODE RD5.1E-B
D1,2,3,4,5,6,7,8,9,10, 11,12,13,15,17,20,21	8-719-815-55	DIODE 1S1555
D14	8-719-901-89	DIODE 1SS84
Q24,33,36,39,44,53	8-729-117-54	TRANSISTOR 2SA1175
Q20,22,31,37,51,54,55	8-729-177-43	TRANSISTOR 2SD774
Q21,25,28,40,45,48	8-729-374-02	TRANSISTOR 2SB740

Ref.No. or Q'ty	Part No.	Description
(PS-14 BOARD,POWER SUPPLY)		
Q27,29,42,47,50	8-729-606-32	TRANSISTOR 2SC2603
Q23,32,35,38,43,52	8-729-625-91	TRANSISTOR 2SC2259
Q26,30,41,46,49	8-729-697-92	TRANSISTOR 2SA979
Q1,2,3,6,7,8,9,10,11,12, 14,18,19	8-729-810-62	TRANSISTOR 2SD1061-R
Q4,5,13,15,16,17	8-729-882-52	TRANSISTOR 2SB825-R
IC14	8-759-103-93	IC UPC393C
IC2,6,8,10,11,12	8-759-145-57	IC UPC4557C
IC13	8-759-178-05	IC UPC78L05
IC1,3,4,5,7,9	8-759-377-23	IC HA17723G

CN-54 BOARD (BVH-2000PS,2180PS/POWER SUPPLY)

1pc	() 1-607-596-00	PC BOARD,CN-54, WITHOUT COMPONENT
C471,472,473	1-124-129-00	CAP,ELECT 2200 25V
R471	1-205-658-00	RES,WIREWOUND 0.22 5% 5W
CN470M,471M	1-560-300-00	RECEP,3P,MALE

Ref.No. or Q'ty	Part No.	Description
LA-02 BOARD (BVH-2000PS-00,02,10,12/2180PS-00,02/CN PNL)		
1pc (for 00/02/10/12 model)	() A-6013-043-A	COMPLETE PCB,LA-02
(This assembly includes the following parts.)		
Q4&9,12&17,104&108, 204&208,301&306	X-3673-688-0	TRANSISTOR KIT, 2SC1162 & 2SA715
	This part is the kit of 2SC1162 & 2SA715 Replace the following two transistors at the same time. Q4&9 Q12&17 Q104&108 Q204&208 Q310&306 2SC1162 should be used for Q4,12,104, 204 and 301. 2SA715 should be used for Q7,17,108, 208 and 306.	
C18,33,104,117,204,217, 303,318,321	1-107-077-00	CAP,MICA 47PF 5% 50V
C30,45,101,119,201,219, 306,317,323,324,325	1-107-085-00	CAP,MICA 100PF 5% 50V
C27,42,113,213,313	1-107-208-00	CAP,MICA 18PF 5% 500V
C22,37,110,210,308	1-108-579-00	CAP,MYLAR 0.01 5% 50V
C11	1-108-587-00	CAP,MYLAR 0.022 5% 50V
C23,38,109,209,309	1-109-547-00	CAP,MICA 330PF 5% 100V
C118,218,328	1-109-553-00	CAP,MICA 470PF 5% 100V
C326	1-123-318-00	CAP,ELECT 33 16V
C21,36,107,207,307	1-123-321-00	CAP,ELECT 220 16V

Ref.No. or Q'ty	Part No.	Description
(LA-02 BOARD,2000PS-00,02,10,12/2180PS-00,02,CN PNL)		
C17,26,32,41,105,114, 205,214,302,312	1-123-323-00	CAP,ELECT 470 16V
C1,2,3,4	1-123-330-00	CAP,ELECT 22 25V
C5,8,9,19,28,34,43,103, 112,116,121,203,212, 216,221,304,314,316, 319,322,327	1-123-333-00	CAP,ELECT 100 25V
C12,14,24,39,330,331	1-123-356-00	CAP,ELECT 10 50V
C329	1-131-240-00	CAP,TANT 47 20% 16V
C108,120,208,220,310, 320	1-131-359-00	CAP,TANT 10 10% 25V
C6,7,10,13,15,16,20,25, 29,31,35,40,44,102, 106,111,115,202,206, 211,215,301,305,311, 315	1-161-055-00	CAP,CERAMIC 0.022 10% 50V
R19	1-206-447-00	⚠ RES,METAL 2.2 5% 2W
R42,65	1-215-396-00	RES,METAL 91 1% 1/6W
R41,64,115,215,317	1-215-421-00	RES,METAL 1K 1% 1/6W
R31,54,105,205,305,	1-215-453-00	RES,METAL 22K 1% 1/6W
RV102,202,302	1-224-941-00	RES,VAR,METAL 20K
RV1,2,101,201,301	1-230-837-11	RES,VAR,METAL 100
RB1	1-231-410-00	RES BLOCK,10Kx8
RB2	1-231-533-00	RES BLOCK,10Kx4
R35,37,58,60,109,119, 209,219,310,312	1-247-073-00	RES,CARBON 1.5 5% 1/4W

Ref.No. or Q'ty	Part No.	Description
(LA-02 BOARD,2000PS-00,02,10,12/2180PS-00,02,CN PNL)		
R27,44,50,67,102,124, 202,224,301,321	1-247-075-00	RES,CARBON 2.2 5% 1/4W
R38,61,120,220,313	1-247-093-00	RES,CARBON 27 5% 1/4W
R48,71,123,223,322	1-247-775-00	RES,CARBON 4.7 5% 1/6W
R28,51,101,201,302	1-247-799-00	RES,CARBON 47 5% 1/6W
R29,30,52,53,106,107, 114,206,207,214,303, 304,318,338	1-247-807-00	RES,CARBON 100 5% 1/6W
R49,72,122,222,323	1-247-813-00	RES,CARBON 180 5% 1/6W
R127,130,134,227,230, 234,325,327,328,330, 336	1-247-815-00	RES,CARBON 220 5% 1/6W
R40,63,116,216,316	1-247-818-00	RES,CARBON 300 5% 1/6W
R18,33,34,56,57,110,111, 210,211,308,309	1-247-819-00	RES,CARBON 330 5% 1/6W
R135,235,339	1-247-822-00	RES,CARBON 430 5% 1/6W
R125,126,131,132,225, 226,231,232,331,332, 335,341,342	1-247-826-00	RES,CARBON 620 5% 1/6W
R36,59,108,208,311	1-247-831-00	RES,CARBON 1K 5% 1/6W
R1,2,11	1-247-839-00	RES,CARBON 2.2K 5% 1/6W
R26	1-247-843-00	RES,CARBON 3.3K 5% 1/6W
R15,129,229,329	1-247-845-00	RES,CARBON 3.9K 5% 1/6W

Ref.No. or Q'ty	Part No.	Description
(LA-02 BOARD,2000PS-00,02,10,12/2180PS-00,02,CN PNL)		
R14,20,21,22,23,24,25, 121,221,324	1-247-847-00	RES,CARBON 4.7K 5% 1/6W
R73	1-247-849-00	RES,CARBON 5.6K 5% 1/6W
R133,233,340	1-247-851-00	RES,CARBON 6.8K 5% 1/6W
R43,46,66,69,112,113, 212,213,319,320	1-247-853-00	RES,CARBON 8.2K 5% 1/6W
R4,5,6,7,8,9,10	1-247-855-00	RES,CARBON 10K 5% 1/6W
R128,228,334,337	1-247-861-00	RES,CARBON 18K 5% 1/6W
R47,70,103,203,307,326	1-247-863-00	RES,CARBON 22K 5% 1/6W
R17	1-247-864-00	RES,CARBON 24K 5% 1/6W
R12,32,55,104,204,306	1-247-865-00	RES,CARBON 27K 5% 1/6W
R3	1-247-869-00	RES,CARBON 39K 5% 1/6W
R39,45,62,68,117,118, 217,218,314,315,333	1-247-871-00	RES,CARBON 47K 5% 1/6W
R74	1-247-874-00	RES,CARBON 62K 5% 1/6W
R13	1-247-877-00	RES,CARBON 82K 5% 1/6W
R16	1-247-879-00	RES,CARBON 100K 5% 1/6W
T102,202,302	1-423-260-11	TRANSFORMER,INPUT
T1,2,101,201,301	1-427-518-00	TRANSFORMER,AUDIO OUTPUT
CN610M,611M	() 1-560-301-00	RECEP,4P,MALE

Ref.No. or Q'ty	Part No.	Description
(LA-02 BOARD,2000PS-00,02,10,12/2180PS-00,02,CN PNL)		
CN604M,607M	() 1-560-302-00	RECEP,5P,MALE
CN608M,609M,613M	() 1-560-303-00	RECEP,6P,MALE
CN602M,603M	() 1-560-304-00	RECEP,8P,MALE
CN605M,614M,615M	() 1-560-305-00	RECEP,10P,MALE
CN606M,612M	() 1-560-306-00	RECEP,12P,MALE
CN601M	1-560-755-00	RECEP,16P,MALE
12pcs	1-563-859-11	RECEPTACLE,CONNECTOR 2P
JP101,102,103,104,105, 106,107,201,202,203, 204,205,206,207,301, 302,303,304,305,306, 307	1-566-385-11	PIN,CONNECTOR 2P
TP1,2,3,4,5,6,7,8,101, 102,103,104,105,201, 202,203,204,205,301, 302,303,304,305,306, 307,308	() 3-673-805-01	TERMINAL,TP
TPE1,2,3,4,5,6,101,102, 103,104,105,201,202, 203,204,205,301,302, 303,304,305,306,307, 308	() 3-673-805-11	TERMINAL,TP
10pcs	7-621-981-15	SCREW,PSW 2.6x6
2pcs	7-686-527-01	SCREW,PSW 3x6
7pcs	7-686-528-01	SCREW,PSW 3x8
D4	8-719-151-07	DIODE RD5.1E-B
D1,2,3,5,6,101,201,301	8-719-815-55	DIODE 1S1555
D7,8	8-719-911-19	DIODE 1SS119

Ref.No. or Q'ty	Part No.	Description
(LA-02 BOARD,2000PS-00,02,10,12/2180PS-00,02,CN PNL)		
Q5,13,105,205,302	8-729-307-58	TRANSISTOR 2SC1775A
Q1	8-729-387-28	TRANSISTOR 2SA872-E
Q11,19,106,206,308	8-729-658-32	TRANSISTOR 2SC1583
Q2,3	8-729-606-32	TRANSISTOR 2SC2603
Q7,15,102,202,304	8-729-699-51	TRANSISTOR 2SA995
IC7	8-759-178-05	IC UPC78L05
IC4	8-759-240-28	IC TC4028BP,CMOS
IC5,6	8-759-240-51	IC TC4051BP,CMOS
IC3	8-759-241-75	IC TC40175BP,CMOS
IC101,201,301,302	8-759-302-65	IC HA12017
IC1	8-759-645-17	IC M54517P
IC2	8-759-901-48	IC SN74LS148N,TTL
IC303	8-759-921-91	IC TL191CN
Q6,10,14,18,103,107,203, 207,303,307	8-761-622-00	TRANSISTOR 2SC1636
Q8,16,101,201,305	8-765-020-00	TRANSISTOR 2SA884

Ref.No. or Q'ty	Part No.	Description
LA-02 BOARD (BVH-2000PS-04/14,2180PS-04/CN PNL)		
1pc	() A-6013-057-A	COMPLETE PCB,LA-02
(This assembly includes the following parts.)		
Q4&9,12&17,104&108, 204&208,301&306, 401&406	X-3673-688-0	TRANSISTOR KIT, 2SC1162 & 2SA715
	This part is the kit of 2SC1162 & 2SA715. Replace the following two transistors at the same time. Q4&9 Q12&17 Q104&108 Q204&208 Q310&306 2SC1162 should be used for Q4,12,104, 204 and 301. 2SA715 should be used for Q7,17,108, 208 and 306.	
C18,33,104,117,204,217, 303,318,321,403,417	1-107-077-00	CAP,MICA 47PF 5% 50V
C30,45,101,119,201,219, 306,317,323,324,325, 406,419	1-107-085-00	CAP,MICA 100PF 5% 50V
C27,42,113,213,313,413	1-107-208-00	CAP,MICA 18PF 5% 500V
C22,37,110,210,308,408	1-108-579-00	CAP,MYLAR 0.01 5% 50V
C11	1-108-587-00	CAP,MYLAR 0.022 5% 50V
C23,38,109,209,309,409	1-109-547-00	CAP,MICA 330PF 5% 100V
C118,218,328,421	1-109-553-00	CAP,MICA 470PF 5% 100V
C326	1-123-318-00	CAP,ELECT 33 16V
C21,36,107,207,307,407	1-123-321-00	CAP,ELECT 220 16V

Ref.No. or Q'ty	Part No.	Description
(LA-02 BOARD,2000PS-04,14/2180PS-04,CN PNL)		
C17,26,32,41,105,114, 205,214,302,312,402, 412	1-123-323-00	CAP,ELECT 470 16V
C1,2,3,4	1-123-330-00	CAP,ELECT 22 25V
C5,8,9,19,28,34,43,103, 112,116,121,203,212, 216,221,304,314,316, 319,322,327,404,414, 418,420	1-123-333-00	CAP,ELECT 100 25V
C12,14,24,39,330,331	1-123-356-00	CAP,ELECT 10 50V
C329	1-131-240-00	CAP,TANT 47 20% 16V
C108,120,208,220,310, 320,410,416	1-131-359-00	CAP,TANT 10 10% 25V
C6,7,10,13,15,16,20,25, 29,31,35,40,44,102, 106,111,115,202,206, 211,215,301,305,311, 315,401,405,411,415	1-161-055-00	CAP,CERAMIC 0.022 10% 50V
R19	1-206-447-00	⚠ RES,METAL 2.2 5% 2W
R42,65	1-215-396-00	RES,METAL 91 1% 1/6W
R41,64,115,215,317,417	1-215-421-00	RES,METAL 1K 1% 1/6W
R31,54,105,205,305,405	1-215-453-00	RES,METAL 22K 1% 1/6W
RV102,202,302,402	1-224-941-00	RES,VAR,METAL 20K
RV1,2,101,201,301,401	1-230-837-11	RES,VAR,CERMET 100
RB1	1-231-410-00	RES BLOCK,10Kx8
RB2	1-231-533-00	RES BLOCK,10Kx4

Ref.No. or Q'ty	Part No.	Description
(LA-02 BOARD,2000PS-04,14/2180PS-04,CN PNL)		
R35,37,58,60,109,119, 209,219,310,312,410, 412	1-247-073-00	RES,CARBON 1.5 5% 1/4W
R27,44,50,67,102,124, 202,224,301,321,401, 421	1-247-075-00	RES,CARBON 2.2 5% 1/4W
R38,61,120,220,313,413	1-247-093-00	RES,CARBON 27 5% 1/4W
R48,71,123,223,322,422	1-247-775-00	RES,CARBON 4.7 5% 1/6W
R28,51,101,201,302,402	1-247-799-00	RES,CARBON 47 5% 1/6W
R29,30,52,53,106,107, 114,206,207,214,303, 304,318,338,403,404, 418	1-247-807-00	RES,CARBON 100 5% 1/6W
R49,72,122,222,323,423	1-247-813-00	RES,CARBON 180 5% 1/6W
R127,130,134,227,230, 234,325,327,328,330, 336,425,427,430	1-247-815-00	RES,CARBON 220 5% 1/6W
R40,63,116,216,316,416	1-247-818-00	RES,CARBON 300 5% 1/6W
R18,33,34,56,57,110,111, 210,211,308,309,408, 409	1-247-819-00	RES,CARBON 330 5% 1/6W
R135,235,339,432	1-247-822-00	RES,CARBON 430 5% 1/6W
R125,126,131,132,225, 226,231,232,331,332, 335,341,342,428,429, 434,435	1-247-826-00	RES,CARBON 620 5% 1/6W
R36,59,108,208,311,411	1-247-831-00	RES,CARBON 1K 5% 1/6W

Ref.No. or Q'ty	Part No.	Description
(LA-02 BOARD,2000PS-04,14/2180PS-04,CN PNL)		
R1,2,11	1-247-839-00	RES,CARBON 2.2K 5% 1/6W
R26	1-247-843-00	RES,CARBON 3.3K 5% 1/6W
R15,129,229,329,426	1-247-845-00	RES,CARBON 3.9K 5% 1/6W
R14,20,21,22,23,24,25, 121,221,324,424	1-247-847-00	RES,CARBON 4.7K 5% 1/6W
R73	1-247-849-00	RES,CARBON 5.6K 5% 1/6W
R133,233,340,433	1-247-851-00	RES,CARBON 6.8K 5% 1/6W
R43,46,66,69,112,113, 212,213,319,320,419, 420	1-247-853-00	RES,CARBON 8.2K 5% 1/6W
R4,5,6,7,8,9,10	1-247-855-00	RES,CARBON 10K 5% 1/6W
R128,228,334,337,431	1-247-861-00	RES,CARBON 18K 5% 1/6W
R47,70,103,203,307,326, 407	1-247-863-00	RES,CARBON 22K 5% 1/6W
R17	1-247-864-00	RES,CARBON 24K 5% 1/6W
R12,32,55,104,204,306, 406	1-247-865-00	RES,CARBON 27K 5% 1/6W
R3	1-247-869-00	RES,CARBON 39K 5% 1/6W
R39,45,62,68,117,118, 217,218,314,315,333, 414,415	1-247-871-00	RES,CARBON 47K 5% 1/6W
R74	1-247-874-00	RES,CARBON 62K 5% 1/6W
R13	1-247-877-00	RES,CARBON 82K 5% 1/6W
R16	1-247-879-00	RES,CARBON 100K 5% 1/6W
T102,202,302,402	1-423-260-11	TRANSFORMER,INPUT

Ref.No. or Q'ty	Part No.	Description
(LA-02 BOARD,2000PS-04,14/2180PS-04,CN PNL)		
T1,2,101,201,301,401	1-427-518-00	TRANSFORMER,AUDIO OUTPUT
CN610M,611M	() 1-560-301-00	RECEP,4P,MALE
CN604M,607M	() 1-560-302-00	RECEP,5P,MALE
CN608M,609M,613M	() 1-560-303-00	RECEP,6P,MALE
CN602M,603M	() 1-560-304-00	RECEP,8P,MALE
CN605M,614M,615M	() 1-560-305-00	RECEP,10P,MALE
CN606M,612M	() 1-560-306-00	RECEP,12P,MALE
JP101,102,103,104,105, 106,107,201,202,203, 204,205,206,207,301, 302,303,304,305,306, 307,401,402,403,404, 405,406,407	1-560-733-00	PIN,SHORT
CN601M	1-560-755-00	RECEP,16P,MALE
16pcs	1-561-832-00	PLUG,SHORT
TP1,2,3,4,5,6,7,8,101, 102,103,104,105,201, 202,203,204,205,301, 302,303,304,305,306, 307,308,401,402,403, 404,405	() 3-673-805-01	TERMINAL,TP
TPE1,2,3,4,5,6,101,102, 103,104,105,201,202, 203,204,205,301,302, 303,304,305,306,307, 308,401,402,403,404, 405	() 3-673-805-11	TERMINAL,TP

Ref.No. or Q'ty	Part No.	Description
(LA-02 BOARD,2000PS-04,14/2180PS-04,CN PNL)		
12pcs	7-621-981-15	SCREW,PSW 2.6x6
7pcs	7-686-527-01	SCREW,PSW 3x6
2pcs	7-686-528-01	SCREW,PSW 3x8
D4	8-719-151-07	DIODE RD5.1E-B
D1,2,3,5,6,101,201,301, 401	8-719-815-55	DIODE 1S1555
D7,8	8-719-911-19	DIODE 1SS119
Q5,13,105,205,302,402	8-729-307-58	TRANSISTOR 2SC1775A
Q1	8-729-387-28	TRANSISTOR 2SA872-E
Q11,19,106,206,308,408	8-729-658-32	TRANSISTOR 2SC1583
Q2,3	8-729-663-47	TRANSISTOR 2SC1364
Q7,15,102,202,304,404	8-729-699-51	TRANSISTOR 2SA995
IC7	8-759-178-05	IC UPC78L05
IC4	8-759-240-28	IC TC4028BP,CMOS
IC5,6	8-759-240-51	IC TC4051BP,CMOS
IC3	8-759-241-75	IC TC40175BP,CMOS
IC101,201,301,302,401	8-759-305-50	IC CX550
IC1	8-759-645-17	IC M54517P
IC2	8-759-901-48	IC SN74LS148N,TTL
IC303	8-759-921-91	IC TL191CN
Q6,10,14,18,103,107,203, 207,303,307,403,407	8-761-622-00	TRANSISTOR 2SC1636
Q8,16,101,201,305,405	8-765-020-00	TRANSISTOR 2SA884

Ref.No. or Q'ty	Part No.	Description
VM-01 BOARD (BVH-2000PS,2180PS/CN PNL)		
1pc	() A-6011-062-A	COMPLETE PCB,VM-01
(This assembly includes the following parts.)		
C31	1-106-184-00	CAP,MYLAR 0.0033 5% 100V
C10	1-107-160-00	CAP,MICA 36PF 5% 500V
C37	1-107-169-00	CAP,MICA 100PF 5% 500V
C11	1-107-170-00	CAP,MICA 110PF 5% 500V
C6	1-107-202-00	CAP,MICA 10PF 5% 500V
C42	1-107-204-00	CAP,MICA 12PF 5% 500V
C29	1-107-209-00	CAP,MICA 20PF 5% 500V
C2,4,35	1-108-587-00	CAP,MYLAR 0.022 5% 50V
C19	1-108-593-00	CAP,MYLAR 0.039 5% 50V
C7	1-109-538-00	CAP,MICA 130PF 5% 100V
C21,36	1-109-539-00	CAP,MICA 150PF 5% 100V
C28	1-123-306-00	CAP,ELECT 47 10V
C83	1-123-308-00	CAP,ELECT 220 10V
C95,96	1-123-318-00	CAP,ELECT 33 16V
C79,81	1-123-321-00	CAP,ELECT 220 16V
C94	1-123-333-00	CAP,ELECT 100 25V
C17	1-123-379-00	CAP,ELECT 0.47 100V
C47	1-123-880-11	CAP,ELECT,NONPOLAR 47 16V
C44,50,57,58	1-123-901-00	CAP,ELECT 2.2 50V
C1,3,8,9,15,16,18,20,22, 23,24,25,26,27,30,32, 33,34,38,39,40,41,43, 45,46,48,49,51,52,53, 54,61,63,64,66,67,69, 70,71,72,73,74,75,76, 77,88,89,90,91,92,93, 103,104,105,106,107, 108,109,110,120,121	1-161-051-00	CAP,CERAMIC 0.01 10% 50V
C5,78,80,82,84,85,86	1-161-057-00	CAP,CERAMIC 0.033 10% 50V

Ref.No. or Q'ty	Part No.	Description
(VM-01 BOARD,CN PNL)		
R102,104,105,132	1-214-100-00	RES,METAL 47 1% 1/4W
R107,108,109,112,116	1-214-101-00	RES,METAL 51 1% 1/4W
R32,81,128,130,134	1-214-104-00	RES,METAL 68 1% 1/4W
R89,90,91,92	1-214-105-00	RES,METAL 75 1% 1/4W
R106	1-214-108-00	RES,METAL 100 1% 1/4W
R88,93	1-214-112-00	RES,METAL 150 1% 1/4W
R83	1-214-139-00	RES,METAL 2K 1% 1/4W
R117,120,123	1-214-156-00	RES,METAL 10K 1% 1/4W
RV5	1-228-302-00	RES,VAR,CERMET 100
RV2	1-230-838-11	RES,VAR,METAL 200
RV4,6,7,8	1-230-839-11	RES,VAR,METAL 500
RV1,3	1-230-840-11	RES,VAR,METAL 1K
RB1,2,3,4,5,6	1-231-533-00	RES BLOCK,10Kx4
R17	1-247-767-00	RES,CARBON 2.2 5% 1/6W
R140,141,142,143,144, 145,146,147,148,149, 150,151,169,170,171, 172,173,174,175,176, 179,180,185,186,188, 189,191,192,194,195, 196,197,198,199	1-247-787-00	RES,CARBON 15 5% 1/6W
R18,85	1-247-795-00	RES,CARBON 33 5% 1/6W
R114	1-247-800-00	RES,CARBON 51 5% 1/6W

Ref.No. or Q'ty	Part No.	Description
(VM-01 BOARD,CN PNL)		
R23,27,33,34,35,41,49, 68,84,94,96,98,100,101, 103,111,113,115,119, 122,125,127,129,131, 133,139,152,157,159, 166,178,181,182,184, 187,190,193,200	1-247-807-00	RES,CARBON 100 5% 1/6W
R26,40	1-247-811-00	RES,CARBON 150 5% 1/6W
R21,65	1-247-818-00	RES,CARBON 300 5% 1/6W
R38	1-247-820-00	RES,CARBON 360 5% 1/6W
R22	1-247-822-00	RES,CARBON 430 5% 1/6W
R82,118,121,124,156,158, 161,162,163,164,167, 168	1-247-823-00	RES,CARBON 470 5% 1/6W
R69,70	1-247-827-00	RES,CARBON 680 5% 1/6W
R25,62,67,86,87	1-247-831-00	RES,CARBON 1K 5% 1/6W
R64	1-247-833-00	RES,CARBON 1.2K 5% 1/6W
R24	1-247-838-00	RES,CARBON 2K 5% 1/6W
R3,6,7,14	1-247-839-00	RES,CARBON 2.2K 5% 1/6W
R73	1-247-842-00	RES,CARBON 3K 5% 1/6W
R77	1-247-845-00	RES,CARBON 3.9K 5% 1/6W
R1,2,4,5,8,9,10,11	1-247-847-00	RES,CARBON 4.7K 5% 1/6W
R42,43,44,60,61,80	1-247-848-00	RES,CARBON 5.1K 5% 1/6W
R15,20,36,46,47,50,53, 55,56,58,66,71,72,74, 78,79,97,137,138	1-247-855-00	RES,CARBON 10K 5% 1/6W
R76	1-247-858-00	RES,CARBON 13K 5% 1/6W
R63	1-247-863-00	RES,CARBON 22K 5% 1/6W
R37,48	1-247-866-00	RES,CARBON 30K 5% 1/6W
R12,13	1-247-869-00	RES,CARBON 39K 5% 1/6W

Ref.No. or Q'ty	Part No.	Description
(VM-01 BOARD,CN PNL)		
R45	1-247-872-00	RES,CARBON 51K 5% 1/6W
R19,51,57,75,126,135	1-247-879-00	RES,CARBON 100K 5% 1/6W
R95,155,160,165	1-247-886-00	RES,CARBON 200K 5% 1/6W
R54	1-247-892-00	RES,CARBON 360K 5% 1/6W
R52	1-247-903-00	RES,CARBON 1M 5% 1/6W
L1	1-408-401-00	INDUCTOR,MICRO 2.2 5%
L2	1-408-421-00	INDUCTOR,MICRO 100 5%
L3,4,5	1-409-339-00	COIL,SN
RY1,2,3,4,5,6,7,8	1-515-452-00	RELAY,REED,5V 380-OHM
FB1	1-535-178-00	FERRITE BEAD
S1,2,3	1-553-441-00	SWITCH,TOGGLE
CN656M,658M	() 1-560-310-00	RECEP,4P,MALE
CN653M	() 1-560-312-00	RECEP,6P,MALE
CN654M,655M	() 1-560-313-00	RECEP,8P,MALE
CN652M	() 1-560-314-00	RECEP,10P,MALE
CN657M	() 1-560-315-00	RECEP,12P,MALE
CN651M	() 1-560-756-00	RECEP,20P,MALE
TPE1,2	() 3-673-772-01	TERMINAL,TP
TP1,2,3	() 3-673-772-41	TERMINAL,TP
6pcs	4-866-397-00	CUSHION,LED
D14	8-719-168-07	DIODE RD6.8E-B
D1,2,3,4,5,6,7,8,13	8-719-815-55	DIODE 1S1555
D9,10,11,12	8-719-815-59	DIODE 1S1555-S
Q1,2	8-723-302-00	TRANSISTOR 2SK43-2

Ref.No. or Q'ty	Part No.	Description
(VM-01 BOARD,CN PNL)		
Q4,5	8-729-110-53	TRANSISTOR 2SA1005
Q8,9,10,11	8-759-108-01	TRANSISTOR UPA68HA-M
IC12,22,29,30,31	8-743-930-00	IC BX-3930
IC9,11,13,21,23,24,25, 26,32,33,34,35	8-743-931-10	IC BX-3931A
IC3,4	8-759-240-13	IC TC4013BP,CMOS
IC5	8-759-245-55	IC TC4555BP,CMOS
IC6,7,8	8-759-645-17	IC M54517P
IC17	8-759-901-23	IC SN74LS123N,TTL
IC1,2	8-759-901-48	IC SN74LS148N,TTL
IC19	8-759-942-65	IC SN74265N,TTL
IC18	8-759-951-07	IC SN75107AN,TTL
IC20	8-759-974-06	IC SN7406N,TTL
IC14	8-759-990-82	IC TL082CP
IC15,16	8-759-990-84	IC TL084CN
Q3	8-761-622-00	TRANSISTOR 2SC1636
Q6	8-765-300-00	TRANSISTOR 2SC2009

CN-37 BOARD (BVH-2000PS,2180PS/CN PNL)

1pc	() 1-606-713-00	PC BOARD,CN-37, WITHOUT COMPONENT

Ref.No. or Q'ty	Part No.	Description
CN-49 BOARD (BVH-2000PS,2180PS/CN PNL)		
1pc	() A-6025-082-A	COMPLETE PCB,CN-49
	() A-6025-095-A	COMPLETE PCB,CN-49 (For BVH-2000PS 10,12,14 model)
(This assembly includes the following parts.)		
CN663M	1-560-769-00	RECEP,D-SUB 15-PIN,MALE
CN662F,664F	1-561-655-00	RECEP,D-SUB 9-PIN,FEMALE
CN661F	1-561-897-00	RECEP,D-SUB 15-PIN,FEMALE
CN666F	1-561-898-00	RECEP,D-SUB 37-PIN,FEMALE
CN665F	1-561-899-00	RECEP,D-SUB 50-PIN,FEMALE

Ref.No. or Q'ty	Part No.	Description
FRAME (BVH-2000PS,2180PS)		
M1	----------	MOTOR,THREADING included in MOVABLE GUIDE ASSY. See the exploded view,MOVABLE GUIDE ASSY block.
M2	----------	MOTOR,IP ROLLER included in IP ROLLER MOTOR ASSY. See the exploded view,TAPE TRANSPORT REAR ASSY block.
RV1	----------	POTENTIOMETER,S-TENSION included in S TENSION ARM ASSY. See the exploded view,TENSION ARM & TIMER ROLLER ASSY block.
RV2	----------	POTENTIOMETER,T-TENSION included in T TENSION ARM ASSY. See the exploded view,TENSION ARM & TIMER ROLLER ASSY block.
C011,012	1-125-289-00	CAP,ELECT 4700 200V
R601,602	1-214-105-00	RES,METAL 75 1% 1/4W
1pc	1-452-266-21	RING,FG MAGNET
PM4	1-454-263-21	SOLENOID,12V 60-OHM
PM1,2	1-454-304-00	SOLENOID,12V 15/180-OHM
PM3	1-454-305-00	SOLENOID,12V 20/52-OHM
CN631F	1-507-552-21	JACK,PHONE
CN626M (for 04/14 model), 625M,627M,628M,629M, 630M	1-509-176-31	RECEP,XLR3P,MALE
CN624F (for 04/14 model), 621F,622F,623F	1-509-184-31	RECEP,XLR3P,FEMALE
CN640F	1-509-471-00	RECEP,18P,FEMALE
CN007F	() 1-509-983-00	PLUG,HOUSING,2P
	() 1-560-298-00	CONTACT,FEMALE

Ref. No. or Q'ty	Part No.	Description
(FRAME)		
CN103F (to FV-01 board), 105F (to FV-01 board), 603F (to FV-02 board), 001F, 008F, 009F, 263F, 265F, 267F, 269F, 309F, 376F, 402F, 403F, 470F, 471F, 905F, 918F, 930F, 931F	() 1-509-984-00	PLUG, HOUSING, 3P
	() 1-560-298-00	CONTACT, FEMALE
CN362F (for 04/14 model), 102F (to FV-01 board), 104F (to FV-01 board), 305F (to AC-39 board), 311F (to AC-39 board), 021F, 022F, 024F, 262F, 354F, 355F, 384F, 387F, 401F (for BVH-2180PS), 610F, 611F, 656F, 658F, 803F	() 1-509-985-00	PLUG, HOUSING, 4P
	() 1-560-298-00	CONTACT, FEMALE
CN282F (for 02/12/04/14 model), 365F (for 04/14 model), 003F, 004F, 023F, 042F (for BVH-2180PS), 112F, 261F, 353F, 361F, 373F, 374F, 377F, 386F, 604F, 607F, 805F, 808F, 917F, 928F	() 1-509-986-00	PLUG, HOUSING, 5P
	() 1-560-298-00	CONTACT, FEMALE
CN202F (to RA-05 board), 202F (to VV-01 board), 203F (to VV-01 board), 204F, 351F, 371F, 372F, 381F, 383F, 608F, 609F, 613F, 653F, 800F, 801F, 812F, 916F, 923F	() 1-509-987-00	PLUG, HOUSING, 6P
	() 1-560-298-00	CONTACT, FEMALE

Ref. No. or Q'ty	Part No.	Description
(FRAME)		
CN281F (for 02/04 model), 283F (for 02/04 model), 291F (for 02/04 model), 303F (to MB-14 board), 306F (to MB-14 board), 602F (to LA-02 board), 603F (to LA-02 board), 292F, 356F, 360F, 375F, 388F, 654F, 655F, 811F,	() 1-509-988-00	PLUG, HOUSING, 8P
	() 1-560-298-00	CONTACT, FEMALE
CN106F (to CAPSTAN MOTOR), 106F (to FV-01 board), 302F (to MB-14 board), 305F (to MB-14 board), 602F (to FV-02 board), 002F, 357F, 363F, 382F, 605F, 614F, 615F, 652F, 804F, 806F, 810F, 926F	() 1-509-989-00	PLUG, HOUSING, 10P
	() 1-560-298-00	CONTACT, FEMALE
ME4 (for 04/14 model), 1, 2, 3	1-520-450-00	METER, VU
ME5	1-520-451-00	METER, VIDEO/RF
CB301	1-532-653-00 ⚠	CIRCUIT PROTECTOR, 50mA/65V
CB302	1-532-654-00 ⚠	CIRCUIT BREAKER, 6A/240V
CB303	1-532-655-00 ⚠	CIRCUIT BREAKER, 10A/240V
TB001	() 1-536-712-00 ⚠	TERMINAL BOARD, 2P
M7, 8, 9, 10	1-541-170-21	FAN, DC 12V, FB-08B12HA
M301	1-541-203-00	FAN, DC 12V, FB-12C12L
S601, 602	1-552-078-00	SWITCH, SLIDE
S1	1-554-066-00 ⚠	SWITCH, SEESAW
S301	1-554-145-00 ⚠	SWITCH, ROCKER
1pc	1-556-371-00 ⚠	CORD, POWER

Ref.No. or Q'ty	Part No.	Description
(FRAME)		
CN041F (for BVH-2180PS), 364F (for 02/12/04/14 model), 301F (to MB-14 board), 304F (to MB-14 board), 107F,350F,352F,606F, 612F,657F,807F,809F, 903F,915F,921F		
()	1-561-056-00	PLUG,HOUSING,12P
()	1-560-298-00	CONTACT,FEMALE
CN101F (to FV-01 board), 201F (to VV-01 board), 303F (to AC-39 board), 601F (to FV-02 board), 913F		
()	1-561-069-00	PLUG,HOUSING,2P
()	1-561-067-00	CONTACT,FEMALE
CN304M (to AC-39 board)		
()	1-561-069-00	PLUG,HOUSING,2P
()	1-561-068-00	CONTACT,MALE
CN312F (to AC-39 board)		
()	1-561-070-00	PLUG,HOUSING,4P
()	1-561-067-00	CONTACT,FEMALE
CN929F ()	1-561-070-00 ⚠	PLUG,HOUSING,4P
()	1-561-067-00 ⚠	CONTACT,FEMALE
CN302M (to AC-39 board)		
()	1-561-070-00	PLUG,HOUSING,4P
()	1-561-068-00	CONTACT,MALE
CN103F (to CA-09 board), 117F,207F,209F		
()	1-561-071-00	PLUG,HOUSING,6P
	1-535-206-00	CONTACT,FEMALE
CN208F,911F,912F		
()	1-561-071-00	PLUG,HOUSING,6P
()	1-561-067-00	CONTACT,FEMALE
CN914F ()	1-561-072-00	PLUG,HOUSING,9P
()	1-561-067-00	CONTACT,FEMALE
CN922M ()	1-561-072-00	PLUG,HOUSING,9P
()	1-561-068-00	CONTACT,MALE

Ref.No. or Q'ty	Part No.	Description
(FRAME)		
CN929M ()	1-561-084-00	PLUG,HOUSING,4P
()	1-561-068-00	CONTACT,MALE
CN671F,672F,673F,674F, 675F,676F,677F,678F, 679F,680F,681F,682F, 683F,684F,685F,686F, 687F,688F		
	1-561-781-21	RECEP,BNC
CN104F (to CA-09 board), 308F (to AC-39 board), 116F ()	1-561-828-00	PLUG,HOUSING,3P
()	1-561-067-00	CONTACT,FEMALE
CN301M (to AC-39 board)		
()	1-561-828-00	PLUG,HOUSING,3P
()	1-561-068-00	CONTACT,MALE
CN924F ()	1-561-857-00	PLUG,HOUSING,11P
()	1-560-761-00	CONTACT,FEMALE
CN927F ()	1-561-858-00	PLUG,HOUSING,17P
()	1-560-761-00	CONTACT,FEMALE
CN306F (to AC-39 board), 307F (to AC-39 board), 321F,904F		
()	1-561-863-00	PLUG,HOUSING,5P
()	1-561-067-00	CONTACT,FEMALE
CN701F	1-561-888-00	PLUG,HOUSING,10P
()	1-560-768-00	CONTACT,FEMALE
CN317F ()	1-561-890-00	PLUG,HOUSING,20P
()	1-560-767-00	CONTACT,FEMALE for AWG22-24
()	1-560-768-00	CONTACT,FEMALE for AWG24-28
CN101F (to CA-09 board), 111F ()	1-561-890-00	PLUG,HOUSING,20P
()	1-560-768-00	CONTACT,FEMALE

Ref.No. or Q'ty	Part No.	Description
(FRAME)		
CN314F	() 1-561-892-00	PLUG,HOUSING,30P
	() 1-560-767-00	CONTACT,FEMALE for AWG22-24
	() 1-560-768-00	CONTACT,FEMALE for AWG24-28
CN325F	() 1-561-892-00	PLUG,HOUSING,30P
	() 1-560-768-00	CONTACT,FEMALE
CN203F (to RA-05 board), 010F	() 1-561-893-00	PLUG,HOUSING,34P
	() 1-560-768-00	CONTACT,FEMALE
CN902F	() 1-561-893-00	PLUG,HOUSING,34P
	() 1-560-767-00	CONTACT,FEMALE for AWG22-24
	() 1-560-768-00	CONTACT,FEMALE for AWG24-28
CN322F	() 1-561-894-00	PLUG,HOUSING,40P
	() 1-560-767-00	CONTACT,FEMALE for AWG22-24
	() 1-560-768-00	CONTACT,FEMALE for AWG24-28
CN313F	() 1-561-895-00	PLUG,HOUSING,50P
	() 1-560-768-00	CONTACT,FEMALE
CN901F	() 1-561-895-00	PLUG,HOUSING,50P
	() 1-560-767-00	CONTACT,FEMALE for AWG22-24
	() 1-560-768-00	CONTACT,FEMALE for AWG24-28
CN326F	() 1-561-896-00	PLUG,HOUSING,60P
	() 1-560-768-00	CONTACT,FEMALE
1pc	1-933-205-00	FLAT CABLE ASSY, "DSH-1",60P
includes CN316F & 667F.		
1pc (for 02/12/04/14 model)	1-933-206-00	COAXIAL CABLE ASSY, "CCH-1"
includes CN264F,266F,268F,270F,271F,272F,307F,308F, 309F,310F,311F & 312F.		

Ref.No. or Q'ty	Part No.	Description
(FRAME)		
1pc	1-933-220-00	FLAT CABLE ASSY, "CPH-2",26P
includes CN324F & 702F.		
1pc	() 1-933-221-00	FLAT CABLE ASSY, "DSH-2",60P
includes CN315F,601F,651F,668F & 821F.		
1pc	1-933-222-00	FLAT CABLE ASSY, "ASH-1",34P
includes CN261F,323F,385F & 810F.		
1pc (for 00/10 model)	1-933-561-00	COAXIAL CABLE ASSY "CCH-2"
includes CN264F,266F,268F,270F,307F,308F, 311&312.		
H1	8-825-725-10	HEAD,VIDEO/SYNC ERASE, EF204-5102
H2 (for 00/10/02/12 model)	8-825-725-50	HEAD,AUDIO ERASE, EF204-5104B
H2 (for 04/14 model)	8-825-725-70	HEAD,AUDIO ERASE, EF204-5105A
H3 (for 00/02/10/12 model)	8-825-771-01	HEAD PA77-5104F
H4 (for 02/12 model)	8-825-771-01	HEAD PA77-5104F
H3 (for 04/14 model)	8-825-737-60	HEAD,AUDIO R/P, PA77-5105B
H4 (for 04/14 model)	8-825-737-70	HEAD,AUDIO MONITOR, PA77-5105C
M3	8-838-028-01	MOTOR,DC,S-REEL, BHF-2200A

Ref.No. or Q'ty	Part No.	Description
(FRAME)		
M4	8-838-028-11	MOTOR,DC,T-REEL, BHF-2200B
M5	8-838-029-01	MOTOR,DC,CAPSTAN, BHF-2300A

Ref.No. or Q'ty		Part No.	Description
ACCESSORIES SUPPLIED (BVH-2000PS,2180PS)			
1pc		1-506-421-00	ADAPTOR,PLUG,PHONE
1pc		1-560-771-00	PLUG,D-SUB,37-PIN,MALE
1pc		1-560-772-00	PLUG,D-SUB,50-PIN,MALE
1pc		1-563-378-11	SHELL,METAL PLATING,D-SUB,37P
1pc		1-563-379-11	SHELL,METAL PLATING,D-SUB,50P
1pc		3-680-379-01	PC BOARD INDICATION PANEL
6pcs		7-682-578-04	SCREW,+B 5x16
6pcs		7-623-212-22	SPRING WASHER,M5
6pcs		7-688-005-03	WASHER,M5,SMALL
1pc		commercially available	REEL,EMPTY,R1-11V (for 2000) REEL,EMPTY,R1-14V (for 2180)
1pc		A-6001-005-A	EXTENSION BOARD,EB-10
(This assembly includes the following parts.)			
R3		1-247-115-00	RES,CARBON 220 5% 1/4W
R1,2		1-247-126-00	RES,CARBON 620 5% 1/4W
1pc		1-508-892-00	CONNECTOR,PCB,100P
178pcs	()	3-657-235-00	TERMINAL,TP
6pcs		7-621-981-15	SCREW,PSW2.6x6
4pcs		7-684-023-04	NUT,M3
4pcs		7-686-448-01	SCREW,PS3x8
D2		8-719-913-50	LED,GL3PG5,GRN
D3		8-719-930-33	LED,GL3PR3,RED
D1		8-719-930-53	LED,GL3HY3,YEL
1pc	()	A-6030-052-A	STOPPER ASSY,PC BOARD

Ref.No. or Q'ty	Part No.	Description
OPTIONAL FIXTURE (BVH-2000PS,2180PS)		
	2-034-697-00	CLEANING PIECE
	7-700-733-01	ALIGNMENT SCREWDRIVER, SLOTTED HEAD
	7-721-050-61	SCREWDRIVER,TOTSU,2mm
	7-721-050-62	SCREWDRIVER,TOTSU,2.6mm
	8-944-005-63	ALIGNMENT TAPE, BR5-2PS-A4
	J-6041-770-A	IC TEST CLIP,TC-16
	J-6041-780-A	IC TEST CLIP,TC-20
	Manufacturer; AP Products Incorporated P.O.BOX 697,72 Corwin Drive Painesville,Ohio 44077,USA TEL:(216)354-2101	
	J-6043-640-A	SWITCHING REGULATOR ADJUSTMENT FIXTURE
	J-6043-720-A	BRAKE ADJUSTMENT FIXTURE
	When using the following fixture,contact your sony service office.	
	J-6043-870-A	GUIDE FLANGE FIXTURE
	(This fixture includes the following spacer.)	
	J-6044-000-A	SPACER
	commercially available	DEMAGNETIZER,SONY HE-4
	J-6043-230-C	BVH-2000 TOOL KIT
	(This kit consists of the following.)	
	J-6041-700-A	ALLEN WRENCH SET, L-SHAPED HEX.
	7-700-751-02	NUT DRIVER,5.5mm
	7-700-766-02	SCREWDRIVER,HEX,1.4mm
	7-700-766-03	SCREWDRIVER,HEX,2mm
	7-700-766-04	SCREWDRIVER,HEX,2.5mm

Ref.No. or Q'ty	Part No.	Description
(OPTIONAL FIXTURE)		
	7-721-050-63	SCREWDRIVER,TOTSU,3mm
	7-721-050-64	SCREWDRIVER,TOTSU,4mm
	J-6040-160-A	PLATE,FLAT
	J-6040-460-A	SCREW,TAPERED
	This part contains two screws.	
	J-6250-800-A	ADJUSTMENT GAUGE, DRUM ECCENTRICITY
	J-6041-640-A	TENSION SCALE,5kg
	J-6041-670-A	THICKNESS GAUGE
	J-6043-120-B	TENSION ADJUSTMENT TOOL
	J-6043-380-A	CARRYING CASE

SECTION E
CHANGED PARTS

UP TO #33399 (BVH-2000PS)

#33401 & UP (BVH-2000PS)

MB-14A BOARD (BVH-2000PS,2180PS/CARD RACK)

CN402M,403M				
	1-560-309-00	RECEP,3P,MALE	1-560-300-00	RECEP,3P,MALE

UP TO #33499 (BVH-2000PS)

#33501 & UP (BVH-2000PS)

MD-14 BOARD (BVH-2000PS,2180PS/CARD RACK)

C507	NOT IN USE		1-107-158-00	CAP,MICA 30PF 5% 500V
C510	1-107-158-00	CAP,MICA 30PF 5% 500V	DELETED	
D31,32,33,34,35,36				
	NOT IN USE		8-719-101-98	DIODE 1SS97
IC8	8-759-100-91	IC UPC91A	DELETED	
L1,2,3,4				
	1-407-169-XX	INDUCTOR,MICRO,100 5%	1-408-421-00	INDUCTOR,MICRO,100 5%
L5,6	1-409-339-00	COIL,SN	1-421-329-00	COIL,CHOKE
L11	1-407-169-00	INDUCTOR,MICRO,100 5%	1-408-421-00	INDUCTOR,MICRO,100 5%
L15	1-409-339-00	COIL,SN	1-421-329-00	COIL,CHOKE
R301,302				
	NOT IN USE		1-215-437-00	RES,METAL 4.7K 1% 1/6W
RV10,18				
	1-230-144-00	RES,VAR,COMP 1K(B)	1-230-739-11	RES,VAR,CARBON 1K
TP1,2,3,4,5,6,7,8,9,10				
	3-673-805-01	TERMINAL,TP	3-657-703-01	TERMINAL,TP

CD-17 BOARD (BVH-2000PS,2180PS/CARD RACK)

C49	1-108-595-00	CAP,MYLAR 0.047 5% 50V	DELETED
C12,62	1-247-879-00	RES,CARBON 100K 5% 1/6W	DELETED

UP TO #33599 (BVH-2000PS)			#33601 & UP (BVH-2000PS)	
MD-14 BOARD (BVH-2000PS,2180PS/CARD RACK)				
R514	1-247-807-00	RES,CARBON 100 5% 1/6W	1-247-814-00	RES,CARBON 200 5% 1/6W
SY-79 BOARD (BVH-2000PS,2180PS/CARD RACK)				
IC1C	8-759-762-55	IC,EPROM,MBM2732-76U3-3	8-759-764-20	IC,EPROM,MBM2732-76U3-4
IC1D	8-759-761-32	IC,EPROM,MBM2732-75U3-2	8-759-764-19	IC,EPROM,MBM2732-75U3-3
IC1E	8-759-762-54	IC,EPROM,MBM2732-74U3-2	8-759-764-18	IC,EPROM,MBM2732-74U3-3
IC1G	8-759-761-30	IC,EPROM,MBM2732-73U3-3	8-759-764-17	IC,EPROM,MBM2732-73U3-4
IC1I	8-759-761-34	IC,EPROM,MBM2732-71A3-1	8-759-764-15	IC,EPROM,MBM2732-71A3-2
IC1K	8-759-762-53	IC,EPROM,MBM2732-70U3-3	8-759-764-13	IC,EPROM,MBM2732-70U3-4
SY-80 BOARD (BVH-2000PS,2180PS/CARD RACK)				
IC1C	8-759-762-58	IC,EPROM,MBM2732-82U3-2	8-759-764-23	IC,EPROM,MBM2732-82U3-3
IC1D	8-759-762-57	IC,EPROM,MBM2732-81U3-4	8-759-764-22	IC,EPROM,MBM2732-81U3-5
IC1F	8-759-762-56	IC,EPROM,MBM2732-80U3-3	8-759-764-21	IC,EPROM,MBM2732-80U3-4
RA-05 BOARD (BVH-2000PS,2180PS/TTP)				
R55	1-247-839-00	RES,CARBON 2.2K 5% 1/6W	1-247-847-00	RES,CARBON 4.7K 5% 1/6W

UP TO #33699 (BVH-2000PS)
UP TO #10099 (BVH-2180PS)

#33701 & UP (BVH-2000PS)
#10101 & UP (BVH-2180PS)

SV-43 BOARD (BVH-2000PS,2180PS/CARD RACK)

(for BVH-2180PS)

IC1E	8-759-765-12	IC,EPROM,MBM2732-S1Q1-1	8-759-765-69	IC,EPROM,MBM2732-S1Q1-2
IC61	8-759-764-35	IC,EPROM,MBM2732-S7Q1	8-759-765-48	IC,EPROM,MBM2732-S7Q1-2

RP-09 BOARD (BVH-2000PS,2180PS/TTP)

IC2,4	8-741-115-60	IC BX1156	8-741-115-62	IC BX1156B

UP TO #33799 (BVH-2000PS) UP TO #10199 (BVH-2180PS)				#33801 & UP (BVH-2000PS) #10201 & UP (BVH-2180PS)	
DM-25 BOARD (BVH-2000PS,2180PS/CARD RACK)					
1pc	NOT IN USE		A-6026-048-A	MOUNT PCB,DM-51	
4pcs	NOT IN USE		4-812-134-11	RIVET NYLON,3.5	
C30	1-123-379-00	CAP,ELECT 0.47 100V	1-124-253-00	CAP,ELECT 0.47 50V	
C33	1-123-381-00	CAP,ELECT 2.2 100V	1-124-257-00	CAP,ELECT 2.2 50V	
C37	1-108-573-00	CAP,MYLAR 0.0056 5% 50V	DELETED		
C38	1-108-567-00	CAP,MYLAR 0.0033 5% 50V	DELETED		
C39	1-108-585-00	CAP,MYLAR 0.018 5% 50V	1-130-486-00	CAP,MYLAR 0.018 5% 50V	
C40	1-109-528-00	CAP,MICA 51PF 5% 100V	DELETED		
C41	1-109-535-00	CAP,MICA 100PF 5% 100V	DELETED		
C42	1-108-561-00	CAP,MYLAR 0.0018 5% 50V	DELETED		
C43	1-108-563-00	CAP,MYLAR 0.0022 5% 50V	1-130-475-00	CAP,MYLAR 0.0022 5% 50V	
C46	1-109-540-00	CAP,MICA 180PF 5% 100V	DELETED		
C47	1-109-528-00	CAP,MICA 51PF 5% 100V	DELETED		
C50	1-108-567-00	CAP,MYLAR 0.0033 5% 50V	DELETED		
C54	1-108-587-00	CAP,MYLAR 0.022 5% 50V	1-130-487-00	CAP,MYLAR 0.022 5% 50V	
C56	1-109-539-00	CAP,MICA 150PF 5% 100V	1-107-209-00	CAP,MICA 20PF 5% 500V	
C96,97,108	1-123-330-00	CAP,ELECT 22 25V	1-124-234-00	CAP,ELECT 22 16V	
C140	1-123-379-00	CAP,ELECT 0.47 100V	1-124-253-00	CAP,ELECT 0.47 50V	
C143	1-108-555-00	CAP,MYLAR 0.001 5% 50V	DELETED		
C152	NOT IN USE		1-124-234-00	CAP,ELECT 22 16V	
C501,502	NOT IN USE		1-161-907-00	CAP,CERAMIC 0.0012 5% 50V	
C503	NOT IN USE		1-109-541-00	CAP,MICA 200PF 5% 100V	
C504	NOT IN USE		1-109-542-00	CAP,MICA 220PF 5% 100V	
C505	NOT IN USE		1-130-471-00	CAP,MYLAR 0.001 5% 50V	
C506	NOT IN USE		1-162-136-00	CAP,CERAMIC 0.01 50V	
C507	NOT IN USE		1-109-542-00	CAP,MICA 220PF 5% 100V	
C508	NOT IN USE		1-162-136-00	CAP,CERAMIC 0.01 50V	
C509	NOT IN USE		1-109-530-00	CAP,MICA 62PF 5% 100V	
C510	NOT IN USE		1-109-541-00	CAP,MICA 200PF 5% 100V	
C511	NOT IN USE		1-109-542-00	CAP,MICA 220PF 5% 100V	
C512	NOT IN USE		1-162-136-00	CAP,CERAMIC 0.01 50V	
C513	NOT IN USE		1-109-541-00	CAP,MICA 200PF 5% 100V	
C514	NOT IN USE		1-162-136-00	CAP,CERAMIC 0.01 50V	
C515	NOT IN USE		1-124-257-00	CAP,ELECT 2.2 50V	
C516	NOT IN USE		1-130-472-00	CAP,MYLAR 0.0012 5% 50V	

UP TO #33799 (BVH-2000PS) UP TO #10199 (BVH-2180PS)			#33801 & UP (BVH-2000PS) #10201 & UP (BVH-2180PS)	
(DM-25 BOARD BVH-2000PS,2180PS/CARD RACK)				
C517,518				
	NOT IN USE		1-162-136-00	CAP,CERAMIC 0.01 50V
C519,520				
	NOT IN USE		1-130-477-00	CAP,MYLAR 0.0033 5% 50V
CN6A	NOT IN USE		1-564-929-11	CONNECTOR,PCB,14P
CN8E,9A				
	NOT IN USE		1-564-930-11	CONNECTOR,PCB,16P
IC1A	8-759-900-10	IC SN74LS10N,TTL	DELETED	
IC4A,4D				
	8-759-902-21	IC SN74LS221N,TTL	DELETED	
IC5A	8-759-901-23	IC SN74LS123N,TTL	DELETED	
IC5B	8-759-900-00	IC SN74LS00N,TTL	DELETED	
IC6B	NOT IN USE		8-759-900-10	IC SN74LS10N,TTL
IC6C,6D,6E,7B,7C				
	NOT IN USE		8-759-902-21	IC SN74LS221N,TTL
IC7D	NOT IN USE		8-759-900-74	IC SN74LS74AN,TTL
IC7E	NOT IN USE		8-759-901-23	IC SN74LS123N,TTL
IC8B	NOT IN USE		8-759-900-74	IC SN74LS74AN,TTL
IC8C,8D,9B				
	NOT IN USE		8-759-900-00	IC SN74LS00N,TTL
IC9E	NOT IN USE		8-759-902-21	IC SN74LS201N,TTL
R30	1-214-165-00	RES,METAL 24K 1% 1/4W	DELETED	
R34	1-247-866-00	RES,CARBON 30K 5% 1/6W	DELETED	
R36	1-247-867-00	RES,CARBON 33K 5% 1/6W	DELETED	
R52	1-247-878-00	RES,CARBON 91K 5% 1/6W	DELETED	
R53	1-247-879-00	RES,CARBON 100K 5% 1/6W	DELETED	
R54	1-247-831-00	RES,CARBON 1K 5% 1/6W	DELETED	
R56	1-247-838-00	RES,CARBON 2K 5% 1/6W	DELETED	
R59	1-214-160-00	RES,METAL 15K 1% 1/4W	1-214-149-00	RES,METAL 5.1K 1% 1/4W
R62	1-247-850-00	RES,CARBON 6.2K 5% 1/6W	1-247-838-00	RES,CARBON 2K 5% 1/6W
R63	1-247-863-00	RES,CARBON 22K 5% 1/6W	1-247-862-00	RES,CARBON 20K 5% 1/6W
R193	1-247-831-00	RES,CARBON 1K 5% 1/6W	DELETED	
R208	1-247-870-00	RES,CARBON 43K 1/6W	DELETED	
R501	NOT IN USE		1-215-464-00	RES,METAL 62K 1% 1/6W
R502	NOT IN USE		1-215-455-00	RES,METAL 27K 1% 1/6W
R503	NOT IN USE		1-215-460-00	RES,METAL 43K 1% 1/6W
R504	NOT IN USE		1-215-454-00	RES,METAL 24K 1% 1/6W
R505	NOT IN USE		1-215-466-00	RES,METAL 75K 1% 1/6W

UP TO #33799 (BVH-2000PS) UP TO #10199 (BVH-2180PS)				#33801 & UP (BVH-2000PS) #10201 & UP (BVH-2180PS)	
(DM-25 BOARD BVH-2000PS,2180PS/CARD RACK)					
R506	NOT IN USE		1-215-448-00	RES,METAL 13K 1% 1/6W	
R507	NOT IN USE		1-215-456-00	RES,METAL 30K 1% 1/6W	
R508	NOT IN USE		1-215-460-00	RES,METAL 43K 1% 1/6W	
R509	NOT IN USE		1-215-448-00	RES,METAL 13K 1% 1/6W	
R510	NOT IN USE		1-215-460-00	RES,METAL 43K 1% 1/6W	
R511,512	NOT IN USE		1-215-469-00	RES,METAL 100K 1% 1/6W	
R513,514,515,516	NOT IN USE		1-215-445-00	RES,METAL 10K 1% 1/6W	
R517	NOT IN USE		1-215-469-00	RES,METAL 100K 1% 1/6W	
R518	NOT IN USE		1-215-445-00	RES,METAL 10K 1% 1/6W	
R519	NOT IN USE		1-215-457-00	RES,METAL 33K 1% 1/6W	
RV501	NOT IN USE		1-228-474-00	RES,VAR,CERMET 10K	
RV502	NOT IN USE		1-228-473-00	RES,VAR,CERMET 5K	
RV503	NOT IN USE		1-228-474-00	RES,VAR,CERMET 10K	
TP501,502,503,504,505,506	NOT IN USE		2-296-824-01	TERMINAL,TP	
TPE1	3-673-805-11	TERMINAL,TP	DELETED		

MD-14 BOARD (BVH-2000PS,2180PS/CARD RACK)

L5,6,15	1-421-329-00	COIL,CHOKE	1-421-370-00	COIL,CHOKE	
R65	1-247-791-00	RES,CARBON 22 5% 1/6W	1-247-807-00	RES,CARBON 100 5% 1/6W	

LG-02(A) BOARD (BVH-2000PS,2180PS/CARD RACK)

L1	1-421-329-00	COIL,CHOKE	1-421-370-00	COIL,CHOKE	

SR-15 BOARD (BVH-2000PS,2180PS/CARD RACK)

L2,3,4	1-421-329-00	COIL,CHOKE	1-421-370-00	COIL,CHOKE	

UP TO #33799 (BVH-2000PS) UP TO #10199 (BVH-2180PS)				#33801 & UP (BVH-2000PS) #10201 & UP (BVH-2180PS)	
DT-05 BOARD (BVH-2000PS,2180PS/CARD RACK)					
L1	1-421-329-00	COIL,CHOKE		1-421-370-00	COIL,CHOKE
DD-03 BOARD (BVH-2000PS-02,04/2180PS-02,04)					
1pc (for 02/04 model)	A-6023-035-A	COMPLETE PCB,DD-03		A-6023-035-B	COMPLATE PCB,DD-03
C16	NOT IN USE			1-130-483-00	CAP,MYLAR 0.01 5% 50V
D9	NOT IN USE			8-719-911-19	DIODE 1SS119
IC3	NOT IN USE			8-759-245-39	IC TC4539BP,CMOS
R7	1-247-855-00	RES,CARBON 10K 5% 1/6W		1-247-839-00	RES,CARBON 2.2K 5% 1/6W
R8	1-247-855-00	RES,CARBON 10k 5% 1/6W		1-247-879-00	RES,CARBON 100K 5% 1/6W
R16	NOT IN USE			1-247-871-00	RES,CARBON 47K 5% 1/6W
Q18	8-729-178-54	TRANSISTOR 2SC2785		8-729-900-89	TRANSISTOR DTC144ES
Q19	NOT IN USE			8-729-900-89	TRANSISTOR DTC144ES
RA-05 BOARD (BVH-2000PS,2180PS/TTP)					
6pcs	NOT IN USE			7-623-208-22	SPRING WASHER,M2
6pcs	NOT IN USE			7-682-657-01	SCREW,+PS 3x40
6pcs	NOT IN USE			7-684-023-04	NUT,M3
12pcs	7-686-450-01	SCREW,PS 3x12		DELETED	

UP TO #33899 (BVH-2000PS) UP TO #10299 (BVH-2180PS)	#33901 & UP (BVH-2000PS) #10301 & UP (BVH-2180PS)

SV-43 BOARD (BVH-2000PS,2180PS/CARD RACK)

(for BVH-2000PS)

IC61	8-759-764-38	IC,EPROM,MBM2732-S7U3-7	8-759-765-47	IC,EPROM,MBM2732-S7U3-8

UP TO #33999 (BVH-2000PS) UP TO #10399 (BVH-2180PS)			#34001 & UP (BVH-2000PS) #10401 & UP (BVH-2180PS)	

SL-07 BOARD (BVH-2000PS-02,04/BVH-2180PS-02,04)

1pc	A-6026-023-A	MOUNTED PCB,SL-07.....	A-6026-023-B	MOUNTED PCB,SL-07

SL-08 BOARD (BVH-2000PS-02,04/BVH-2180PS-02,04)

1pc	A-6079-428-A	MOUNTED PCB,SL-08.....	A-6079-428-B	MOUNTED PCB,SL-08

SL-09 BOARD (BVH-2000PS-02,04/BVH-2180PS-02,04)

1pc	A-6079-429-B	MOUNTED PCB,SL-09.....	A-6079-429-C	MOUNTED PCB,SL-09

UP TO #34099 (BVH-2000PS) #10399 (BVH-2180PS)			#34101 & UP (BVH-2000PS) #10401 & UP (BVH-2180PS)	

SR-15 BOARD (BVH-2000PS,2180PS/CARD RACK)

R67	1-247-847-00	RES,CARBON 4.7K 5% 1/6W.....	1-247-846-00	RES,CARBON 4.3K 5% 1/6W

UP TO #34199 (BVH-2000PS) UP TO #10399 (BVH-2180PS)			#34201 & UP (BVH-2000PS) #10401 & UP (BVH-2180PS)	

DT-05 BOARD (BVH-2000PS,2180PS/CARD RACK)

R39	1-214-143-00	RES,METAL 3K 1% 1/4W.....	1-214-136-00	RES,METAL 1.5K 1% 1/4W
R146	1-247-859-00	RES,CARBON 15K 5% 1/6W.....	1-247-873-00	RES,CARBON 56K 5% 1/6W
R147	NOT IN USE.....		1-249-432-11	RES,CARBON 18K 5% 1/6W

UP TO #34299 (BVH-2000PS) UP TO #10499 (BVH-2180PS)			#34301 & UP (BVH-2000PS) #10501 & UP (BVH-2180PS)	

AP-12 BOARD (BVH-2000PS,2180PS)

IC501,601,602,603,604, 605	8-759-700-04	IC NJM2043D-D.....	8-759-602-01	IC M5220P
D507	NOT IN USE.....		8-719-930-33	LED,GL3PR3,RED

UP TO #34599 (BVH-2000PS) UP TO #10599 (BVH-2180PS)				#34601 & UP (BVH-2000PS) #10601 & UP (BVH-2180PS)	

DM-25 BOARD (BVH-2000PS,2180PS/CARD RACK)

C523	NOT IN USE		1-162-306-31	CAP,CERAMIC 0.01 30% 16V	

UP TO #34699 (BVH-2000PS) UP TO #10599 (BVH-2180PS)				#34701 & UP (BVH-2000PS) #10601 & UP (BVH-2180PS)	

EQ-02 BOARD (BVH-2000PS,2180PS/CARD RACK)

(EQ-11 BOARD)

S2	1-553-510-00	SWITCH,SLIDE	1-570-374-11	SWITCH,SLIDE	

UP TO #34799 (BVH-2000PS) UP TO #10699 (BVH-2180PS)				#34801 & UP (BVH-2000PS) #10701 & UP (BVH-2180PS)	

EQ-02 BOARD (BVH-2000PS,2180PS/CARD RACK)

C127	1-107-202-00	CAP,MICA 10PF 5% 500V	1-107-078-00	CAP,MICA 51PF 5% 50V	
R211,220	1-215-445-00	RES,METAL 10K 1% 1/6W	1-215-441-00	RES,METAL 6.8K 1% 1/6W	
RV26	1-224-941-00	RES,VAR,METAL 20K	1-224-942-00	RES,VAR,METAL 50K	
R229	1-247-888-00	RES,CARBON 240K 5% 1/6W	1-247-889-00	RES,CARBON 270K 5% 1/6W	

UP TO #34899 (BVH-2000PS) UP TO #10599 (BVH-2180PS)				#34901 & UP (BVH-2000PS) #10601 & UP (BVH-2180PS)	

CD-17 BOARD (BVH-2000PS,2180PS/CARD RACK)

C70	1-130-487-00	CAP,MYLAR 0.022 5% 50V	DELETED		
R56	1-247-847-00	RES,CARBON 4.7K 5% 1/6W	1-215-441-00	RES,METAL 6.8K 1% 1/6W	

UP TO #34899 (BVH-2000PS) UP TO #10699 (BVH-2180PS)			#34901 & UP (BVH-2000PS) #10701 & UP (BVH-2180PS)	
AE-03 BOARD (BVH-2000PS,2180PS/CARD RACK)				
C148	1-109-527-00	CAP,MICA 47PF 5% 100V	1-107-077-00	CAP,MICA 47PF 5% 50V
C150	1-109-531-00	CAP,MICA 68PF 5% 100V	1-107-081-00	CAP,MICA 68PF 5% 50V
C33	1-109-553-00	CAP,MICA 470PF 5% 100V	1-130-467-00	CAP,MYLAR 470PF 5% 50V
C149	1-109-555-00	CAP,MICA 560PF 5% 100V	1-130-468-00	CAP,MYLAR 560PF 5% 50V
C44	1-109-559-00	CAP,MICA 820PF 5% 100V	1-130-470-50	CAP,MYLAR 820PF 5% 50V
R128	1-214-105-00	RES,METAL 75 1% 1/4W	1-215-394-00	RES,METAL 75 1% 1/6W
R246	1-214-106-00	RES,METAL 82 1% 1/4W	1-215-395-00	RES,METAL 82 1% 1/6W
R274	1-214-122-00	RES,METAL 390 1% 1/4W	1-215-411-00	RES,METAL 390 1% 1/6W
R249	1-214-124-00	RES,METAL 470 1% 1/4W	1-215-413-00	RES,METAL 470 1% 1/6W
R273	1-214-125-00	RES,METAL 510 1% 1/4W	1-215-414-00	RES,METAL 510 1% 1/6W
R138	1-214-146-00	RES,METAL 3.9K 1% 1/4W	1-215-435-00	RES,METAL 3.9K 1% 1/6W
R119	1-214-153-00	RES,METAL 7.5K 1% 1/4W	1-215-442-00	RES,METAL 7.5K 1% 1/6W
R248	1-214-156-00	RES,METAL 10K 1% 1/4W	1-215-445-00	RES,METAL 10K 1% 1/6W
R21	1-247-863-00	RES,CARBON 22K 5% 1/6W	1-247-855-00	RES,CARBON 10K 5% 1/6W
R129	1-247-867-00	RES,CARBON 33K 5% 1/6W	1-247-866-00	RES,CARBON 30K 5% 1/6W
DM-25 BOARD (BVH-2000PS,2180PS/CARD RACK)				
C115	1-109-539-00	CAP,MICA 150PF 5% 100V	1-109-541-00	CAP,MICA 200PF 5% 100V
SY-79 BOARD (BVH-2000PS,2180PS/CARD RACK)				
C42	1-123-352-00	CAP,ELECT 1 50V	1-124-255-00	CAP,ELECT 1 20% 50V
VM-01 BOARD (BVH-2000PS,2180PS/CN PNL)				
C35	1-108-575-00	CAP,MYLAR 6800PF 5% 50V	1-108-587-00	CAP,MYLAR 0.022 5% 50V

UP TO #34999 (BVH-2000PS) UP TO #10799 (BVH-2180PS)			#35001 & UP (BVH-2000PS) #10801 & UP (BVH-2180PS)	
LA-02 BOARD (BVH-2000PS,2180PS/CN PNL)				
TP102,202,302,402 (for 04,14)	1-423-189-00	TRANSFORMER, INPUT	1-423-260-11	TRANSFORMER, INPUT
AP-12 BOARD (BVH-2000PS,2180PS)				
C116,216,316,416 (for 04,14)	1-107-169-00	CAP,MICA 100PF 10% 50V	1-102-106-00	CAP,CERAMIC 100PF 10% 50V
C521,522,523	NOT IN USE		1-107-158-00	CAP,MICA 30PF 5% 500V

UP TO #34799 (BVH-2000PS) UP TO #10699 (BVH-2180PS)			#34801 & UP (BVH-2000PS) #10701 & UP (BVH-2180PS)	
CA-09 BOARD (BVH-2000PS,2180PS/TTP)				
R138	1-247-831-00	RES,CARBON 1K 5% 1/6W	1-247-839-00	RES,CARBON 2.2K 5% 1/6W
DA-07 BOARD (BVH-2000PS,2180PS/TTP)				
R51	1-247-831-00	RES,CARBON 1K 5% 1/6W	1-247-839-00	RES,CARBON 2.2K 5% 1/6W

UP TO #34899 (BVH-2000PS) UP TO #10699 (BVH-2180PS)			#34901 & UP (BVH-2000PS) #10701 & UP (BVH-2180PS)	
EQ-02 BOARD (BVH-2000PS,2180PS/CARD RACK)				
(EQ-11 BOARD)				
R359	NOT IN USE		1-249-405-11	RES,CARBON 100 5% 1/6W

UP TO #34999 (BVH-2000PS) UP TO #10799 (BVH-2180PS)			#35001 & UP (BVH-2000PS) #10801 & UP (BVH-2180PS)	
DM-25 BOARD (BVH-2000PS,2180PS/CARD RACK)				
R504	1-215-454-00	RES,METAL 24K 1% 1/6W	1-215-452-00	RES,METAL 20K 1% 1/6W
R506	1-215-448-00	RES,METAL 13K 1% 1/6W	1-215-449-00	RES,METAL 15K 1% 1/6W
CD-17 BOARD (BVH-2000PS,2180PS/CARD RACK)				
C150	NOT IN USE		1-107-077-00	CAP,MICA 47PF 5% 50V

UP TO #34999 (BVH-2000PS)
UP TO #10799 (BVH-2180PS)

#35001 & UP (BVH-2000PS)
#10801 & UP (BVH-2180PS)

AP-12 BOARD (BVH-2000PS,2180PS/TTP)

C521,522,523
NOT IN USE.....1-107-158-00 CAP,MICA 30PF 5% 500V

C116,216,316,416 (for 04,14)
1-107-169-00 CAP,MICA 100PF 5% 500V.....1-102-106-00 CAP,MICA 100PF 10% 50V

MD-14 BOARD (BVH-2000PS,2180PS/CARD RACK)

C504	NOT IN USE.....1-109-525-00	CAP,MICA 39PF 5% 100V	
C507	1-107-158-00 CAP,MICA 30PF 5% 500V.....1-107-077-00	CAP,MICA 47PF 5% 50V	
CV4	1-414-256-00 CAP,TRIMMER 20PF.....1-141-260-00	CAP,TRIMMER 60PF	
L8	NOT IN USE.....1-407-186-XX	INDUCTOR,MICRO 4.7 5%	
L9	1-407-182-XX INDUCTOR,MICRO 2.2 5%.....1-407-186-XX	INDUCTOR,MICRO 4.7 5%	
R118	1-247-839-00 RES,CARBON 2.2K 5% 1/6W.....DELETED		
R510	1-247-819-00 RES,CARBON 330 5% 1/6W.....DELETED		
R112	1-247-807-00 RES,CARBON 100 5% 1/6W.....1-247-804-00	RES,CARBON 75 5% 1/6W	
R121	1-247-804-00 RES,CARBON 75 5% 1/6W.....1-247-817-00	RES,CARBON 270 5% 1/6W	
R530	NOT IN USE.....1-247-809-00	RES,CARBON 120 5% 1/6W	
R531	NOT IN USE.....1-249-415-11	RES,CARBON 680 5% 1/6W	
R532	NOT IN USE.....1-249-420-11	RES,CARBON 1.8K 5% 1/6W	

UP TO #35099 (BVH-2000PS)
UP TO #10799 (BVH-2180PS)

#35101 & UP (BVH-2000PS)
#10801 & UP (BVH-2180PS)

CD-17 BOARD (BVH-2000PS,2180PS/CARD RACK)

IC10,12 8-759-745-60 IC NJM4560D.....8-759-145-58 IC UPC4558C

DT-05 BOARD (BVH-2000PS,2180PS/CARD RACK)

TP1,2,3,4,5,6,7,8,9,10
3-657-703-01 TERMINAL,TP.....3-693-032-01 TERMINAL,TP

UP TO #35099 (BVH-2000PS) UP TO #10799 (BVH-2180PS)			#35101 & UP (BVH-2000PS) #10801 & UP (BVH-2180PS)	

CA-09 BOARD (BVH-2000PS,2180PS/TTP)

R140,141				
	1-214-101-00	RES,METAL 51 1% 1/4W	1-215-390-00	RES,METAL 51 1% 1/6W
R10	1-214-133-00	RES,METAL 1.1K 1% 1/4W	1-215-422-00	RES,METAL 1.1K 1% 1/6W
R17	1-214-143-00	RES,METAL 3K 1% 1/4W	1-215-432-00	RES,METAL 3K 1% 1/6W
R42,64	1-214-147-00	RES,METAL 4.3K 1% 1/4W	1-215-436-00	RES,METAL 4.3K 1% 1/6W
R39,62	1-214-151-00	RES,METAL 6.2K 1% 1/4W	1-215-440-00	RES,METAL 6.2K 1% 1/6W
R34,35,36,73,75,76,77				
	1-214-156-00	RES,METAL 10K 1% 1/4W	1-215-445-00	RES,METAL 10K 1% 1/6W
R33	1-214-163-00	RES,METAL 20K 1% 1/4W	1-215-452-00	RES,METAL 20K 1% 1/6W
R18,31	1-214-165-00	RES,METAL 24K 1% 1/4W	1-215-454-00	RES,METAL 24K 1% 1/6W
R9	1-214-166-00	RES,METAL 27K 1% 1/4W	1-215-455-00	RES,METAL 27K 1% 1/6W
R27	1-214-173-00	RES,METAL 51K 1% 1/4W	1-215-462-00	RES,METAL 51K 1% 1/6W

DA-07 BOARD (BVH-2000PS,2180PS/TTP)

R29	1-214-086-00	RES,METAL 12 1% 1/4W	1-215-375-31	RES,METAL 12 1% 1/6W
R80	1-214-133-00	RES,METAL 1.1K 1% 1/4W	1-215-422-00	RES,METAL 1.1K 1% 1/6W
R24	1-214-147-00	RES,METAL 4.3K 1% 1/4W	1-215-436-00	RES,METAL 4.3K 1% 1/6W
R54,55,56,57				
	1-214-156-00	RES,METAL 10K 1% 1/4W	1-215-445-00	RES,METAL 10K 1% 1/6W
R82	1-214-166-00	RES,METAL 27K 1% 1/4W	1-215-455-00	RES,METAL 27K 1% 1/6W
R10	1-214-167-00	RES,METAL 30K 1% 1/4W	1-215-456-00	RES,METAL 30K 1% 1/6W
R7	1-214-169-00	RES,METAL 36K 1% 1/4W	1-215-458-00	RES,METAL 36K 1% 1/6W
R8	1-214-170-00	RES,METAL 39K 1% 1/4W	1-215-459-00	RES,METAL 39K 1% 1/6W

UP TO #35099 (BVH-2000PS) UP TO #10799 (BVH-2180PS)			#35101 & UP (BVH-2000PS) #10801 & UP (BVH-2180PS)	

RA-05 BOARD (BVH-2000PS,2180PS/TTP)

R34,35,69,70,190,191, 224,225	1-214-088-00	RES,METAL 15 1% 1/4W	1-215-377-00	RES,METAL 15 1% 1/6W
R53,54,56,231,232,233	1-214-096-00	RES,METAL 33 1% 1/4W	1-215-385-00	RES,METAL 33 1% 1/6W
R139,145,299,304	1-214-116-00	RES,METAL 220 1% 1/4W	1-215-405-00	RES,METAL 220 1% 1/6W
R143,149,298,308,	1-214-125-00	RES,METAL 510 1% 1/4W	1-215-414-00	RES,METAL 510 1% 1/6W
R290	1-214-133-00	RES,METAL 1.1K 1% 1/4W	1-215-422-00	RES,METAL 1.1K 1% 1/6W
R36,37,39,40,41,42, 196,197,198,199,201, 202	1-214-139-00	RES,METAL 2K 1% 1/4W	1-215-428-00	RES,METAL 2K 1% 1/6W
R52,236	1-214-144-00	RES,METAL 3.3K 1% 1/4W	1-215-433-00	RES,METAL 3.3K 1% 1/6W
R126,254	1-214-146-00	RES,METAL 3.9K 1% 1/4W	1-215-435-00	RES,METAL 3.9K 1% 1/6W
R18,19,20,183,184,185	1-214-148-00	RES,METAL 4.7K 1% 1/4W	1-215-437-00	RES,METAL 4.7K 1% 1/6W
R140,141,144,146,300, 301,303,305	1-214-151-00	RES,METAL 6.2K 1% 1/4W	1-215-440-00	RES,METAL 6.2K 1% 1/6W
R13,14,15,180,181,182	1-214-154-00	RES,METAL 8.2K 1% 1/4W	1-215-443-00	RES,METAL 8.2K 1% 1/6W
R58,74,105,109,114, 120,125,152,155,230, 245,258,260,263,266, 267,296,297	1-214-156-00	RES,METAL 10K 1% 1/4W	1-215-445-00	RES,METAL 10K 1% 1/6W
R77,115,228,256	1-214-158-00	RES,METAL 12K 1% 1/4W	1-215-447-00	RES,METAL 12K 1% 1/6W
R76,229	1-214-160-00	RES,METAL 15K 1% 1/4W	1-215-449-00	RES,METAL 15K 1% 1/6W
R117,259	1-214-162-00	RES,METAL 18K 1% 1/4W	1-215-451-00	RES,METAL 18K 1% 1/6W

UP TO #35099 (BVH-2000PS) UP TO #10799 (BVH-2180PS)			#35101 & UP (BVH-2000PS) #10801 & UP (BVH-2180PS)	
(RA-05 BOARD BVH-2000PS,2180PS/TTP)				
R16,17,22,163,164,166	1-214-164-00	RES,METAL 22K 1% 1/4W	1-215-453-00	RES,METAL 22K 1% 1/6W
R293	1-214-166-00	RES,METAL 27K 1% 1/4W	1-215-455-00	RES,METAL 27K 1% 1/6W
R116,255	1-214-170-00	RES,METAL 39K 1% 1/4W	1-215-459-00	RES,METAL 39K 1% 1/6W
R21,113,142,147,165, 302,306,311	1-214-180-00	RES,METAL 100K 1% 1/4W	1-215-469-00	RES,METAL 100K 1% 1/6W
R79,215	1-214-175-00	RES,METAL 62K 1% 1/4W	1-215-464-00	RES,METAL 62K 1% 1/6W
LG-02(A) BOARD (BVH-2000PS,2180PS/CARD RACK)				
IC1A	NOT IN USE		8-759-900-08	IC SN74LS08N
BE-03 BOARD (BVH-2000PS,2180PS/TTP)				
C20,21,22,23	1-108-603-00	CAP,MYLAR 0.1 5% 50V	1-130-495-00	CAP,MYLAR 0.1 5% 50V
MD-14 BOARD (BVH-2000PS,2180PS/CARD RACK)				
R19,20	1-247-211-00	RES,CARBON 62 5% 1/2W	1-214-835-00	RES,METAL 62 1% 1/2W

UP TO #34799 (BVH-2000PS) UP TO #10699 (BVH-2180PS)			#34801 & UP (BVH-2000PS) #10701 & UP (BVH-2180PS)	
SV-43 BOARD (BVH-2000PS,2180PS/CARD RACK)				
(BVH-2000PS)				
IC1E	8-759-764-37	IC,EPROM,MBM2732-S1U3-7.....	8-759-769-76	IC,EPROM,MBM2732-S1U3-9
(BVH-2180PS)				
IC1E	8-759-765-69	IC,EPROM,MBM2732-S1Q1-2.....	8-759-769-77	IC,EPROM,MBM2732-S1Q1-3
UP TO #34999 (BVH-2000PS) UP TO #10799 (BVH-2180PS)			#35001 & UP (BVH-2000PS) #10801 & UP (BVH-2180PS)	
DM-25 BOARD (BVH-2000PS,2180PS/CARD RACK)				
R519	1-215-457-00	RES,METAL 33K 1% 1/6W.....	1-215-462-00	RES,METAL 51K 1% 1/6W
R517	1-215-469-00	RES,METAL 100K 1% 1/6W.....	1-215-474-00	RES,METAL 160K 1% 1/6W
UP TO #35199 (BVH-2000PS) UP TO #10799 (BVH-2180PS)			#35201 & UP (BVH-2000PS) #10801 & UP (BVH-2180PS)	
CONNECTOR PANEL ASSY (BVH-2000PS,2180PS)				
1pc	3-673-859-02	LABEL,CONNECTOR.....	3-673-859-04	LABEL,CONNECTOR
1pc	3-693-059-01	LABEL(NS) CONNECTOR.....	3-693-059-02	LABEL(NS) CONNECTOR
UP TO #35299 (BVH-2000PS) UP TO #10799 (BVH-2180PS)			#35301 & UP (BVH-2000PS) #10801 & UP (BVH-2180PS)	
E0-02 BOARD (BVH-2000PS,2180PS/CARD RACK)				
(E0-11 BOARD)				
CN1	1-564-929-11	PLUG,DIL 14P.....	1-566-087-11	PLUG,DIL 14P
CN2	1-564-928-11	PLUG,DIL 8P.....	1-566-086-11	PLUG,DIL 8P
AE-03 BOARD (BVH-2000PS,2180PS/CARD RACK)				
R90,92	1-247-863-00	RES,CARBON 22K 5% 1/6W.....	1-249-429-11	RES,CARBON 10K 5% 1/6W
C55	1-136-156-00	RES,FILM 0.018 5% 50V.....	1-136-160-00	CAP,FILM 0.039 5% 50V
UP TO #35399 (BVH-2000PS) UP TO #10799 (BVH-2180PS)			#35401 & UP (BVH-2000PS) #10801 & UP (BVH-2180PS)	
SR-15 BOARD (BVH-2000PS,2180PS/CARD RACK)				
IC5E	8-759-901-63	IC SN74LS163AN,TTL.....	8-759-911-63	IC SN74S163N,TTL

UP TO #35499 (BVH-2000PS) UP TO #10799 (BVH-2180PS)			#35501 & UP (BVH-2000PS) #10801 & UP (BVH-2180PS)	
SY-79 BOARD (BVH-2000PS,2180PS/CARD RACK)				
IC1A	NOT IN USE		8-759-772-32	IC,EPROM,2732-77U3-5
IC1C	8-759-764-20	IC,EPROM,2732-76U3-4	8-759-772-31	IC,EPROM,2732-76U3-5
IC1D	8-759-764-19	IC,EPROM,2732-75U3-3	8-759-772-30	IC,EPROM,2732-75U3-5
IC1E	8-759-764-18	IC,EPROM,2732-74U3-3	8-759-772-29	IC,EPROM,2732-74U3-5
IC1G	8-759-764-17	IC,EPROM,2732-73U3-4	8-759-772-28	IC,EPROM,2732-73U3-5
IC1H	8-759-764-29	IC,EPROM,2732-72U3-1	8-759-772-27	IC,EPROM,2732-72U3-5
IC1K	8-759-764-13	IC,EPROM,2732-70U3-4	8-759-772-25	IC,EPROM,2732-70U3-5
IC1I	8-759-764-15	IC,EPROM,2732-71A3-2	8-759-772-33	IC,EPROM,2732-71A3-5
SY-80 BOARD (BVH-2000PS,2180PS/CARD RACK)				
IC1C	8-759-764-23	IC,EPROM,2732-82U3-3	8-759-772-37	IC,EPROM,2732-82U3-5
IC1D	8-759-764-22	IC,EPROM,2732-81U3-5	8-759-772-36	IC,EPROM,2732-81U3-6
IC1F	8-759-764-21	IC,EPROM,2732-80U3-4	8-759-772-35	IC,EPROM,2732-80U3-5
BE-02 BOARD (BVH-2000PS,2180PS/TTP)				
C32,33	1-109-573-00	CAP,MICA 470PF 5% 500V	1-109-689-00	CAP,MICA 470PF 5% 500V
R80	1-247-823-00	RES,CARBON 470 5% 1/6W	1-215-413-00	RES,METAL 470 1% 1/6W
R420	1-247-094-00	RES,CARBON 30 5% 1/4W	1-214-096-00	RES,METAL 33 1% 1/4W
R75	1-247-871-00	RES,CARBON 47K 5% 1/6W	1-215-461-00	RES,METAL 47K 1% 1/6W
R76	1-247-873-00	RES,CARBON 56K 5% 1/6W	1-215-463-00	RES,METAL 56K 1% 1/6W
R18	1-247-887-00	RES,CARBON 220K 5% 1/6W	1-215-477-00	RES,METAL 220K 1% 1/6W
R102,202,302,402	1-247-893-00	RES,CARBON 390K 5% 1/6W	1-215-415-00	RES,METAL 390K 1% 1/6W
RV10	1-226-277-00	RES,VAR,METAL 10	1-230-834-11	RES,VAR,METAL 10
RV1	1-224-934-00	RES,VAR,METAL 100	1-230-837-11	RES,VAR,METAL 100
RV2,3,4,5	1-224-936-00	RES,VAR,METAL 500	1-230-839-11	RES,VAR,METAL 500
RV9	1-224-936-00	RES,VAR,METAL 20K	1-230-844-11	RES,VAR,METAL 20K
TP10(for 04/14 model) 1,2,3,4,5,6,7,8,9, 11,12,13,14,15,16	3-640-328-00	TERMINAL,TP	3-657-703-01	TERMINAL,TP
FRONT PANEL ASSY (BVH-2000PS,2180PS)				
(BVH-2000PS)				
1pc	A-6004-127-B	PANEL ASSY,REEL	A-6004-127-C	PANEL ASSY,REEL
(BVH-2180PS)				
1pc	A-6004-146-A	PANEL ASSY,REEL	A-6004-146-B	PANEL ASSY,REEL
1pc	3-673-971-00	COVER,CAPSTAN	3-673-971-02	COVER,CAPSTAN

UP TO #35399 (BVH-2000PS) UP TO #10799 (BVH-2180PS)			#35401 & UP (BVH-2000PS) #10801 & UP (BVH-2180PS)	

CD-17 BOARD (BVH-2000PS,2180PS/CARD RACK)

TP3	3-657-703-01	TERMINAL,TP.....	DELETED	

LA-02 BOARD (BVH-2000PS,2180PS/CN PNL)

R42,65	1-247-807-00	RES,CARBON 100 5% 1/6W.....	1-215-396-00	RES,METAL 91 1% 1/6W
R41,64,115,215,317, 417(for 04,14)	1-214-132-00	RES,METAL 1K 1% 1/4W.....	1-215-421-00	RES,METAL 1K 1% 1/6W
R31,54,105,205,305, 405(for 04,14)	1-214-164-00	RES,METAL 22K 1% 1/4W.....	1-215-453-00	RES,METAL 22K 1% 1/6W

UP TO #35699 (BVH-2000PS) UP TO #10799 (BVH-2180PS)			#35701 & UP (BVH-2000PS) #10801 & UP (BVH-2180PS)	

DM-25 BOARD (BVH-2000PS,2180PS/CARD RACK)

SW2A	1-516-925-21	SWITCH,DIP,8-CKT.....	1-570-623-11	SWITCH,DIP,8-CKT
RV1,13	1-224-943-00	RES,VAR,CERMET 100K.....	1-230-846-11	RES,VAR,CERMET 100K
RV3,6,502	1-224-939-00	RES,VAR,CERMET 5K.....	1-230-842-11	RES,VAR,CERMET 5K
RV5,8,16	1-224-936-00	RES,VAR,CERMET 500.....	1-230-839-11	RES,VAR,CERMET 500
RV9	1-228-288-00	RES,VAR,METAL 100.....	1-230-837-11	RES,VAR,METAL 100
RV10,11,15	1-224-941-00	RES,VAR,CERMET 20K.....	1-230-844-11	RES,VAR,CERMET 20K
RV12	1-224-942-00	RES,VAR,CERMET 50K.....	1-230-845-11	RES,VAR,CERMET 50K
RV14	1-224-937-00	RES,VAR,CERMET 1K.....	1-230-840-11	RES,VAR,CERMET 1K
RV501,503	1-224-940-00	RES,VAR,CERMET 10K.....	1-230-843-11	RES,VAR,CERMET 10K

UP TO #35699 (BVH-2000PS) UP TO #10799 (BVH-2180PS)			#35701 & UP (BVH-2000PS) #10801 & UP (BVH-2180PS)	
VM-01 BOARD (BVH-2000PS,2180PS/CN PNL)				
RV1,3	1-224-937-00	RES,VAR,METAL 1K.....	1-230-840-11	RES,VAR,METAL 1K
RV2	1-224-935-00	RES,VAR,METAL 200.....	1-230-838-11	RES,VAR,METAL 200
RV4,6,7,8	1-224-936-00	RES,VAR,METAL 500.....	1-230-839-11	RES,VAR,METAL 500
PS-14 BOARD (BVH-2000PS,2180PS/POWER SUPPLY)				
RV1,2,3,4,5,6,7,8,9, 10,11,12,13	1-224-940-00	RES,VAR,METAL 10K.....	1-230-843-11	RES,VAR,METAL 10K
RA-05 BOARD (BVH-2000PS,2180PS/TTP)				
RV1,6	1-224-939-00	RES,VAR,METAL 5K.....	1-230-842-11	RES,VAR,METAL 5K
RV2,5	1-224-942-00	RES,VAR,METAL 50K.....	1-230-845-11	RES,VAR,METAL 50K
LA-02 BOARD (BVH-2000PS,2180PS/CN PNL)				
RV1,2,101,201,301,401(for 04,14)	1-224-941-00	RES,VAR,METAL 20K.....	1-230-837-11	RES,VAR,METAL 20K
DD-03 BOARD (BVH-2000PS,2180PS/TTP)				
RV1,2	1-228-292-00	RES,VAR,CERMET 2K.....	1-230-841-11	RES,VAR,CERMET 2K
EQ-02 BOARD (BVH-2000PS,2180PS/CARD RACK)				
RV22	1-228-288-00	RES,ADJ,CERMET 100.....	1-230-837-11	RES,ADJ,CERMET 100
RV23,25,28	1-228-293-00	RES,ADJ,CERMET 5K.....	1-230-842-11	RES,ADJ,CERMET 5K
RV24	1-228-294-00	RES,ADJ,CERMET 10K.....	1-230-843-11	RES,ADJ,CERMET 10K
RV30	1-228-295-00	RES,ADJ,CERMET 20K.....	1-230-844-11	RES,ADJ,CERMET 20K

UP TO #35699 (BVH-2000PS) UP TO #10799 (BVH-2180PS)			#35701 & UP (BVH-2000PS) #10801 & UP (BVH-2180PS)	

MD-14 BOARD (BVH-2000PS,2180PS/CARD RACK)

RV2,6,13,21				
	1-224-939-00	RES,VAR,METAL 5K	1-230-842-11	RES,VAR,METAL 5K
RV3,22	1-224-940-00	RES,VAR,METAL 10K	1-230-843-11	RES,VAR,METAL 10K
RV4	1-224-935-00	RES,VAR,METAL 200	1-230-838-11	RES,VAR,METAL 200
RV7	1-224-936-00	RES,VAR,METAL 500	1-230-839-11	RES,VAR,METAL 500
RV5	1-224-937-00	RES,VAR,METAL 1K	1-230-840-11	RES,VAR,METAL 1K

CONNECTOR PANEL ASSY (BVH-2500P)

3pcs	1-509-176-31	RECEP,XLR-3P,MALE	1-509-176-51	RECEPTACLE 3P,MALE
3pcs	1-509-184-31	RECEP,XLR-3P,FEMALE	1-509-184-51	RECEPTACLE 3P,MALE

SR-15 BOARD (BVH-2000PS,2180PS/CARD RACK)

TP1,3,4,17,25				
	3-657-703-01	TERMINAL,TP	3-693-032-01	TERMINAL,TP

UP TO #35499 (BVH-2000PS) UP TO #10799 (BVH-2180PS)			#35501 & UP (BVH-2000PS) #10801 & UP (BVH-2180PS)	

SY-80 BOARD (BVH-2000PS,2180PS/CARD RACK)

IC1F	8-759-772-35	IC, EPROM,2732-80U3-5	8-759-776-20	IC, EPROM,2732-80U3-6

UP TO #35699 (BVH-2000PS) UP TO #10899 (BVH-2180PS)			#35701 & UP (BVH-2000PS) #10901 & UP (BVH-2180PS)	

AP-12 BOARD (BVH-2000PS,2180PS/TTP)

C521,522,523				
	1-107-158-00	CAP,MICA 30PF 5% 500V	DELETED	
C11,12,13				
	NOT IN USE		1-163-168-00	CAP,CHIP CERAMIC 30PF 5% 50V
C511	1-109-677-00	CAP,MICA 150PF 5% 500V	1-107-173-00	CAP,MICA 150PF 5% 500V
C688	1-123-298-00	CAP,ELECT 470 6.3V	1-124-472-11	CAP,ELECT 470 20% 10V
C664,C665 (for 04/14 model) 119,120,219,220,319, 320,504,505,507,508, 604,605,624,625,644, 645	1-123-318-00	CAP,ELECT 33 16V	1-124-896-00	CAP,ELECT 33 20% 16V

UP TO #35699 (BVH-2000PS) UP TO #10899 (BVH-2180PS)			#35701 & UP (BVH-2000PS) #10901 & UP (BVH-2180PS)	
(AP-12 BOARD BVH-2000PS,2180PS/TTP)				
C404,670,673(for 04/14 model) 104,204,304,610,613, 630,633,650,653,684, 685	1-123-332-00	CAP,ELECT 47 25V	1-124-477-11	CAP,ELECT 47 20% 25V
C410,411(for 04/14 model) 1,2,110,111,210,211, 310,311	1-123-333-00	CAP,ELECT 100 25V	1-124-445-00	CAP,ELECT 100 20% 16V
C689	1-123-356-00	CAP,ELECT 10 50V	1-124-907-00	CAP,ELECT 10 20% 50V
RY401(for 04/14 model) 101,201,301	1-515-309-00	RELAY,5V 200-OHM	1-515-518-00	RELAY,5V
RY501	1-515-309-21	RELAY,12V 1K-OHM	1-515-477-00	RELAY,12V
EQ-02 BOARD (BVH-2000PS,2180PS/CARD RACK)				
JP1,2,3 2pcs	1-560-733-00 1-561-832-00	PIN,SHORT PLUG,SHORT	1-566-385-11 1-563-859-11	PIN,CONNECTOR 2P RECEPTACLE,CONNECTOR 2P
MD-14 BOARD (BVH-2000PS,2180PS/CARD RACK)				
JP1,2,3,4,5,6	1-560-733-00	PIN,SHORT	1-566-385-11	PIN,CONNECTOR 2P
JP1,4,5	1-561-832-00	PLUG,SHORT	1-563-859-11	RECEPTACLE,CONNECTOR 2P
LG-02(A) BOARD (BVH-2000PS,2180PS/CARD RACK)				
JP1,2,3,4,5,6,7,8,9	1-560-733-00	PIN,SHORT	1-566-385-11	PIN,CONNECTOR 2P
2pcs	1-561-832-00	PLUG,SHORT	1-563-859-11	RECEPTACLE,CONNECTOR 2P
SY-79 BOARD (BVH-2000PS,2180PS/CARD RACK)				
JP1,2,3,4,5,6	1-560-733-00	PIN,SHORT	1-566-385-11	PIN,CONNECTOR 2P
3pcs	1-561-832-00	PLUG,SHORT	1-563-859-11	RECEPTACLE,CONNECTOR 2P

UP TO #35699 (BVH-2000PS) UP TO #10899 (BVH-2180PS)				#35701 & UP (BVH-2000PS) #10901 & UP (BVH-2180PS)	

LA-02 BOARD (BVH-2000PS,2180PS/CN PNL)

JP101,102,103,104,105, 106,107,201,202,203, 204,205,206,207,301, 302,303,304,305,306, 307	1-560-733-00	PIN,SHORT	1-566-385-11	PIN,CONNECTOR 2P
12pcs	1-561-832-00	PLUG,SHORT	1-563-859-11	RECEPTACLE,CONNECTOR 2P

UP TO #35799 (BVH-2000PS) UP TO #10899 (BVH-2180PS)				#35801 & UP (BVH-2000PS) #10901 & UP (BVH-2180PS)	

LEVEL CONTROL PANEL (BVH-2000PS,2180PS)

1pc	1-520-451-00	METER,VIDEO/RF	1-520-451-12	METER,VIDEO/RF
3pcs	1-520-450-00	METER,VU	1-520-451-12	METER,VU

UP TO #35699 (BVH-2000PS) UP TO #10899 (BVH-2180PS)				#35701 & UP (BVH-2000PS) #10901 & UP (BVH-2180PS)	

SR-15 BOARD (BVH-2000PS,2180PS/CARD RACK)

C112	NOT IN USE		1-107-206-00	CAP,MICA 15PF 5% 500V

UP TO #35799 (BVH-2000PS) UP TO #10899 (BVH-2180PS)				#35801 & UP (BVH-2000PS) #10901 & UP (BVH-2180PS)	

AU-27 BOARD (BVH-2000PS,2180PS/CARD RACK)

C108,208	1-109-553-00	CAP,MICA 470PF 5% 100V	1-130-467-00	CAP,MYLAR 470PF 5% 50V
C119,137,151,219,237, 251	1-109-559-00	CAP,MICA 820PF 5% 100V	1-130-470-00	CAP,MYLAR 820PF 5% 50V

UP TO #35999 (BVH-2000PS) UP TO #10999 (BVH-2180PS)			#36001 & UP (BVH-2000PS) #11001 & UP (BVH-2180PS)	

DM-25 BOARD (BVH-2000PS,2180PS/CARD RACK)

R519	1-215-462-00	RES,METAL 51K 1% 1/6W.....	1-215-464-00	RES,METAL 62K 1% 1/6W
R517	1-215-474-00	RES,METAL 160K 1% 1/6W.....	1-215-476-00	RES,METAL 200K 1% 1/6W

UP TO #35999 (BVH-2000PS) UP TO #11099 (BVH-2180PS)			#36001 & UP (BVH-2000PS) #11101 & UP (BVH-2180PS)	

SY-79 BOARD (BVH-2000PS,2180PS/CARD RACK)

IC1K	8-759-772-25	IC,EPROM,2732-70U3-5.....	8-759-778-55	IC,EPROM,2732-70U3-6
IC1C	8-759-772-31	IC,EPROM,2732-76U3-5.....	8-759-778-56	IC,EPROM,2732-76U3-6

UP TO #36099 (BVH-2000PS) UP TO #11499 (BVH-2180PS)			#36101 & UP (BVH-2000PS) #11501 & UP (BVH-2180PS)	

FRAME (BVH-2000PS,2180PS)

H3	8-825-737-10	HEAD,AUDIO R/P,PA77-5104C.....	8-825-771-01	HEAD PA77-5104F
H4	8-825-737-20	HEAD,AUDIO MONITOR,PA77-5104D.....	8-825-771-01	HEAD PA77-5104F

UP TO #36999 (BVH-2000PS) UP TO #11599 (BVH-2180PS)			#37001 & UP (BVH-2000PS) #11601 & UP (BVH-2180PS)	

SY-79 BOARD (BVH-2000PS,2180PS/CARD RACK)

3pcs	1-563-859-11	RECEPTACLE, CONNECTOR 2P.....	1-565-413-11	RECEPTACLE, CONNECTOR 2P

UP TO #35999 (BVH-2000PS) UP TO #11499 (BVH-2180PS)			#36001 & UP (BVH-2000PS) #11501 & UP (BVH-2180PS)	

BE-03 BOARD (BVH-2000PS-04,14/BVH-2180PS-04,14)

Q17,18,19,20				
	8-729-606-32	TRANSISTOR 2SC2603.....	8-729-600-27	TRANSISTOR 2SC634-7

UP TO #36199 (BVH-2000PS) UP TO #11799 (BVH-2180PS)			#36201 & UP (BVH-2000PS) #11801 & UP (BVH-2180PS)	
DD-03 BOARD (BVH-2000PS, 2180PS/TTP)				
Q4, 8, 9, 12				
	8-763-420-00	TRANSISTOR 2SC1762	8-729-141-78	TRANSISTOR 2SC3632-K
Q5, 16, 17				
	8-765-141-00	TRANSISTOR 2SA911	8-729-118-43	TRANSISTOR 2SA1413-L